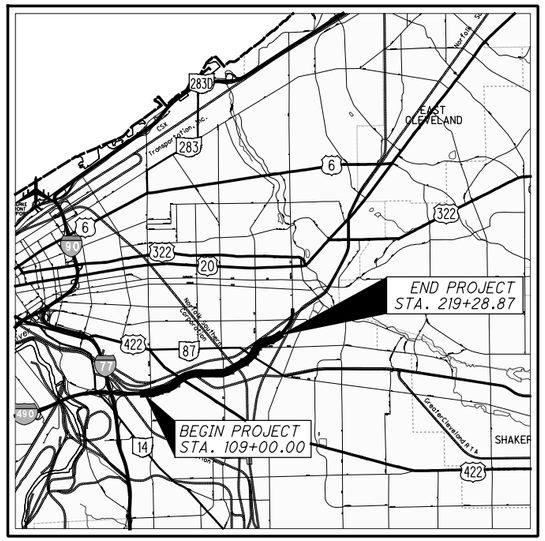

LOCATION MAP

LATITUDE: 41°29'08" LONGITUDE: 81°37'22"

SCALE IN MILES

0 1 2 3 4

N

PORTION TO BE IMPROVED
INTERSTATE HIGHWAY
FEDERAL ROUTES
STATE ROUTES
COUNTY & TOWNSHIP ROADS
OTHER ROADS

DESIGN DESIGNATION

CURRENT ADT (2017)	35,820
DESIGN YEAR ADT (2020)	48,230
DESIGN HOURLY VOLUME (2020)	3,580
DIRECTIONAL DISTRIBUTION	58%
TRUCKS (24 HOUR B&C)	6%
DESIGN SPEED	40 MPH
LEGAL SPEED	35 MPH
DESIGN FUNCTIONAL CLASSIFICATION	URBAN PRINCIPAL ARTERIAL
NHS PROJECT	NO

DESIGN EXCEPTIONS

NONE

UNDERGROUND UTILITIES

CONTACT BOTH SERVICES TWO WORKING DAYS
BEFORE YOU DIG.

OHIO Utilities Protection SERVICE
Call Before You Dig
1-800-362-2764
(Non-members must be called directly)

OIL & GAS PRODUCERS
UNDERGROUND PROTECTION SERVICE
1-800-925-0988

The Kokosing Design-Build Team
Kokosing | Michael Baker | Richland Engineering | Brownstone Grey

ENGINEERS SEAL:
DRAINAGE PLANS:
STATE OF OHIO SEAN MILROY E-66150 REGISTERED PROFESSIONAL ENGINEER
SIGNED: Sean Milroy
DATE: 11/12/2019

ENGINEERS SEAL:
TRACK PLANS:
STATE OF OHIO LAWRENCE P. CIBOREK E-50481 REGISTERED PROFESSIONAL ENGINEER
SIGNED: Lawrence Ciborek
DATE: 11/12/2019

STATE OF OHIO

DEPARTMENT OF TRANSPORTATION

CUY-IR490/SR010-2.09/19.28

CITY OF CLEVELAND

CUYAHOGA COUNTY

INDEX OF SHEETS:

SEE SHEETS 2

BU-17A
GCRTA WYE TRACK

PLAN PREPARED BY:

Michael Baker INTERNATIONAL
1111 SUPERIOR AVENUE EAST, SUITE 2300
CLEVELAND, OHIO 44114

E.L. ROBINSON ENGINEERING
1468 West 9th Street · Cleveland, Ohio 44113
www.elrobinsonengineering.com

ODOT STANDARD CONSTRUCTION DRAWINGS			CITY OF CLEVELAND STANDARD CONSTRUCTION DRAWINGS		ODOT SUPPLEMENTAL SPECIFICATIONS	SPECIAL PROVISIONS
CB-1.1 01/15/16			CB-1 07/08/08		800 07/15/16	ENGINEERED FILL -
CB-2.1 01/15/16			CB-3 07/08/08		863 10/17/14	CELLULAR CONCRETE
CB-2.2 01/15/16			MH-1 07/08/08		902 12/31/12	
MH-1.2 01/15/16			A-503 07/08/08			
MH-1.3 01/18/13			A-605 07/08/08			
DM-1.2 01/18/13			73M 07/08/08			
			146-ME 07/08/08			

ODOT SUPPLEMENTS	GCRTA SPECIAL PROVISIONS
	33 46 00
	34 05 23
	34 11 16
	34 11 26
	34 11 33
	34 11 36

ENGINEERS SEAL:
GEOTECH PLANS:
STATE OF OHIO PETER ALAN NARSAVAGE E-62277 REGISTERED PROFESSIONAL ENGINEER
SIGNED: Peter Narsavage
DATE: 1/27/2020

NO.	DATE	DESCRIPTION
0	2020-01-27	RFC

ISSUE RECORD

PROJECT DESCRIPTION

THIS PROJECT CONSISTS OF THE CONSTRUCTION OF 2.09 MILES OF A NEW TWO- TO THREE-LANE BOULEVARD FROM E. 55TH ST. TO E. 93RD ST. WORK INCLUDES PAVEMENT, RAILROAD, STRUCTURES, DRAINAGE, WATERWORK, LIGHTING, POWER DISTRIBUTION, TRAFFIC CONTROL, LANDSCAPING, AND ADJUSTMENT OF EXISTING UTILITIES.

EARTH DISTURBED AREAS

PROJECT EARTH DISTURBED AREA:	87.2 ACRES
ESTIMATED CONTRACTOR EARTH DISTURBED AREA:	0 ACRES
NOTICE OF INTENT EARTH DISTURBED AREA:	87.2 ACRES

(AREA SERVICED BY COMBINED SEWER)

2016 SPECIFICATIONS

THE STANDARD SPECIFICATIONS OF THE STATE OF OHIO, DEPARTMENT OF TRANSPORTATION, INCLUDING CHANGES AND SUPPLEMENTAL SPECIFICATIONS LISTED IN THE PROPOSAL SHALL GOVERN THIS IMPROVEMENT.

FEDERAL PROJECT NO. E140 (249)
PID NO. 96833
CONSTRUCTION PROJECT NO. 17-3000
RAILROAD INVOLVEMENT NORFOLK SOUTHERN GCRTA
CUY-IR490/SR010-2.09/19.28
RECORD PLANS
RECORD PLANS
RECORD PLANS

BU-17A - GCRTA WYE TRACK
...\BU-17A\96833_GT017.dgn 3/31/2020 4:21:49 PM Jonathan.Shurilla

ISSUE NO.	RECORD DATE	PAGE NO.	SHEET TITLE
0	2020-01-27	1	TITLE SHEET
2	2024-09-10	2	INDEX OF SHEETS
1	2024-09-10	3	GENERAL NOTES
1	2024-09-10	4	STORM SEWER SCHEDULE
1	2024-09-10	5	SEWER SCHEDULE
1	2024-09-10	6	KINGSBURY VALLEY SEWER SCHEMATIC PLAN
1	2024-09-10	7	DRAINAGE PLAN - O.C. BLVD.: STA. 139+25.00 TO STA. 144+00.00
1	2024-09-10	8	DRAINAGE PROFILE - O.C. BLVD.: STA. 139+00.00 TO STA. 144+00.00
1	2024-09-10	9	DRAINAGE PLAN - O.C. BLVD.: STA. 144+00.00 TO STA. 149+00.00
1	2024-09-10	10	DRAINAGE PROFILE - O.C. BLVD.: STA. 144+00.00 TO STA. 149+00.00
1	2024-09-10	11	DRAINAGE PLAN - O.C. BLVD.: STA. 149+00.00 TO STA. 154+00.00
1	2024-09-10	12	DRAINAGE PROFILE - O.C. BLVD.: STA. 149+00.00 TO STA. 154+00.00
2	2024-09-10	13	DRAINAGE PLAN - O.C. BLVD.: STA. 154+00.00 TO STA. 159+00.00
1	2024-09-10	14	DRAINAGE PROFILE - O.C. BLVD.: STA. 154+00.00 TO STA. 159+00.00
0	2020-01-27	15	DRAINAGE PLAN - KINSMAN RD.: BEGIN TO STA. 10+50.00
0	2020-01-27	16	DRAINAGE PROFILE - KINSMAN RD.: BEGIN TO STA. 10+50.00
1	2024-09-10	17	DRAINAGE PLAN - KINSMAN RD.: STA. 10+50.00 TO STA. 16+00.00
1	2024-09-10	18	DRAINAGE PROFILE - KINSMAN RD.: STA. 10+50.00 TO STA. 16+00.00
1	2021-03-03	19	DRAINAGE PLAN - KINSMAN RD.: STA. 16+00.00 TO END
1	2024-09-10	20	DRAINAGE PROFILE - KINSMAN RD.: STA. 16+00.00 TO END
1	2024-09-10	21	DRAINAGE PROFILES - OPPORTUNITY CORRIDOR BLVD.
1	2024-09-10	22	DRAINAGE PROFILES - OPPORTUNITY CORRIDOR BLVD.
2	2024-09-10	23	DRAINAGE PROFILES - BERWICK RD., COLFAX RD., & KINSMAN RD.
1	2024-09-10	24	GRAVITY SANITARY SEWER PROFILES
1	2024-09-10	25	SANITARY STRUCTURE DETAILS - S-26 AND RTA-1
1	2024-09-10	26	SANITARY STRUCTURE DETAILS - S-26A AND S-27A
0	2020-01-27	27	DRAINAGE DETAILS - BLIND CONNECTION
0	2020-01-27	28	DRAINAGE DETAILS - TEST TEE
0	2020-01-27	29	DRAINAGE DETAILS - SANITARY LOWERING
0	2020-01-27	30	DRAINAGE DETAILS - SANITARY ENCASEMENT
0	2020-01-27	31	DRAINAGE DETAILS - MANHOLE DROP
0	2020-01-27	32	DRAINAGE DETAILS - SANITARY SMALL MANHOLE
0	2020-01-27	33	DRAINAGE DETAILS - SANITARY LARGE MANHOLE
0	2020-01-27	34	DRAINAGE TRENCH DETAILS
0	2020-01-27	35	EGG SEWER DETAIL
0	2020-01-27	36	RISER DETAILS
0	2020-01-27	37	GCRTA STANDARD CLEARANCE DIAGRAM
0	2020-01-27	38	GCRTA CONNECTOR AND WYE TRACK TYPICAL SECTIONS
0	2020-01-27	39	TRACK GENERAL NOTES
1	2024-09-10	40	GEOMETRIC PLAN - GCRTA CONNECTOR TRACK AND WYE TRACK
0	2020-01-27	41	PROFILE - GCRTA CONNECTOR TRACK
0	2020-01-27	42	PROFILE - GCRTA WEST WYE TRACK
0	2020-01-27	43	PROFILE - GCRTA EAST WYE TRACK
0	2020-01-27	44	GCRTA GEOMETRY TABLES
1	2024-09-10	45	GRADING PLAN - KINGSBURY VALLEY
1	2024-09-10	46	GEOTECHNICAL NOTES (1 OF 2)
1	2024-09-10	47	GEOTECHNICAL NOTES (2 OF 2)
0	2024-09-10	47A	POST-CONSTRUCTION SETTLEMENT INFORMATION
0	2020-01-27	48	PROFILE - LIGHTWEIGHT FILL ABOVE EX. 108" STORM CULVERT
0	2020-01-27	49	GEOGRID REINFORCEMENT PLAN
1	2024-09-10	50	GEOGRID REINFORCEMENT SECTION
1	2024-09-10	51	GEOTECHNICAL INSTRUMENTATION PLAN
1	2024-09-10	52	CROSS SECTION LAYOUT PLAN
0	2020-01-27	53	CROSS SECTIONS - CONNECTOR TRACK: STA. 99+00.00 TO STA. 99+25.00
0	2020-01-27	54	CROSS SECTIONS - CONNECTOR TRACK: STA. 99+50.00 TO STA. 99+75.00
0	2020-01-27	55	CROSS SECTIONS - CONNECTOR TRACK: STA. 100+00.00
0	2020-01-27	56	CROSS SECTIONS - CONNECTOR TRACK: STA. 100+25.00
0	2020-01-27	57	CROSS SECTIONS - CONNECTOR TRACK: STA. 100+50.00
0	2020-01-27	58	CROSS SECTIONS - CONNECTOR TRACK: STA. 100+75.00
0	2020-01-27	59	CROSS SECTIONS - CONNECTOR TRACK: STA. 101+00.00
0	2020-01-27	60	CROSS SECTIONS - CONNECTOR TRACK: STA. 101+25.00
0	2020-01-27	61	CROSS SECTIONS - CONNECTOR TRACK: STA. 101+50.00
0	2020-01-27	62	CROSS SECTIONS - CONNECTOR TRACK: STA. 101+75.00
0	2020-01-27	63	CROSS SECTIONS - CONNECTOR TRACK: STA. 102+00.00
0	2020-01-27	64	CROSS SECTIONS - CONNECTOR TRACK: STA. 102+25.00 TO STA. 102+50.00
0	2020-01-27	65	CROSS SECTIONS - CONNECTOR TRACK: STA. 102+75.00 TO STA. 103+00.00
1	2024-09-10	66	CROSS SECTIONS - CONNECTOR TRACK: STA. 103+25.00 TO STA. 103+50.00
0	2020-01-27	67	CROSS SECTIONS - CONNECTOR TRACK: STA. 103+75.00
0	2020-01-27	68	CROSS SECTIONS - CONNECTOR TRACK: STA. 104+00.00 TO STA. 104+25.00
0	2020-01-27	69	CROSS SECTIONS - CONNECTOR TRACK: STA. 104+50.00 TO STA. 104+75.00
0	2020-01-27	70	CROSS SECTIONS - CONNECTOR TRACK: STA. 105+00.00 TO STA. 105+25.00
0	2020-01-27	71	CROSS SECTIONS - CONNECTOR TRACK: STA. 105+50.00 TO STA. 105+75.00
1	2024-09-10	72	CROSS SECTIONS - CONNECTOR TRACK: STA. 106+00.00 TO STA. 106+25.00
0	2020-01-27	73	CROSS SECTIONS - CONNECTOR TRACK: STA. 106+50.00 TO STA. 106+75.00
0	2020-01-27	74	CROSS SECTIONS - CONNECTOR TRACK: STA. 107+00.00 TO STA. 107+25.00
0	2020-01-27	75	CROSS SECTIONS - CONNECTOR TRACK: STA. 107+50.00 TO STA. 107+75.00
0	2020-01-27	76	CROSS SECTIONS - CONNECTOR TRACK: STA. 108+00.00 TO STA. 108+25.00
0	2020-01-27	77	CROSS SECTIONS - CONNECTOR TRACK: STA. 108+50.00 TO STA. 108+75.00
0	2020-01-27	78	CROSS SECTIONS - CONNECTOR TRACK: STA. 109+00.00 TO STA. 109+25.00
0	2020-01-27	79	CROSS SECTIONS - CONNECTOR TRACK: STA. 109+50.00 TO STA. 109+75.00
1	2024-09-10	80	CROSS SECTIONS - WYE INTERIOR: STA. 401+00.00 TO STA. 401+25.00
1	2024-09-10	81	CROSS SECTIONS - WYE INTERIOR: STA. 401+50.00 TO STA. 401+75.00
0	2020-01-27	82	CROSS SECTIONS - WYE INTERIOR: STA. 402+00.00
0	2020-01-27	83	CROSS SECTIONS - WYE INTERIOR: STA. 402+25.00
0	2020-01-27	84	CROSS SECTIONS - WYE INTERIOR: STA. 402+50.00
0	2020-01-27	85	CROSS SECTIONS - WYE INTERIOR: STA. 402+75.00
0	2020-01-27	86	CROSS SECTIONS - WYE INTERIOR: STA. 403+00.00
0	2020-01-27	87	CROSS SECTIONS - WYE INTERIOR: STA. 403+25.00
1	2024-09-10	88	CROSS SECTIONS - WYE INTERIOR: STA. 403+50.00
1	2024-09-10	89	CROSS SECTIONS - WYE INTERIOR: STA. 403+75.00 TO STA. 404+00.00
0	2020-01-27	90	CROSS SECTIONS - WYE INTERIOR: STA. 404+25.00 TO STA. 404+50.00
0	2020-01-27	91	CROSS SECTIONS - WYE INTERIOR: STA. 404+75.00 TO STA. 405+00.00
0	2020-01-27	92	CROSS SECTIONS - WYE INTERIOR: STA. 405+25.00 TO STA. 405+50.00
1	2024-09-10	93	CROSS SECTIONS - WYE INTERIOR: STA. 405+75.00 TO STA. 406+00.00
0	2020-01-27	94	CROSS SECTIONS - WYE INTERIOR: STA. 406+25.00 TO STA. 406+50.00
0	2020-01-27	95	CROSS SECTIONS - WYE INTERIOR: STA. 406+75.00
0	2020-01-27	96	GCRTA OTM DETAILS
0	2020-01-27	97	TIMBER PLANK GRADE CROSSING
0	2020-01-27	98	GCRTA WALKWAY DETAIL
0	2020-01-27	99	AREMA SPECIFICATIONS FOR SPECIAL TRACKWORK FOR RAILS 115 LB AND HEAVIER
0	2020-01-27	100	TURNOUT AND CROSSOVER DATA FOR STRAIGHT SPLIT SWITCHES
0	2020-01-27	101	BILLS OF SWITCH TIES FOR TURNOUTS
0	2020-01-27	102	16'-6" SPRING SWITCH
0	2020-01-27	103	DETAILS FOR SWITCH POINTS
0	2020-01-27	104	NO. 6, NO. 7 AND NO. 8 RAIL BOUND MANGANESE STEEL FROGS
0	2020-01-27	105	RADIOGRAPHIC TESTING OF RAIL BOUND MANGANESE STEEL FROG CASTING
0	2020-01-27	106	PERMISSIBLE VARIATIONS IN COMPLETED RBM STEEL FROGS

NO.	DATE	DESCRIPTION
2	2024-09-10	RECORD DRAWINGS
1	2021-03-03	DC052
0	2020-01-27	RFC

ISSUE RECORD

INDEX OF SHEETS

CUY-IR490/ SR010-2.09/19.28

RECORD PLANS

BU-17A - GCRTA WYE TRACK
...\BU-17A\96833_IN017.dgn 12/4/2024 9:59:19 AM Rohit.Bk

CLEVELAND WATER POLLUTION CONTROL
THE CONTRACTOR SHOULD NOTIFY THE DIVISION OF WATER POLLUTION CONTROL (WPC) PRIOR TO START OF CONSTRUCTION OF ANY CITY OF CLEVELAND SEWERS. CALL THE ENGINEERING OFFICE AT (216) 664-2756 OR (216) 664-3638 TO COORDINATE THE SEWER WORK.

THE CONTRACTOR IS REQUIRED TO SUBMIT SEWER SHOP DRAWINGS TO WPC PRIOR TO ANY CITY SEWER INSTALLATION. THE DRAWINGS SHOUD INCLUDE THE SEWER PIPES, MANHOLES, CATCH BASINS AND OTHER SEWER APPURTENANCES.

ANY PROPOSED CITY OF CLEVELAND SEWERS SHOULD BE CONSTRUCTED IN ACCORDANCE TO THE PLANS AND SPECIFICATIONS APPROVED BY WPC. ANY DEVIATIONS FROM THE APPROVED PLANS OR SPECIFICATIONS REQUIRE A NEW PLAN SUBMITTAL REFLECTING THE CHANGES. UPON REVIEW OF THE REVISED ITEMS, WPC WILL RE-ISSUE A NEW APPROVAL. IT IS STRICTLY PROHIBITIED TO CONSTRUCT ANY CITY OF CLEVELAND SEWERS UNLESS THEY ARE APPROVED BY WPC.

UPON COMPLETION OF ANY CITY OF CLEVELAND SEWER INSTALLATION, THE CONTRACTOR IS REQUIRED TO SUBMIT A HARD COPY AND AN ELECTRONIC COPY OF AS-BUILT PLANS, AND A CCTV COPY OF THE NEW CITY SEWERS. WPC RESERVES THE RIGHT NOT TO APPROVE ANY SEWER THAT DOES NOT MEET THE CITY REQUIREMENTS.

ITEM 611 - CATCH BASIN, NO. 2-2A, AS PER PLAN
CATCH BASINS, NO. 2-2A, SHALL BE CONSTRUCTED IN ACCORDANCE WITH O.D.O.T. STANDARD DETAIL CB-1.1 WITH THE ADDITION OF A 6" TRAP AND 2' SUMP.

ITEM 611 - CATCH BASIN, NO. 2-2B, AS PER PLAN
CATCH BASINS, NO. 2-2B, SHALL BE CONSTRUCTED IN ACCORDANCE WITH O.D.O.T. STANDARD DETAIL CB-1.1 WITH THE ADDITION OF A 6" TRAP AND 2' SUMP.

ITEM 611 - CATCH BASIN, NO. 3A, AS PER PLAN
CATCH BASINS, NO. 3A SHALL BE CONSTRUCTED IN ACCORDANCE WITH O.D.O.T. STANDARD DETAIL CB-2.2 WITH THE ADDITION OF A 6" TRAP AND 2' SUMP.

ITEM 611 - CATCH BASIN, NO. 6, AS PER PLAN
CATCH BASINS, NO. 6, SHALL BE CONSTRUCTED IN ACCORDANCE WITH O.D.O.T. STANDARD DETAIL CB-2.3 WITH THE ADDITION OF A 6" TRAP AND 2' SUMP.

ITEM 611 - MANHOLE, NO. 3, AS PER PLAN
MANHOLE NO. 3, SHALL BE CONSTRUCTED IN ACCORDANCE WITH O.D.O.T. STANDARD DETAIL MH-1.2 WITH THE CITY OF CLEVELAND MH-1 FRAME AND LID.

CITY OF CLEVELAND STANDARD DRAWINGS
THE APPLICABLE STANDARD DRAWINGS AND DETAILS OF THE CITY OF CLEVELAND HAVE BEEN INCORPORATED AS MISCELLANEOUS DETAILS, WATERWORK DETAILS AND POWER DISTRIBUTION DETAILS WITHIN THE PLAN SET. INSTALL ALL CONDUIT ON CITY-MAINTAINED SEWERS IN COMPLIANCE WITH CITY OF CLEVELAND STANDARD DRAWING 146-ME. THESE DRAWINGS AND DETAILS REPRESENT THE MOST CURRENT VERSIONS APPROVED BY THE CITY OF CLEVELAND AND HAVE BEEN INCLUDED TO DEPICT THE INTENT OF THE PARTICULAR CONSTRUCTION FEATURES, HOWEVER THEY HAVE NOT BEEN UPDATED FOR CONFORMANCE WITH THE 2016 ODOT CMS. WHEN REFERENCES TO NON-CURRENT CMS ITEMS ARE ENCOUNTERED WITHIN THE DETAILS (I.E. "ITEM 604" OR "CLASS C CONCRETE") THE CURRENT SECTION OF THE CMS (I.E. "ITEM 611 OR "CLASS QC-1 CONCRETE") SHALL APPLY. INTERPRETATIONS REGARDING THE APPLICABLE SECTIONS OF THE 2016 CMS SHALL BE AT THE DIRECTION OF THE ENGINEER.

ITEM 611 - CATCH BASIN, NO. 2-3, AS PER PLAN
CATCH BASINS, NO. 2-3, SHALL BE CONSTRUCTED IN ACCORDANCE WITH O.D.O.T STANDARD DETAIL CB-1.2 WITH THE ADDITION OF A HANGING TRAP FOR AN 18" CONDUIT.

GENERAL DRAINAGE REQUIREMENTS
THE DBT SHALL REMOVE SEDIMENT AND DEBRIS FROM EXISTING DRAINAGE CONDUITS (MAINLINE AND LATERAL STORM AND COMBINED SEWERS) AND DRAINAGE STRUCTURES AS FOLLOWS:

1. ANY DRAINAGE STRUCTURE TO WHICH THE DBT CONNECTS

2. ANY DRAINAGE STRUCTURE RECEIVING RUNOFF DURING CONSTRUCTION FROM AREAS DISTURBED BY THE WORK.

3. THE ADJACENT DRAINAGE CONDUIT EXTENDING FROM THE STRUCTURE IDENTIFIED IN CONDITIONS (1) OR (2) TO THE NEXT DOWNSTREAM DRAINAGE STRUCTURE.

4. ALL MATERIALS REMOVED SHALL BE DISPOSED OF AS PER C&MS 105.16 AND 105.17.

NEW CONNECTIONS TO REINFORCED CONCRETE OR VITRIFIED CLAY PIPE SHALL HAVE A MANUFACTURED BOOT THAT MAKES A WATERTIGHT CONNECTION.

ITEM SPECIAL - FILL AND PLUG EXISTING CONDUIT
THIS ITEM SHALL CONSIST OF THE CONSTRUCTION OF BULKHEADS IN EXISTING CONDUITS AND FILLING THE INSIDE AREA TO SEAL THE CONDUITS OFF WITH ITEM 613, SAND OR OTHER MATERIAL APPROVED BY THE ENGINEER.

PIPES 10 INCHES THROUGH 24 INCHES IN DIAMETER OR RISE WITH LESS THAN 3 FEET OF FINAL COVER SHALL BE REMOVED; WITH MORE THAN 3 FEET OF FINAL COVER THEY MAY BE ABANDONED IN PLACE BY FILLING AND PLUGGING. PRIOR TO FILLING AND PLUGGING, CONDUIT SHALL BE VIDEOTAPED TO ENSURE THAT UNKNOWN CONNECTIONS ARE NOT IMPACTED.

BULKHEADS SHALL BE LOCATED AT THE LIMITS OF THE AREA TO BE FILLED AS INDICATED ON THE PLANS. THE BULKHEADS SHALL CONSIST OF BRICK OR CONCRETE MASONRY WITH A MINIMUM THICKNESS OF 12 INCHES.

THE FILL MATERIAL SHALL BE PUMPED INTO PLACE, OR PLACED BY OTHER MEANS APPROVED BY THE ENGINEER, SO THAT, AFTER SETTLEMENT, AT LEAST 90 PERCENT OF THE CROSS SECTIONAL AREA OF THE CONDUIT, FOR ITS ENTIRE LENGTH, SHALL BE FILLED. THE LENGTH OF FILLED AND PLUGGED CONDUIT TO BE PAID FOR SHALL BE THE ACTUAL NUMBER OF FEET (MEASURED ALONG THE CENTERLINE OF EACH CONDUIT FROM OUTER FACE TO OUTER FACE OF BULKHEADS) FILLED AND PLUGGED AS DESCRIBED ABOVE.

THE LENGTH, MEASURED AS PROVIDED ABOVE, SHALL BE PAID FOR AT THE CONTRACT PRICE PER FOOT FOR, ITEM SPECIAL, FILL AND PLUG EXISTING CONDUIT.

UNRECORDED STORM WATER DRAINAGE
FURNISH A CONTINUANCE FOR ALL UNRECORDED STORM WATER DRAINAGE, SUCH AS ROOF DRAINS, FOOTER DRAINS, OR YARD DRAINS, DISTURBED BY THE WORK. FURNISH EITHER AN OPEN CONTINUANCE OR AN UNOBSTRUCTED CONTINUANCE BY CONNECTING A CONDUIT THROUGH THE CURB OR INTO A DRAINAGE STRUCTURE. THE LOCATION, TYPE, SIZE AND GRADE OF THE NEEDED CONDUIT TO REPLACE OR EXTEND AN EXISTING DRAIN WILL BE DETERMINED BY THE ENGINEER.

PIPE TO MANHOLE JOINT SEALING
THE SPACE BETWEEN CONDUIT AND STRUCTURE PIPE HOLES AND/OR STRUCTURE DOGHOUSE OPENINGS WILL BE GROUTED WITH NON-SHRINK GROUT.

UNRECORDED ACTIVE SANITARY SEWER CONNECTIONS
FURNISH A CONTINUANCE FOR ALL UNRECORDED ACTIVE SANITARY SEWER CONNECTIONS SUCH AS SANITARY, WASTEWATER, CURTAIN/GRADIENT DRAINS, AND FOUNDATION FLOOR DRAINS DISTURBED BY THE WORK. FURNISH AN UNOBSTRUCTED CONTINUANCE OF THE UNRECORDED ACTIVE SANITARY SEWER CONNECTIONS TO THE SATISFACTION OF THE ENGINEER. ALL SANITARY AND SANITARY WASTEWATER CONTINUANCE MAY REQUIRE A NPDES PERMIT FROM THE OHIO ENVIRONMENTAL PROTECTION AGENCY. REPORT ALL CONTINUANCE TO THE LOCAL HEALTH DEPARTMENT.

MISCELLANEOUS METALS
FOR ADJUSTMENT OR REPLACEMENT OF EXISTING DRAINAGE STRUCTURE CASTINGS TO BE RETAINED IN THE ROADWAYS, A CONTINGENCY QUANTITY OF 25,000 POUNDS OF MISCELLANEOUS METAL PER CMS 611 HAS BEEN INCLUDED WITHIN THE LUMP SUM BID FOR DRAINAGE WORK. THIS WORK SHALL BE AS DIRECTED BY THE DEPARTMENT. IF THE QUANTITY EXCEEDS 25,000 POUNDS, THE DEPARTMENT WILL PAY THE ADDITIONAL QUANTITIES IN ACCORDANCE WITH THE CONTRACT.

EXISTING CASTINGS
CASTINGS TO REMAIN AFTER EXISTNG ROADWAY AND PAVEMENT REMOVALS SHALL BE RAISED TO 1.0' ABOVE THE FINISHED GRADE UNLESS ADJACENT TO PAVED AREAS.

UNLESS OTHERWISE SPECIFIED IN THESE PLANS, IN AREAS OF PAVMENT REMOVAL, THE PAVEMENT AND BASE COURSE REMOVAL WILL BE FILLED AS NECESSARY TO REESTABLISH EXISTING GRADE. THIS WILL INCLUDE 4" OF TOPSOIL AND SEEDING TO MEET EXISTING GRADE.

TRENCH BACKFILLING
UNLESS OTHERWISE SPECIFIED, ALL BACKFILLING OF TRENCHES WITHIN PAVEMENT LIMITS, WITH THE EXCEPTION OF UNDERDRAINS, SHALL BE BACKFILLED TO THE TOP OF THE TRENCH OR BOTTOM OF SUBGRADE, WHICHEVER IS LOWER, WITH LOW STRENGTH MORTAR (LSM) PER CITY OF CLEVELAND SPECIFICATIONS. LSM SHALL CONSIST OF THE FOLLOWING:

CEMENT (ASTM C-150, TYPE I): 50 LBS

SAND (PER C&MS 703.03, SSD): 2475 LBS

WATER: 25 GALLONS

ADMIXTURE (AIR): 3 OZ.

APPROVED ADMIXTURES: MASTER BUILDERS-RHEOFILL, AXIM-FLOW AIR, W.R. GRACE-DARAFILL (AN EQUAL MAY BE USED ONLY WITH DEPARTMENT APPROVAL)

USE OF FLY ASH, SPENT FOUNDRY SAND OR CORE SAND IS STRICTLY PROHIBITED.

ITEM SPECIAL - PRE AND POST CONSTRUCTION VIDEOTAPING
EXISTING TRUNK SEWERS IMPACTED BY THE ZONE OF INFLUENCE OF CONSTRUCTION ACTIVITY SHALL BE VIDEO INSPECTED PER C&MS 611 TWICE IN THE COURSE OF THIS PROJECT: FIRST, BEFORE CONSTRUCTION BEGINS; AND SECOND, AFTER CONSTRUCTION IS COMPLETED AND PRIOR TO FINAL ACCEPTANCE OF THE WORK. CONSTRUCTION ACTIVITY AS IT RELATES TO STORM SEWER INSPECTION SHALL BE DEFINED AS RETAINING WALL, BRIDGE, OR ROADWAY CONSTRUCTION ACTIVITY CROSSING OR ADJACENT TO AN EXISTING STORM OR COMBINED SEWER. THE ZONE OF INFLUENCE AREAS SHALL BE DETERMINED BY THE DBT AND APPROVED BY THE GOVERNING AGENCY. THE VIDEO INSPECTION REQUIREMENT SHALL APPLY TO ALL IMPACTED TRUNK SEWERS REGARDLESS OF SIZE, DEPTH, OR TYPE.

UNLESS OTHERWISE SPECIFIED IN THIS SCOPE DOCUMENT, VIDEO INSPECTION LIMITS SHALL INCLUDE THE LENGTH OF SEWER WITHIN THE INFLUENCE AREA AND EXTEND 50 FEET UPSTREAM AND DOWNSTREAM BEYOND THE INFLUENCE AREA LIMITS. VIDEO INSPECTION LIMITS SHALL BE APPROVED BY THE DEPARTMENT AND THE MAINTAINING AGENCY OF THE SEWER PRIOR TO COMMENCEMENT OF WORK. THE DBT SHALL PROVIDE DVD COPIES OF ALL VIDEO/INSPECTION REPORTS TO THE DEPARTMENT OF ALL INSPECTIONS PERFORMED.

SEWERS TO BE VIDEO INSPECTED SHALL BE CLEANED TO FACILITATE THE VIDEO INSPECTION.

SANITARY
ROOF DRAINS, FOUNDATION DRAINS, AND OTHER CLEAN WATER CONNECTIONS TO THE SANITARY SEWER SYSTEM ARE PROHIBITED.

ALL SANITARY SEWERS 18" DIAMETER AND SMALLER SHALL BE CLAY PIPE PER ASTM C-700, JOINTS PER ASTM C-425 AND INSTALLED PER ASTM C-12. ALL SANITARY SEWERS SHALL PASS THE AIR-ACCEPTANCE PRIOR TO ACCEPTANCE BY THE CITY OF CLEVELAND. THIS APPLIES TO ALL PROPOSED SANITARY SEWERS OF 18" DIAMETER AND SMALLER. TESTING OF THE SANITARY SEWER SHALL MEET ASTM C-828 REQUIREMENTS.

ALL PROPOSED CONDUIT 21" AND LARGER SHALL BE REINFORCED CONCRETE PIPE WITH PREMIUM JOINTS (CMS 706.02 & 706.11).

WHERE INLET AND OUTLET PIPES CONNECT TO MANHOLES, A FLEXIBLE WATERTIGHT JOINT IS REQUIRED. FLEXIBLE MANHOLE CONNECTIONS SHALL MEET ASTM C-923. PRECAST MANHOLE CONSTRUCTION SHALL MEET ASTM C-478 WITH JOINTS PER ASTM C-443. ALL NEW SEWER MANHOLES SHALL BE VACUUM TESTED IN ACCORDANCE WITH THE PROCEDURES OF ASTM C-1244.

ALL SANITARY SEWERS AND APPURTENANCES SHALL BE CONSTRUCTED IN STRICT ACCORDANCE WITH THESE PLANS, THE CURRENT STANDARDS AND SPECIFICATIONS OF THE NORTHEAST OHIO REGIONAL SEWER DISTRICT AND CITY OF CLEVELAND, AND IN ACCORDANCE WITH THE CURRENT UNIFORM STANDARDS FOR SEWERAGE IMPROVEMENTS.

UNDERDRAINS, TYPE F CONDUIT
WHEN A PIPE UNDERDRAIN SPANS THE TRENCH OF A LOWER CONDUIT (UTILITY, STORM SEWER, ETC.) AND THE VERTICAL DISTANCE BETWEEN THE LOWER CONDUIT AND THE UNDERDRAIN IS LESS THAN OR EQUAL TO 12 INCHES, TYPE F CONDUIT SHALL BE USED TO SPAN THE LOWER TRENCH. USE A MINIMUM OF 10 FEET OF THE TYPE F CONDUIT, CENTERED OVER THE LOWER TRENCH.

OWNERSHIP AND MAINTENANCE RESPONSIBILITY
ONCE CONSTRUCTION IS COMPLETE, ALL STORM, SANITARY, AND COMBINED SEWERS DEPICTED IN THESE PLANS SHALL BE OWNED AND MAINTAINED BY THE CITY OF CLEVELAND, DEPARTMENT OF WATER POLLUTION CONTROL, UNLESS NOTED OTHERWISE IN THE PLANS.

NORTH EAST OHIO REGIONAL SEWER DISTRICT (NEORSD)
THE CONTRACTOR IS RESPONSIBLE FOR OBTAINING ANY AND ALL PERMITS REQUIRED FOR THE WORK.

A 72-HOUR NOTICE SHALL BE PROVIDED TO MAINTENACE SERVICES - TECHNICAL SUPPORT AT PERMITS@NEORSD.ORG TO SCHEDULE AN NEORSD INSPECTOR FOR THE CONNECTION TO NEORSD OWNED SEWERS.

REFERENCE:
BU-10 FOR WATER LINES
BU-11 FOR CPP DUCT BANKS
BU-14 FOR ROADWAY & PAVEMENT FROM KINGSBURY BRIDGE WEST
BU-15 FOR ROADWAY & PAVEMENT FROM KINGSBURY BRIDGE EAST
BU-27 FOR STREET LEVEL LIGHTING

SEE BUILDABLE UNITS BU-17, BU-18 FOR ADDITIONAL INFORMATION

NO.	DATE	DESCRIPTION
1	2024-09-10	RECORD DRAWINGS
0	2020-01-27	RFC

ISSUE RECORD

CALCULATED SM
CHECKED DAB

RECORD PLANS

GENERAL NOTES

RECORD PLANS

CUY-IR490/SR010-2.09/19.28

BU-17A - GCRTA WYE TRACK
...\BU-17A\96833_GN501.dgn 12/4/2024 4:11:04 PM Gregory.Hertler

Ref. No.	Station	Offset (ft)	Side	Alignment	604/605 Item	Grate/Rim Elev.	603 Item				Upstream		Downstream		
							Size (in)	Type	Length	Slope (%)	Ref. No.	Invert	Ref. No.	Invert	
D-155	12+50.00	0.00	-	BERWICK	MH-1	674.57	-	-	-	-	D-155	-	-	-	EX. CS MH - RTG
D-157A	141+20.88	202.01	LT	OC	-	623.50	12	A	35	0.57	D-157A	623.50	D-157B	623.30	GCRTA OWNERSHIP
D-157B	141+36.55	232.81	LT	OC	-	623.30	12	A	-	-	-	-	-	-	GCRTA OWNERSHIP
D-157C	140+90.00	264.11	LT	OC	-	623.60	12	A	49	0.61	D-157C	623.60	D-157D	623.30	GCRTA OWNERSHIP
D-157D	141+39.00	233.50	LT	OC	-	623.30	12	A	-	-	-	-	-	-	GCRTA OWNERSHIP
D-158	141+80.00	21.00	LT	OC	CB-1	667.97	12	B	12.0	4.83	D-158	663.97	D-158C	663.39	
D-158A	141+00.00	23.66	LT	OC	CB-1	668.37	12	B	75.0	1.76	D-158A	664.10	D-158C	662.78	
D-158B	141+75.00	48.00	RT	OC	CB-3	667.63	12	B	12.0	0.67	D-158B	663.38	D-159B	663.30	
D-158C	141+75.00	10.00	LT	OC	MH-1	668.27	12	B	46.0	1.04	D-158C	662.78	D-159B	662.30	
D-159	142+22.00	48.00	RT	OC	CB-1	667.40	12	B	50.0	1.78	D-159	663.20	D-159B	662.31	
D-159A	141+00.00	48.00	RT	OC	CB-1	667.89	12	B	78.0	1.24	D-159A	663.89	D-159B	662.92	
D-159B	141+75.00	36.00	RT	OC	MH-1	667.86	12	B	83.0	0.96	D-159B	657.67	D-160A	656.87	
D-159C	141+43.00	77.00	RT	OC	CB-2-2B, APP	667.95	12	C	87.0	1.05	D-159C	659.56	D-160A	658.65	
D-159D	139+46.00	63.50	RT	OC	CB-2-2A, APP	670.20	12	B	208.0	3.08	D-159D	665.97	D-159C	659.56	
D-160	145+60.00	95.00	RT	OC	MH-1	667.42	24	C	78.0	1.45	D-160	652.56	D-161D	651.43	
D-160A	142+20.00	104.00	RT	OC	MH-1	668.42	12	C	55.0	1.82	D-160A	656.87	D-161C	655.87	
D-160B	144+02.00	92.65	RT	OC	MH-1	626.21	30	B	5.0	1.00	D-160B	607.74	EXIST	607.69	CONNECT TO EX. 108" X 108" KINGSBURY CULVERT
D-160C	144+31.00	128.45	RT	OC	CB-2-2B, APP	625.10	12	C	48.0	11.88	D-160C	621.10	D-160B	615.40	GCRTA OWNERSHIP
D-160D	142+98.00	148.21	LT	OC	CB-2-3, APP	622.00	18	B	60.0	3.18	D-160D	616.50	D-160E	614.59	GCRTA OWNERSHIP
D-160E	143+37.00	99.86	LT	OC	MH-1	626.70	-	-	-	-	D-160E	-	-	-	GCRTA OWNERSHIP - EX. MH - RTG
D-160F	143+79.54	98.25	LT	OC	CB-2-2B, APP	625.30	12	C	39.0	1.00	D-160F	620.00	D-160E	619.61	GCRTA OWNERSHIP
D-161	149+00.00	20.00	LT	OC	MH-1	673.32	12	B	55.0	1.02	D-161	665.78	D-168A	665.22	
D-161A	143+41.81	93.10	RT	OC	MH-1	627.00	12	B	65.0	3.66	D-161A	622.00	D-160B	619.62	
D-161B	144+42.86	91.17	RT	OC	MH-1	634.50	24	C	44.0	5.80	D-161B	622.55	D-160B	620.00	
D-161C	142+70.55	97.84	RT	OC	MH-1	660.50	12	F	77.0	43.60	D-161C	655.57	D-161A	622.00	
D-161D	144+86.17	91.22	RT	OC	MH-1	657.50	24	F	47.0	46.04	D-161D	651.14	D-161B	629.50	
D-162	145+61.00	36.00	RT	OC	MH-1	665.87	24	B	59.0	2.49	D-162	654.03	D-160	652.56	
D-162A	146+23.00	48.00	RT	OC	CB-1	665.80	12	B	52.0	0.79	D-162A	661.31	D-163	660.90	
D-162B	145+93.00	89.00	RT	OC	CB-2-2B, APP	665.60	12	C	32.0	1.13	D-162B	661.25	D-160	660.89	
D-163	145+70.00	48.00	RT	OC	CB-3	665.61	12	B	15.0	1.73	D-163	660.90	D-162	660.64	
D-164	145+25.00	48.00	RT	OC	CB-1	665.83	12	B	39.0	1.26	D-164	661.44	D-162	660.95	
D-165	145+70.00	23.70	LT	OC	CB-3	666.09	12	B	60.0	1.30	D-165	661.38	D-162	660.60	
D-165A	145+16.00	21.90	LT	OC	CB-1	666.32	12	B	54.0	1.13	D-165A	662.08	D-165	661.47	
D-166	146+30.00	25.70	LT	OC	CB-1	666.30	12	B	61.0	1.52	D-166	662.31	D-165	661.38	
D-167	147+50.00	47.00	RT	OC	CB-1	668.05	12	B	12.0	4.58	D-167	664.05	D-168	663.50	
D-167A	149+00.00	85.00	RT	OC	CB-2-2B, APP	672.75	12	B	50.0	1.98	D-167A	666.61	D-168A	665.62	
D-168	147+50.00	35.00	RT	OC	MH-1	668.29	24	B	186.0	2.48	D-168	662.02	D-162	657.41	
D-168A	149+00.00	35.00	RT	OC	MH-1	673.02	24	B	148.0	1.49	D-168A	664.22	D-168	662.02	
D-169	150+40.00	41.00	RT	OC	MH-1	676.04	24	B	138.0	1.05	D-169	665.67	D-168A	664.22	
D-169A	148+50.00	32.00	LT	OC	CB-1	671.49	12	B	52.0	1.27	D-169A	667.04	D-161	666.38	
D-169B	149+50.00	47.00	RT	OC	CB-1	674.35	12	B	50.0	3.60	D-169B	670.35	D-168A	668.55	
D-169C	147+60.50	99.50	RT	OC	CB-1	668.50	12	B	12.0	0.83	D-169C	664.50	D-169D	664.40	
D-170	11+30.00	23.00	RT	Kinsman	CB-1	675.85	12	B	50.0	2.86	D-170	671.85	D-171	670.42	
D-171	11+80.00	24.00	RT	Kinsman	MH-1	675.81	12	B	101.0	1.61	D-171	668.83	D-169	667.20	
D-172	11+72.00	24.00	LT	Kinsman	CB-1	675.73	12	DUCTILE IRON	48.0	2.88	D-172	670.21	D-171	668.83	
D-173	151+75.00	48.00	RT	OC	CB-1	674.68	12	B	40.0	0.55	D-173	670.21	D-178	669.99	
D-175	151+70.00	32.00	LT	OC	CB-1	674.92	12	B	47.0	0.83	D-175	670.84	D-176	670.45	
D-176	152+16.00	33.53	LT	OC	CB-3	674.72	12	B	69.0	1.10	D-176	670.35	D-179	669.59	
D-177	152+75.00	35.50	LT	OC	CB-1	674.95	12	B	60.0	0.78	D-177	670.82	D-176	670.35	
D-178	152+16.00	48.00	RT	OC	CB-3	674.44	12	B	12.0	0.50	D-178	669.99	D-179	669.93	
D-179	152+16.00	36.00	RT	OC	MH-1	674.68	24	B	173.0	1.65	D-179	668.53	D-169	665.67	

Totals		
City of Cleveland MH-1	19	EA
City of Cleveland CB-1	27	EA
City of Cleveland CB-3	7	EA
Item 611, ODOT MH-3, APP	6	EA
CS Doghouse Manhole	2	EA
Item 611, CB-2-2B, APP	7	EA
Item 611, CB-2-2A, APP	1	EA
Item 611, 4" Conduit, Type C	10	FT
Item 611, 12" Conduit, Type A	84	FT
Item 611, 12" Conduit, Type B	2127	FT
Item 611, 12" Conduit, Type C	321	FT
Item 611, 12" Conduit, Type F	77	FT
Item 611, 12" Conduit, Ductile Iron	71	FT
Item 611, 15" Conduit, Type B	246	FT
Item 611, 18" Conduit, Type B	60	FT
Item 611, 21" Conduit, Type B	181	FT
Item 611, 24" Conduit, Type B	704	FT
Item 611, 24" Conduit, Type C	106	FT
Item 611, 24" Conduit, Type F	63	FT
Item 611, 30" Conduit, Type B	5	FT
Item 611, 48" Conduit, Type C	410	FT
Item 611, 60" Conduit, Type B	96	FT
Item 611, 66" Conduit, Type B	377	FT
Item 611, 66" Conduit, Type C	117	FT
Item 611, Drainage Structure, Misc.: Tee with Cleanout	1	EA
Item 611, Manhole Reconstruct to Grade	6	EA
Item 611, Manhole Adjust to Grade	6	EA

NO.	DATE	DESCRIPTION
1	2024-09-10	RECORD DRAWINGS
0	2020-01-27	RFC

ISSUE RECORD

CALCULATED JTS
CHECKED SM

RECORD PLANS

STORM SEWER SCHEDULE

RECORD PLANS

CUY-IR490/ SR010-
2.09/ 19.28

RECORD PLANS

BU-17A - GCRTA WYE TRACK
...\Sheets\BU-17A\96833_DS001.dgn 12/4/2024 9:59:38 AM Rohit.Bk

Ref. No.	Station	Offset (ft)	Side	Alignment	604/605 Item	Grate/Rim Elev.	603 Item				Upstream		Downstream		
							Size (in)	Type	Length	Slope (%)	Ref. No.	Invert	Ref. No.	Invert	
D-180	152+75.00	48.00	RT	OC	CB-1	674.70	12	B	58.0	0.74	D-180	670.26	D-178	669.83	
D-182	154+00.00	42.00	RT	OC	MH-1	676.86	21	B	181.0	0.57	D-182	669.82	D-179	668.78	
D-182A	154+06.00	48.00	RT	OC	CB-1	676.85	12	B	8.0	2.25	D-182A	672.85	D-182	672.67	
D-182B	154+00.00	90.00	RT	OC	CB-2-2B, APP	678.50	12	B	48.0	0.69	D-182B	670.90	D-182	670.57	
D-183	155+80.00	48.00	RT	OC	CB-1	680.03	12	B	12.0	1.92	D-183	675.86	D-184	675.63	
D-184	155+80.00	36.00	RT	OC	MH-1	680.27	15	B	177.0	2.59	D-184	675.05	D-182	670.47	
D-185	155+80.00	37.00	LT	OC	CB-1	680.31	12	B	73.0	1.11	D-185	676.11	D-184	675.30	
D-191	13+80.00	23.00	RT	Kinsman	CB-1	675.97	12	B	31.0	1.16	D-191	671.85	D-191A	671.49	
D-191A	13+50.00	21.00	RT	Kinsman	MH-1	675.80	15	B	69.0	1.28	D-191A	667.30	D-169	666.42	
D-192	13+97.00	24.00	LT	Kinsman	CB-1	676.05	12	B	65.0	0.85	D-192	671.78	D-191A	671.23	
D-194	15+25.00	23.00	RT	Kinsman	CB-1	677.46	12	B	27.0	10.00	D-194	668.67	EXIST	665.97	DIRECT CONNECTION - No. 10 CS
D-196	16+75.00	22.56	RT	Kinsman	CB-1	678.25	12	B	77.0	1.00	D-196	674.15	D-197	673.38	
D-197	17+47.26	3.75	LT	Kinsman	MH-1	679.01	-	-	-	-	D-197	-	-	-	EX. CS MH - ATG
D-197B	10+30.00	12.74	RT	E. 69th	CB-3	678.27	12	B	31.0	9.74	D-197B	673.70	D-197	670.68	
D-198	17+74.00	20.73	RT	Kinsman	CB-1	678.81	12	B	36.0	1.00	D-198	674.26	D-197	673.90	
D-199	18+60.00	19.18	RT	Kinsman	CB-1	679.29	12	B	85.0	1.00	D-199	675.29	D-198	674.44	
Service Line	149+00.00	50.00	LT	OC	-	-	12	B	30.0	2.97	BEGIN	666.67	D-161	665.78	INSTALL TEE WITH CLEANOUT

Ref. No.	Station	Offset (ft)	Side	Alignment	604/605 Item	Grate/Rim Elev.	603 Item			Upstream		Downstream	
							Size (in)	Type	Length (ft)	Ref. No.	Invert	Ref. No.	Invert
S-22	145+24.20	213.20	RT	OC	MH-3 WITH 90" I.D.	634.50	48	C	26.6	S-22	615.49	S-23	615.40
S-23*	144+91.60	230.70	RT	OC	MH-3 WITH 90" I.D.	631.25	48	C	195.0	S-23	615.40	S-24	614.75
S-24*	143+97.70	50.90	RT	OC	MH-3 WITH 72" I.D.	631.25	48	C	187.6	S-24	614.75	S-24A	614.13
S-24A*	143+65.20	136.00	LT	OC	MH-3 WITH 108" I.D.	631.25	66	B	91.3	S-24A	614.13	S-25	613.83
S-25*	143+13.00	216.40	LT	OC	MH-3 WITH 96" I.D.	631.25	66	B	285.7	S-25	613.83	S-27	612.89
S-26*	144+72.60	146.50	LT	OC	PR. CS MH	631.25	60	B	93.4	S-26	614.85	S-24A	614.13
S-26A*	144+84.40	157.18	LT	OC	EX. SAN MH - ATG	631.25	60	-	-	S-26A	613.80	S-26	613.89
S-27*	139+74.70	171.70	LT	OC	MH-3 WITH 108" I.D.	631.25	66	C	118.6	S-27	612.89	S-27A	612.50
S-27A	139+75.00	53.50	LT	OC	PR. CS MH	669.05	60	-	-	S-27A	612.50	EXIST.	612.50
S-28	11+25.48	35.12	RT	KINSMAN	EX. SAN MH - ATG	676.64	66	C	-	S-28	644.70	33-12	640.70
S-29	150+31.59	36.33	LT	OC	EX. SAN MH - ATG	676.16	63	B	-	S-29	650.40	S-28	644.80
S-30	150+72.87	52.30	RT	OC	EX. SAN MH - RTG	676.02	63	B	-	S-30	659.10	S-29	650.60
S-31	151+42.94	62.80	RT	OC	EX. SAN MH - ATG	675.64	60	B	-	S-31	662.60	S-22	615.49
S-32	154+08.49	60.49	LT	OC	EX. SAN MH - ATG	676.32	42	B	-	S-32	663.80	33-8	662.70
S-33	154+47.15	76.89	LT	OC	EX. SAN MH - RTG	678.00	60	B	-	S-33	618.00	S-31	616.20

* MANHOLE CASTING CONTAINS HINGED ACCESS ASSEMBLY

NO.	DATE	DESCRIPTION
1	2024-09-10	RECORD DRAWINGS
0	2020-01-27	RFC

ISSUE RECORD

CALCULATED JS
CHECKED SM

SEWER SCHEDULE

RECORD PLANS

CUY-IR490/SR010-2.09/19.28

RECORD PLANS

ACCESS DRIVE 1			
POINT	STA.	OFF.	LT/RT
AA	144+89.85	306.55	RT
AB	144+93.20	313.35	RT
A	144+78.16	315.78	RT
B	144+81.54	322.54	RT
C	144+60.93	311.61	RT
D	144+55.79	316.30	RT
E	144+06.32	223.39	RT
F	144+01.05	228.37	RT
G	143+80.85	175.64	RT
H	143+74.55	179.08	RT
I	143+48.29	101.52	RT
J	143+41.73	105.15	RT

ACCESS DRIVE 2			
POINT	STA.	OFF.	LT/RT
AC	144+89.08	286.07	RT
AD	144+93.09	294.10	RT
K	144+99.78	277.41	RT
L	144+93.95	273.83	RT
M	144+98.48	239.59	RT
N	144+92.80	243.78	RT
O	144+70.15	186.48	RT
P	144+64.34	190.83	RT
Q	144+51.30	146.73	RT
R	144+44.79	150.00	RT
S	144+31.03	97.57	RT
T	144+24.33	100.96	RT

ACCESS DRIVE 3			
POINT	STA.	OFF.	LT/RT
U	143+56.93	177.65	LT
V	143+63.64	167.16	LT
W	144+09.67	198.25	LT
X	144+15.34	187.24	LT
Y	144+57.67	183.76	LT
Z	144+45.12	178.25	LT
AE	144+60.54	152.41	LT
AF	144+72.86	157.77	LT

CURVE DATA
B-D RADIUS = 24′
F-H RADIUS = 234′
K-M RADIUS = 39′
O-Q RADIUS = 274′
W-Y RADIUS = 32′

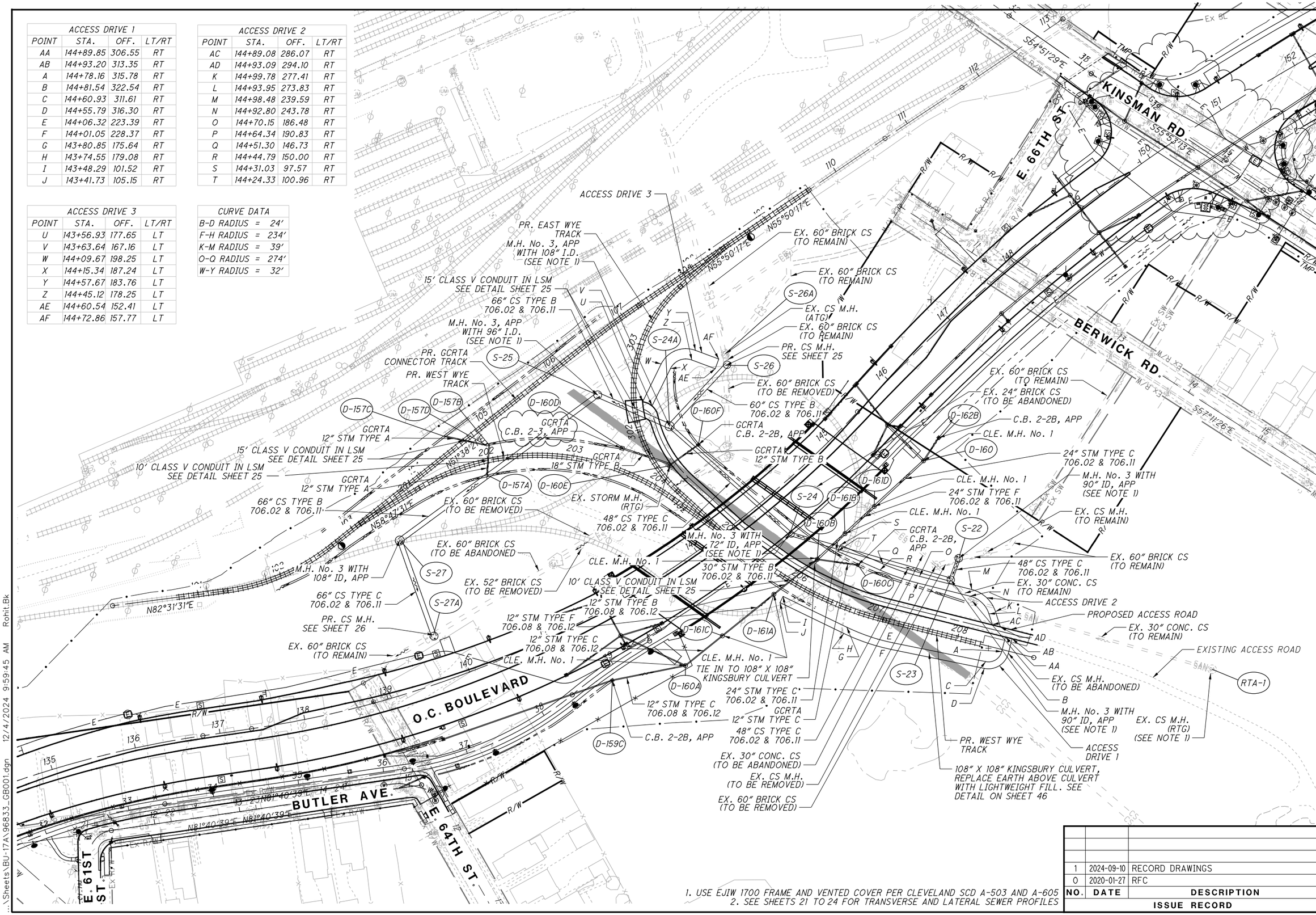

1. USE EJIW 1700 FRAME AND VENTED COVER PER CLEVELAND SCD A-503 AND A-605
2. SEE SHEETS 21 TO 24 FOR TRANSVERSE AND LATERAL SEWER PROFILES

NO.	DATE	DESCRIPTION
1	2024-09-10	RECORD DRAWINGS
0	2020-01-27	RFC

ISSUE RECORD

KINGSBURY VALLEY SEWER SCHEMATIC PLAN

RECORD PLANS

CUY-IR490/SR010-2.09/19.28

RECORD PLANS

BU-17A - GCRTA WYE TRACK
...\Sheets\BU-17A\96833_GB001.dgn 12/4/2024 9:59:45 AM Rohit.Bk

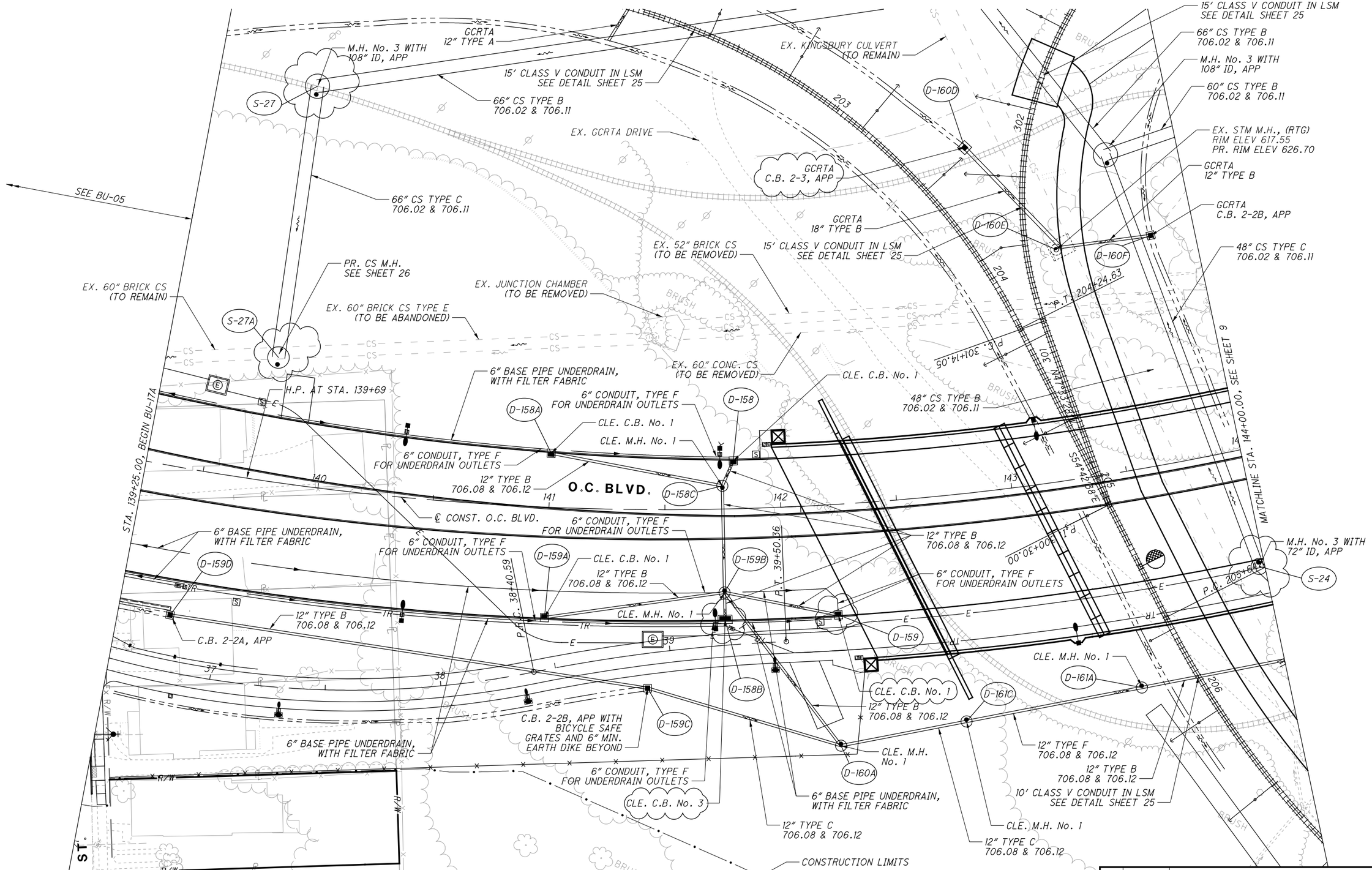

1. SEE SHEET 28 FOR TEST TEE DETAILS
2. SEE SHEETS 21 TO 24 FOR SUPPLEMENTAL SEWER PROFILES
3. SEE SHEET 6 FOR KINGSBURY VALLEY SEWER SCHEMATIC

NO.	DATE	DESCRIPTION
1	2024-09-10	RECORD DRAWINGS
0	2020-01-27	RFC

ISSUE RECORD

HORIZONTAL SCALE IN FEET 0 10 20 40

CALCULATED JTH
CHECKED SM

RECORD PLANS

DRAINAGE PLAN - O.C. BLVD.
STA. 139+25.00 TO STA. 144+00.00

RECORD PLANS

CUY-IR490/SR010-2.09/19.28

BU-17A - GCRTA WYE TRACK
...\Sheets\BU-17A\96833_GP008.dgn 12/4/2024 9:59:56 AM Rohit.Bk

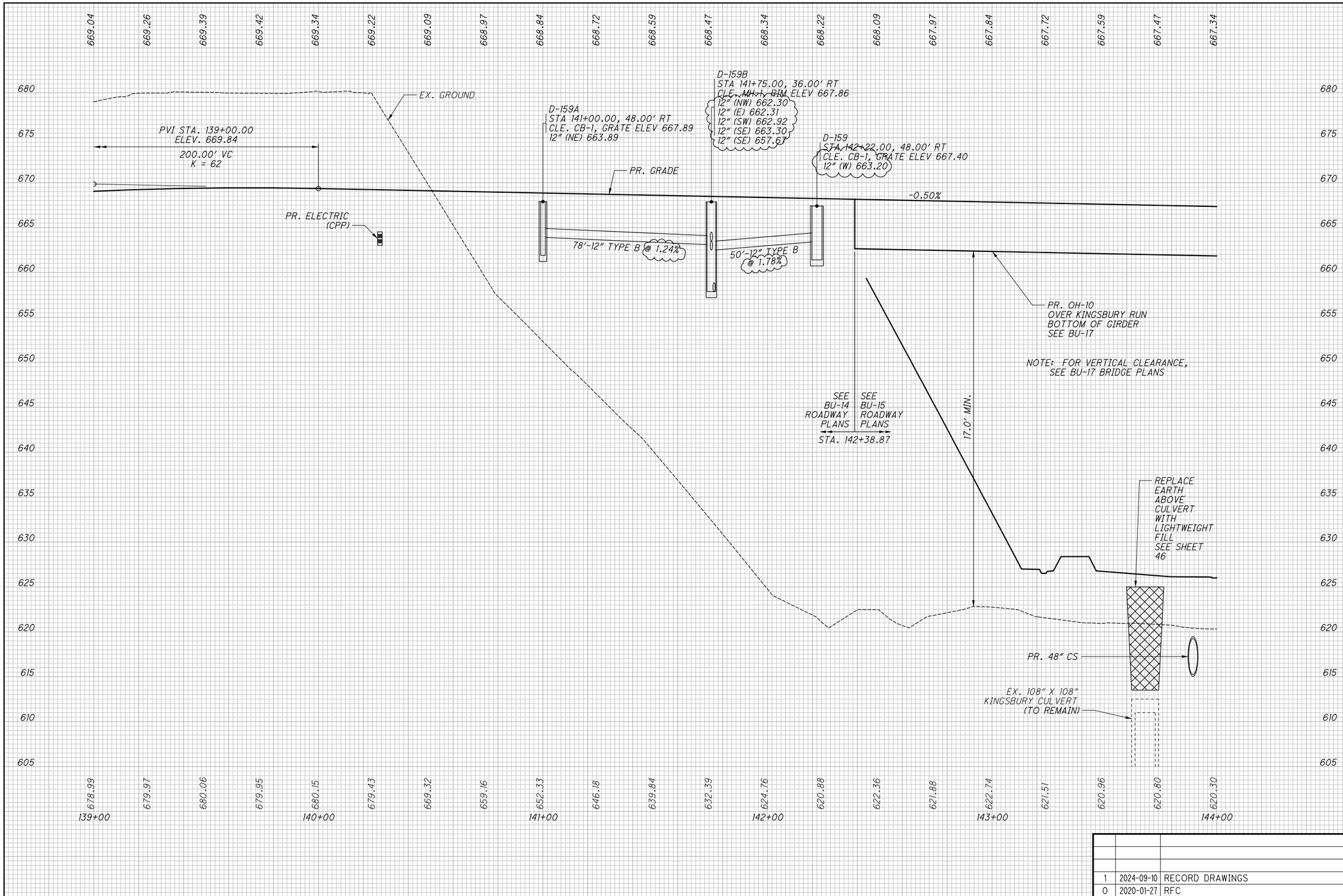

NO.	DATE	DESCRIPTION
1	2024-09-10	RECORD DRAWINGS
0	2020-01-27	RFC

ISSUE RECORD

CALCULATED JTH
CHECKED SM

DRAINAGE PROFILE - OPPORTUNITY CORRIDOR BLVD.
STA. 139+00.00 TO STA. 144+00.00

RECORD PLANS

RECORD PLANS

CUY-IR490/SR010-2.09/19.28

RECORD PLANS

BU-17A - GCRTA WYE TRACK
...\Sheets\BU-17A\96833_GF008.dgn 12/4/2024 10:00:16 AM Rohit.Bk

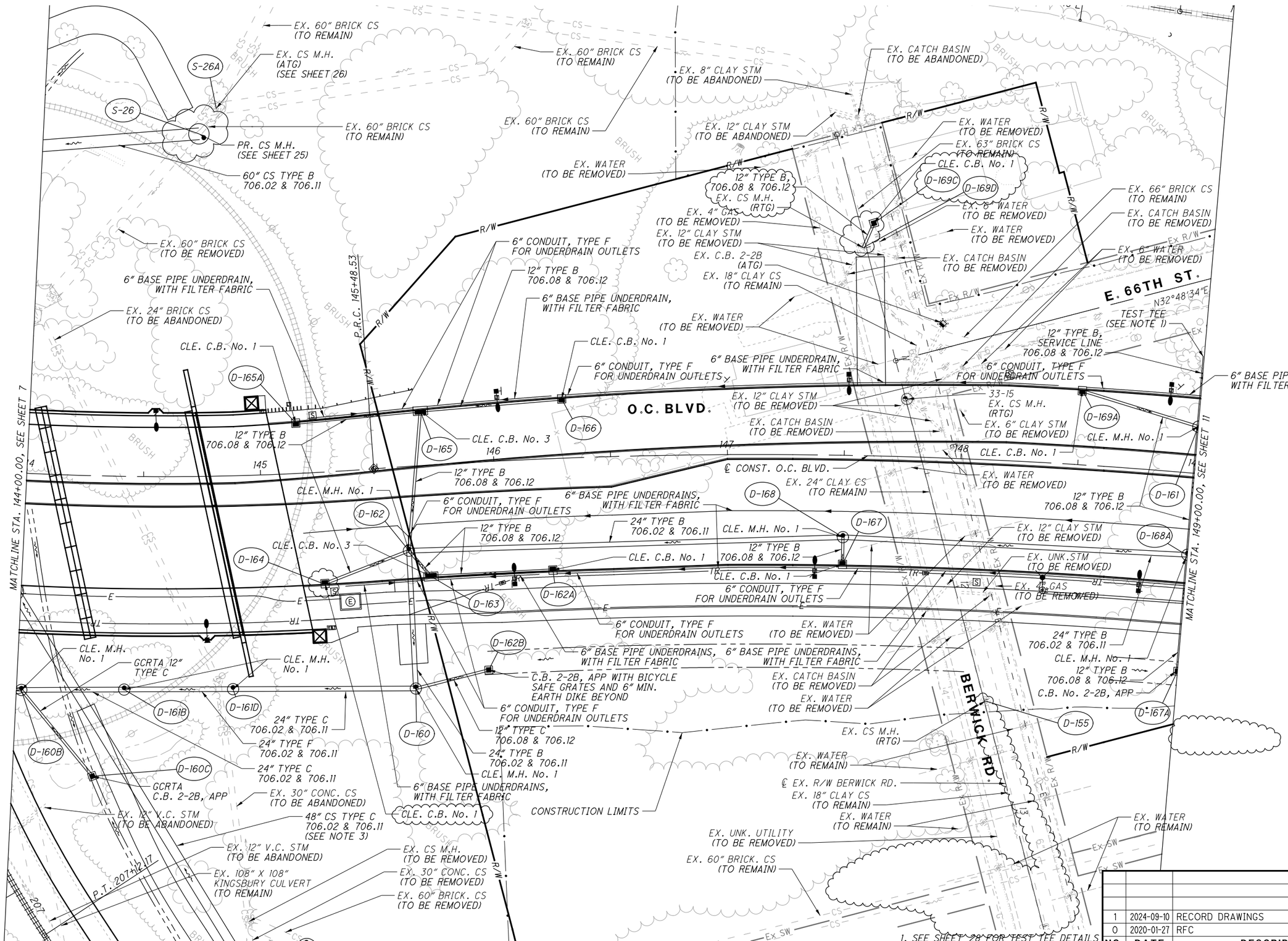

1. SEE SHEET 28 FOR TEST TEE DETAILS
2. SEE SHEETS 21 TO 24 FOR SUPPLEMENTAL SEWER PROFILES
3. SEE SHEET 6 FOR KINGSBURY VALLEY SEWER SCHEMATIC

NO.	DATE	DESCRIPTION
1	2024-09-10	RECORD DRAWINGS
0	2020-01-27	RFC

ISSUE RECORD

HORIZONTAL SCALE IN FEET 0 10 20 40

CALCULATED JTH
CHECKED SM

RECORD PLANS

DRAINAGE PLAN - O.C. BLVD.
STA. 144+00.00 TO STA. 149+00.00

RECORD PLANS

CUY-IR490/SR010-2.09/19.28

RECORD PLANS

BU-17A - GCRTA WYE TRACK
...\Sheets\BU-17A\96833_GP009.dgn 12/4/2024 10:00:30 AM Rohit.Bk

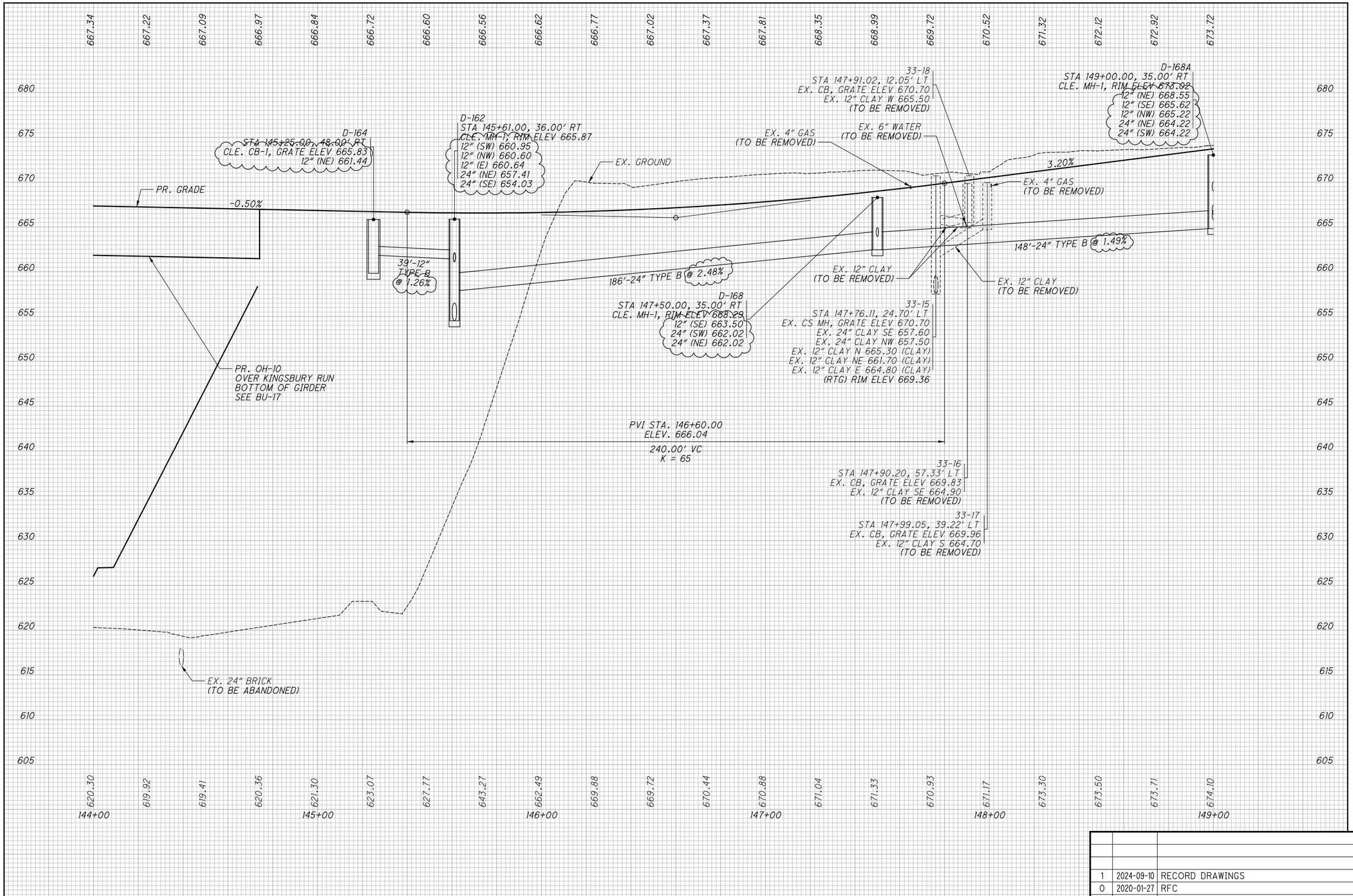

NO.	DATE	DESCRIPTION
1	2024-09-10	RECORD DRAWINGS
0	2020-01-27	RFC

ISSUE RECORD

CALCULATED JTH
CHECKED SM

DRAINAGE PROFILE - OPPORTUNITY CORRIDOR BLVD.
STA. 144+00.00 TO STA. 149+00.00

RECORD PLANS

CUY-IR490/SR010-2.09/19.28

RECORD PLANS

BU-17A - GCRTA WYE TRACK
...\Sheets\BU-17A\96833_GF009.dgn 12/4/2024 10:00:38 AM Rohit.Bk

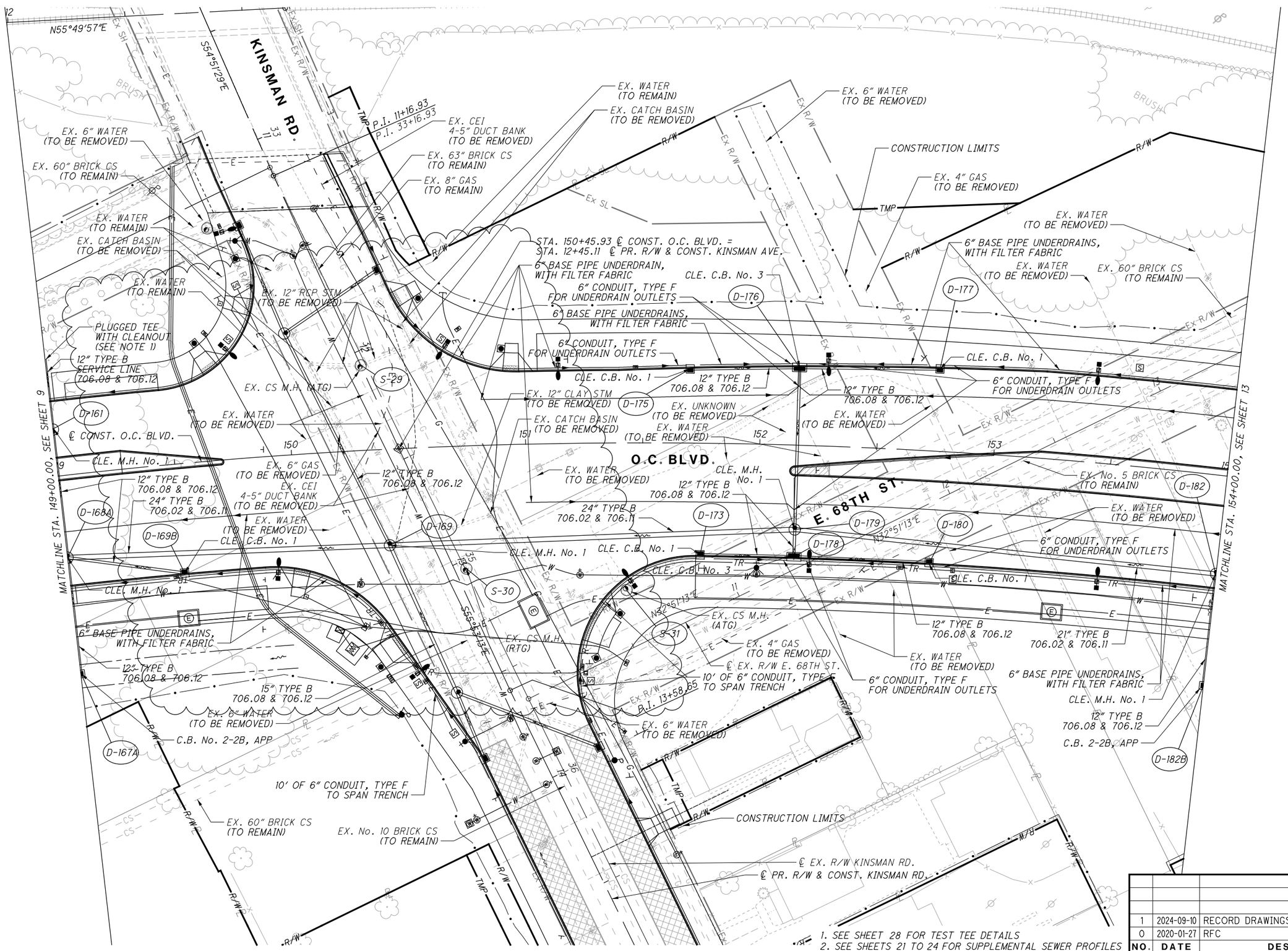

1. SEE SHEET 28 FOR TEST TEE DETAILS
2. SEE SHEETS 21 TO 24 FOR SUPPLEMENTAL SEWER PROFILES
3. SEE SHEET 6 FOR KINGSBURY VALLEY SEWER SCHEMATIC

NO.	DATE	DESCRIPTION
1	2024-09-10	RECORD DRAWINGS
0	2020-01-27	RFC

ISSUE RECORD

HORIZONTAL SCALE IN FEET 0 10 20 40

CALCULATED JTH
CHECKED SM

RECORD PLANS

DRAINAGE PLAN - O.C. BLVD.
STA. 149+00.00 TO STA. 154+00.00

RECORD PLANS

CUY-IR490/SR010-2.09/19.28

RECORD PLANS

BU-17A - GCRTA WYE TRACK
...\Sheets\BU-17A\96833_GP010.dgn 12/4/2024 10:00:50 AM Rohit.Bk

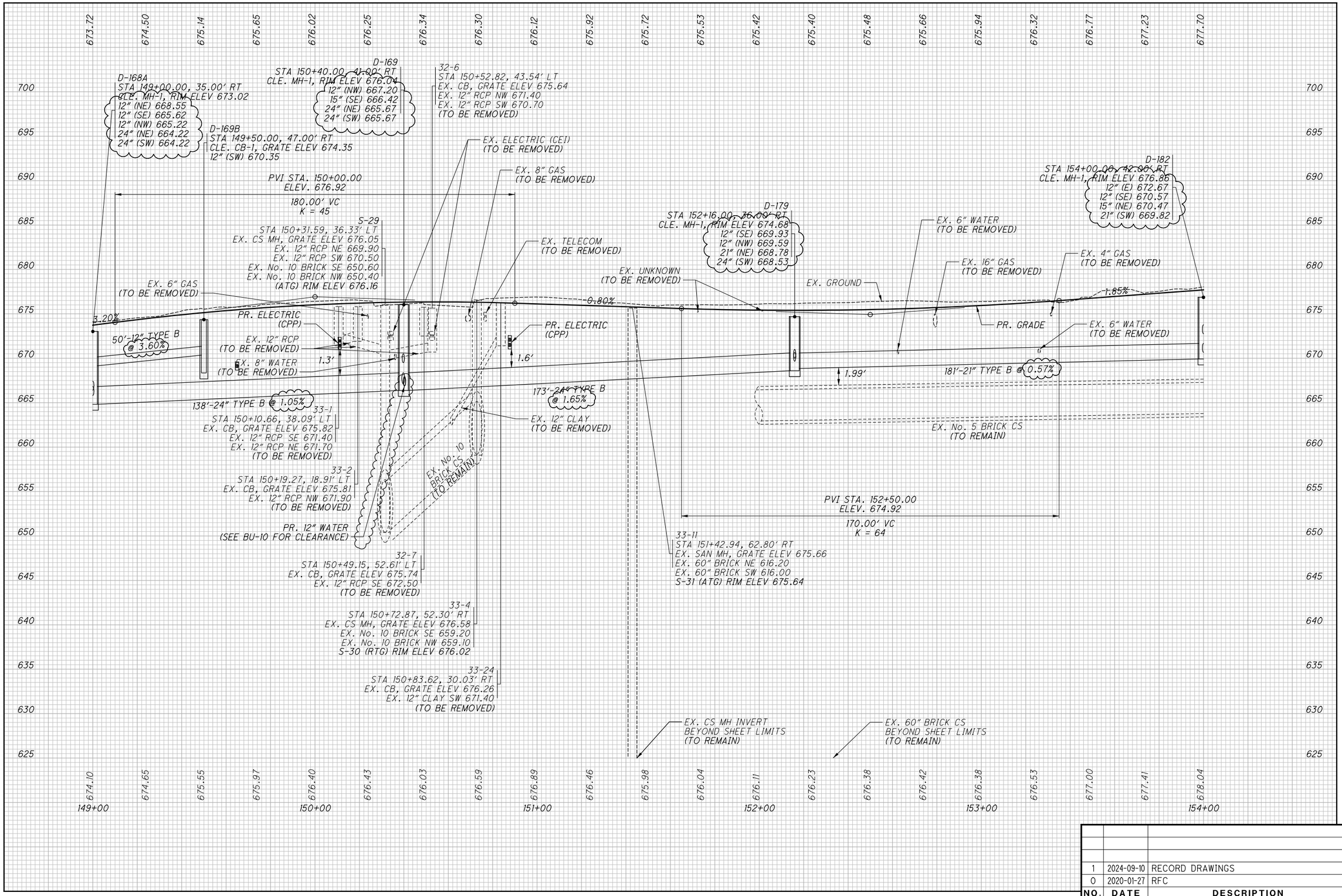

NO.	DATE	DESCRIPTION
1	2024-09-10	RECORD DRAWINGS
0	2020-01-27	RFC

ISSUE RECORD

CALCULATED JTH
CHECKED SM

DRAINAGE PROFILE - OPPORTUNITY CORRIDOR BLVD.
STA. 149+00.00 TO STA. 154+00.00

RECORD PLANS

CUY-IR490/SR010-2.09/19.28

RECORD PLANS

BU-17A - GCRTA WYE TRACK
...\Sheets\BU-17A\96833_GF010.dgn 12/4/2024 10:00:58 AM Rohit.Bk

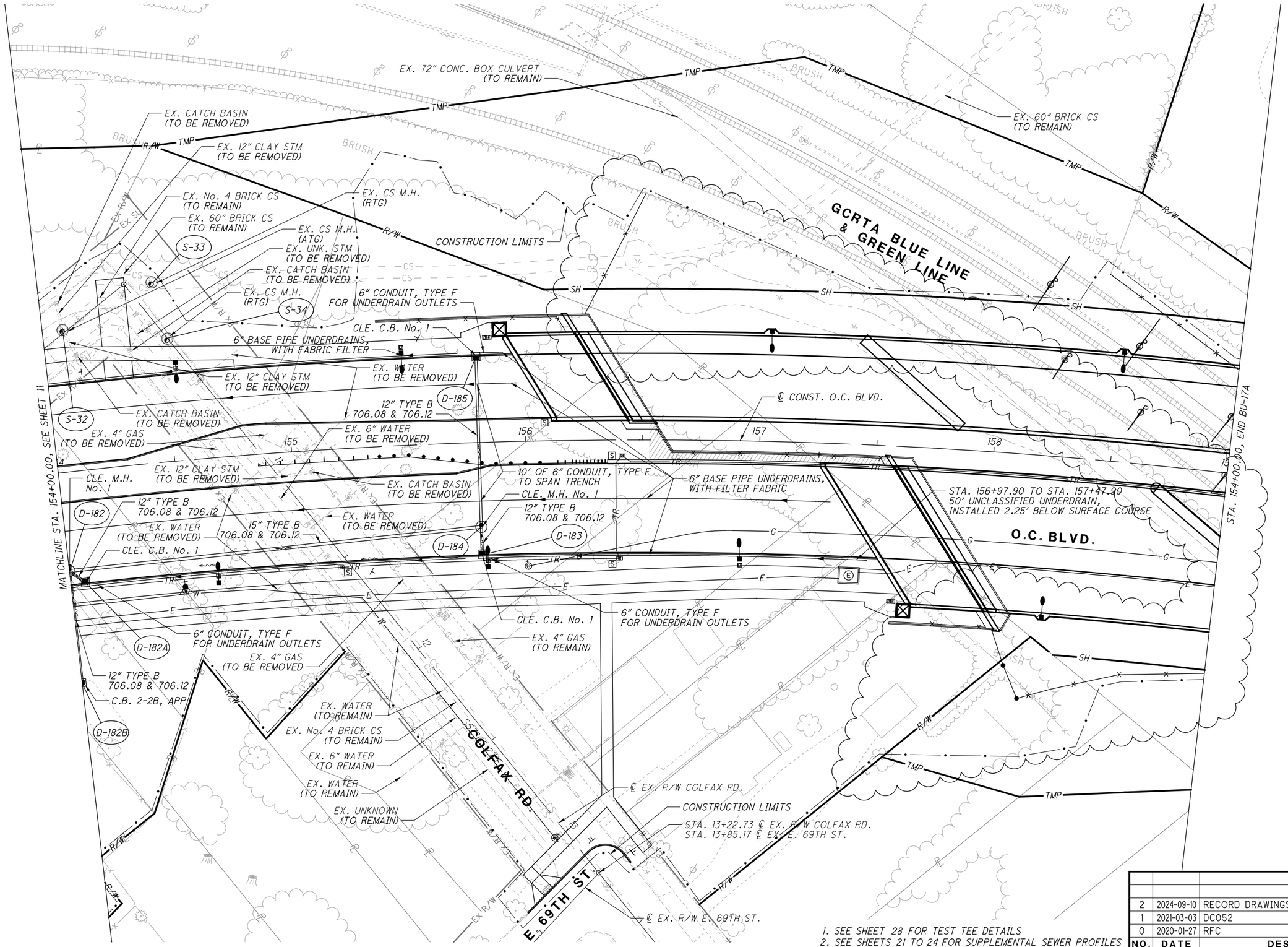

1. SEE SHEET 28 FOR TEST TEE DETAILS
2. SEE SHEETS 21 TO 24 FOR SUPPLEMENTAL SEWER PROFILES
3. SEE SHEET 6 FOR KINSBURY VALLEY SEWER SCHEMATIC

NO.	DATE	DESCRIPTION
2	2024-09-10	RECORD DRAWINGS
1	2021-03-03	DC052
0	2020-01-27	RFC

ISSUE RECORD

HORIZONTAL SCALE IN FEET 0 10 20 40

CALCULATED JTH
CHECKED SM

RECORD PLANS

DRAINAGE PLAN - O.C. BLVD.
STA. 154+00.00 TO STA. 159+00.00

RECORD PLANS

CUY-IR490/SR010-2.09/19.28

RECORD PLANS

BU-17A - GCRTA WYE TRACK
...\Sheets\BU-17A\96833_GP011.dgn 12/4/2024 10:01:12 AM Rohit.Bk

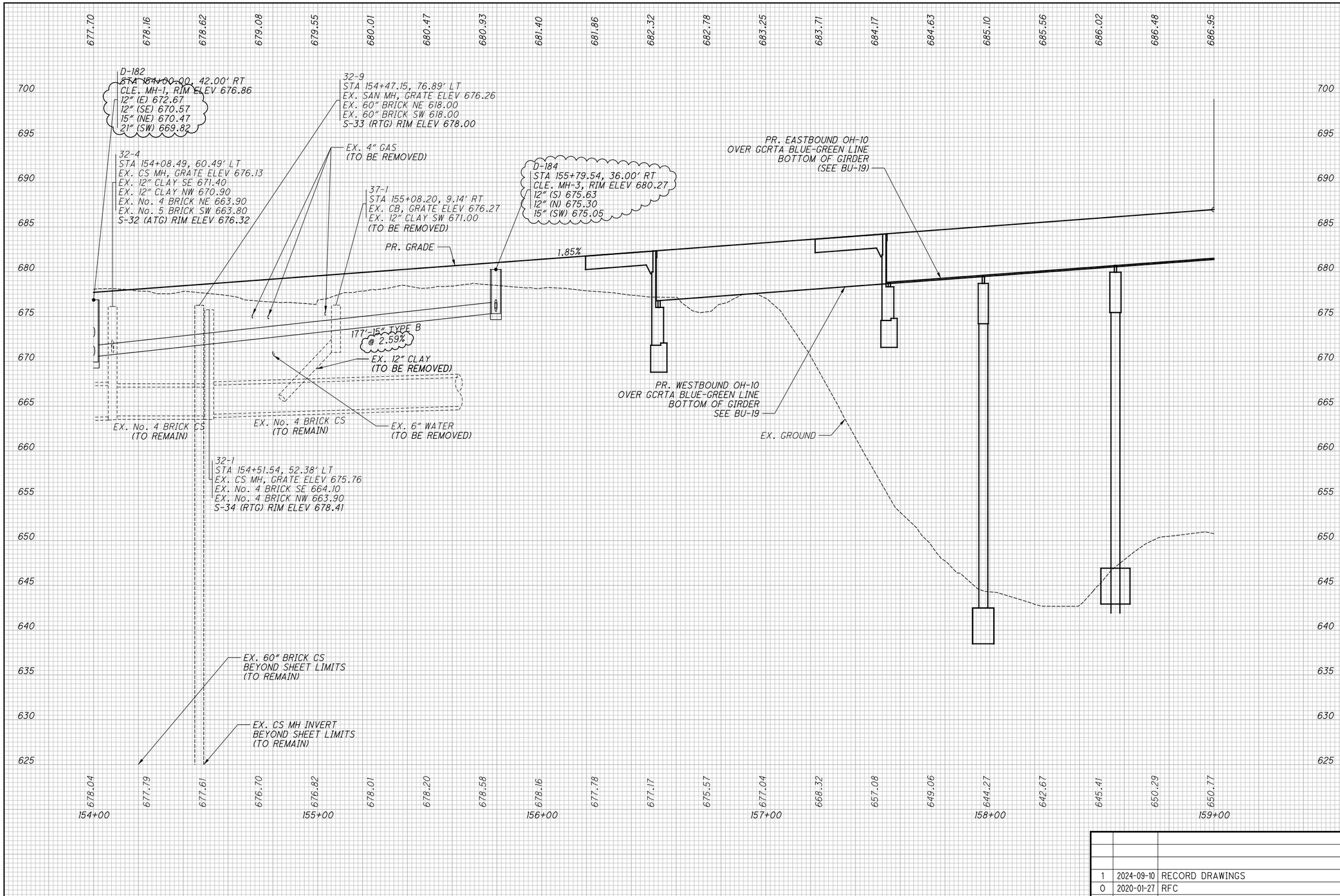

NO.	DATE	DESCRIPTION
1	2024-09-10	RECORD DRAWINGS
0	2020-01-27	RFC

ISSUE RECORD

CALCULATED JTH
CHECKED SM

DRAINAGE PROFILE - OPPORTUNITY CORRIDOR BLVD.
STA. 154+00.00 TO STA. 159+00.00

RECORD PLANS

CUY-IR490/SR010-2.09/19.28

RECORD PLANS

BU-17A - GCRTA WYE TRACK
...\Sheets\BU-17A\96833_GF01.dgn 12/4/2024 10:01:19 AM Rohit.Bk

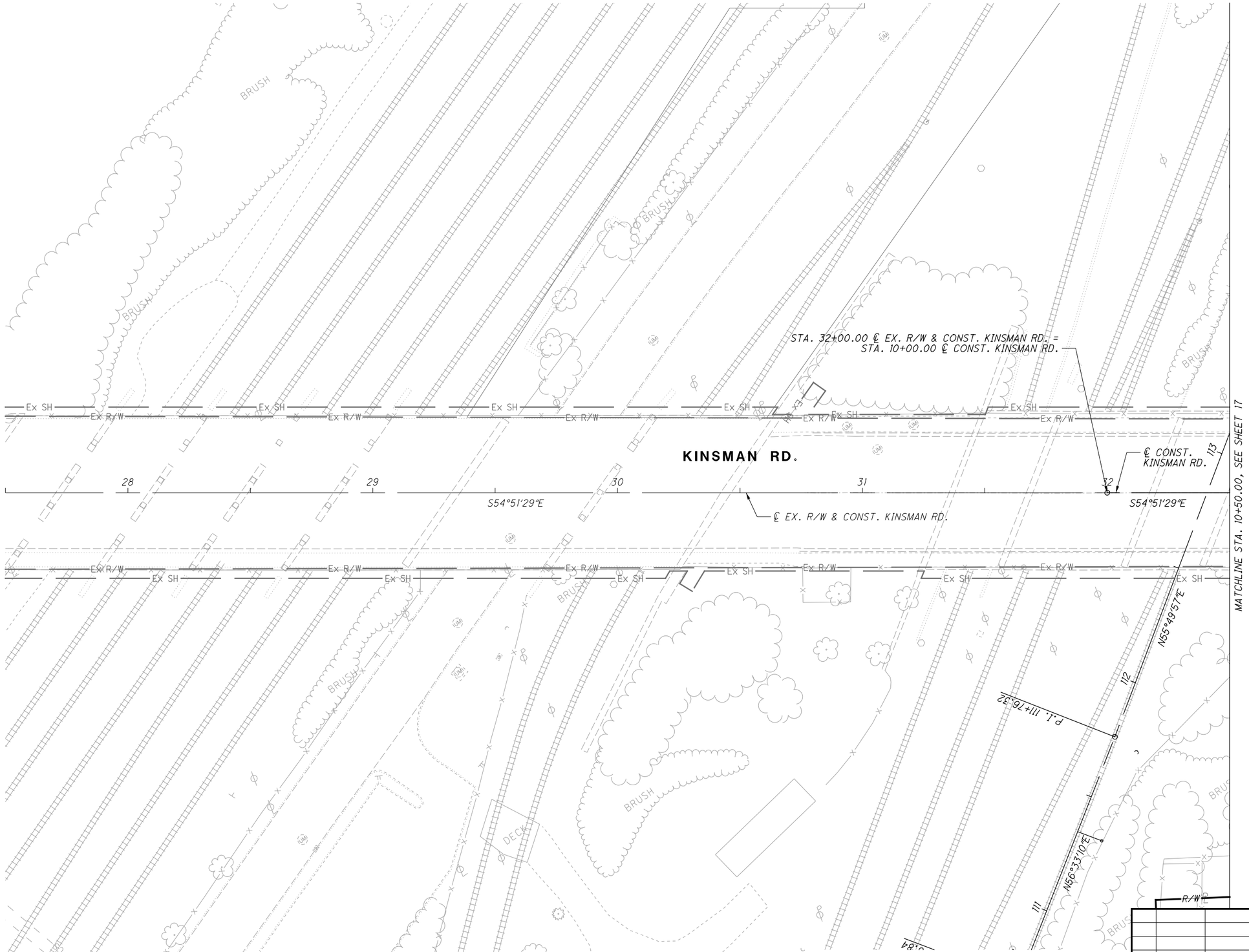

1. SEE SHEET 28 FOR TEST TEE DETAILS
2. SEE SHEETS 21 TO 24 SUPPLEMENTAL SEWER PROFILES
3. SEE SHEET 6 FOR KINGSBURY VALLEY SEWER SCHEMATIC

NO.	DATE	DESCRIPTION
0	2020-01-27	RFC

ISSUE RECORD

HORIZONTAL SCALE IN FEET
0 10 20 40

CALCULATED JTH
CHECKED SM

RECORD PLANS

DRAINAGE PLAN - KINSMAN RD.
BEGIN TO STA. 10+50.00

RECORD PLANS

CUY-IR490/SR010-2.09/19.28

RECORD PLANS

BU-17A - GCRTA WYE TRACK
...\Sheets\BU-17A\96833_GP071.dgn 3/31/2020 4:29:27 PM Jonathan.Shurilla

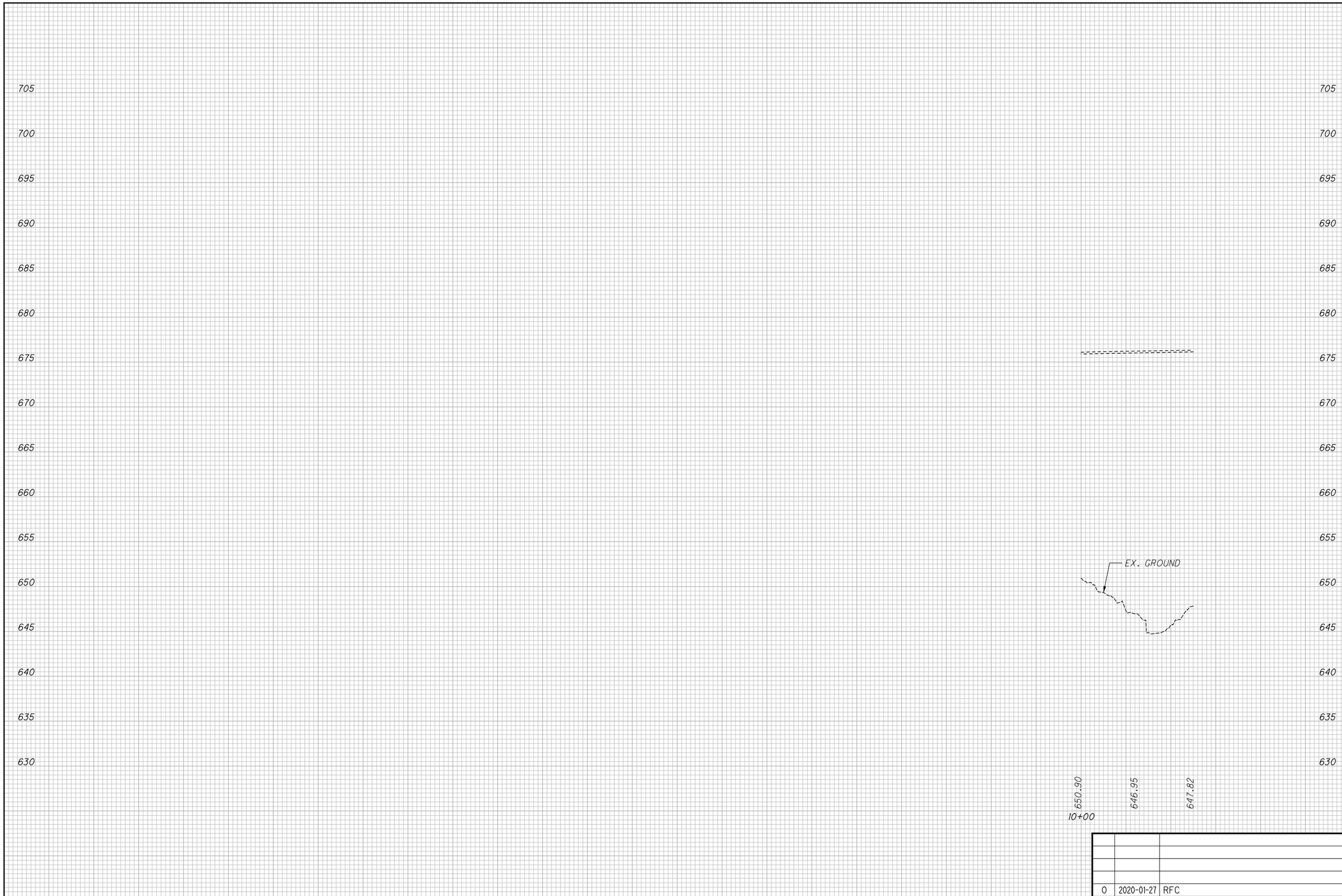

NO.	DATE	DESCRIPTION
0	2020-01-27	RFC

ISSUE RECORD

CALCULATED JTH
CHECKED SM

DRAINAGE PROFILE - KINSMAN RD.
BEGIN TO STA. 10+50.00

RECORD PLANS

CUY-IR490/SR010-2.09/19.28

RECORD PLANS

BU-17A - GCRTA WYE TRACK
...\Sheets\BU-17A\96833_GF071.dgn 3/31/2020 4:29:57 PM Jonathan.Shurilla

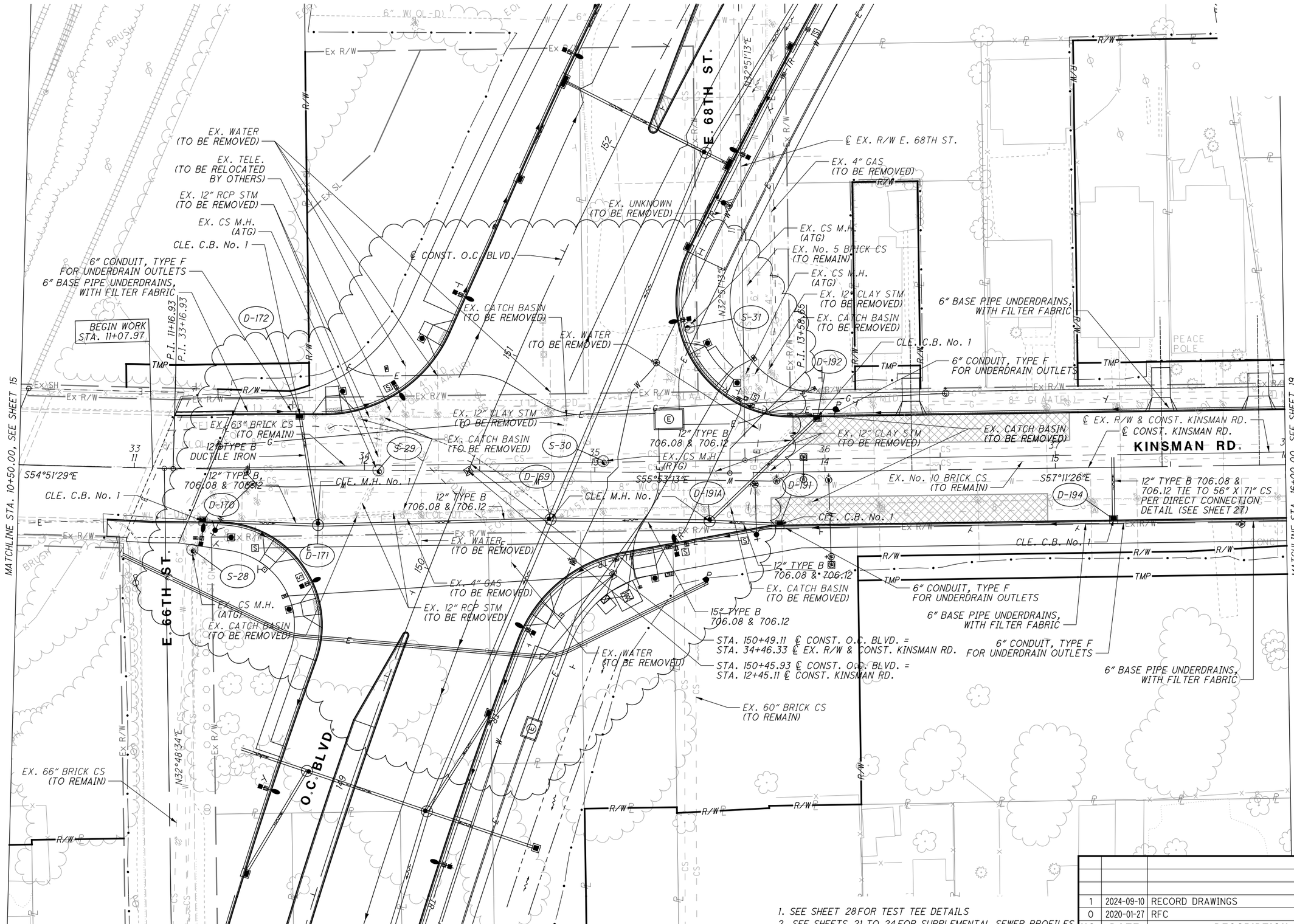

1. SEE SHEET 28 FOR TEST TEE DETAILS
2. SEE SHEETS 21 TO 24 FOR SUPPLEMENTAL SEWER PROFILES
3. SEE SHEET 6 FOR KINGSBURY VALLEY SEWER SCHEMATIC

NO.	DATE	DESCRIPTION
1	2024-09-10	RECORD DRAWINGS
0	2020-01-27	RFC

ISSUE RECORD

HORIZONTAL SCALE IN FEET 0 10 20 40

CALCULATED JTH
CHECKED SM

RECORD PLANS

DRAINAGE PLAN - KINSMAN RD.
STA. 10+50.00 TO STA. 16+00.00

RECORD PLANS

CUY-IR490/SR010-2.09/19.28

RECORD PLANS

BU-17A - GCRTA WYE TRACK
...\Sheets\BU-17A\96833_GP072.dgn 12/4/2024 10:01:47 AM Rohit.Bk

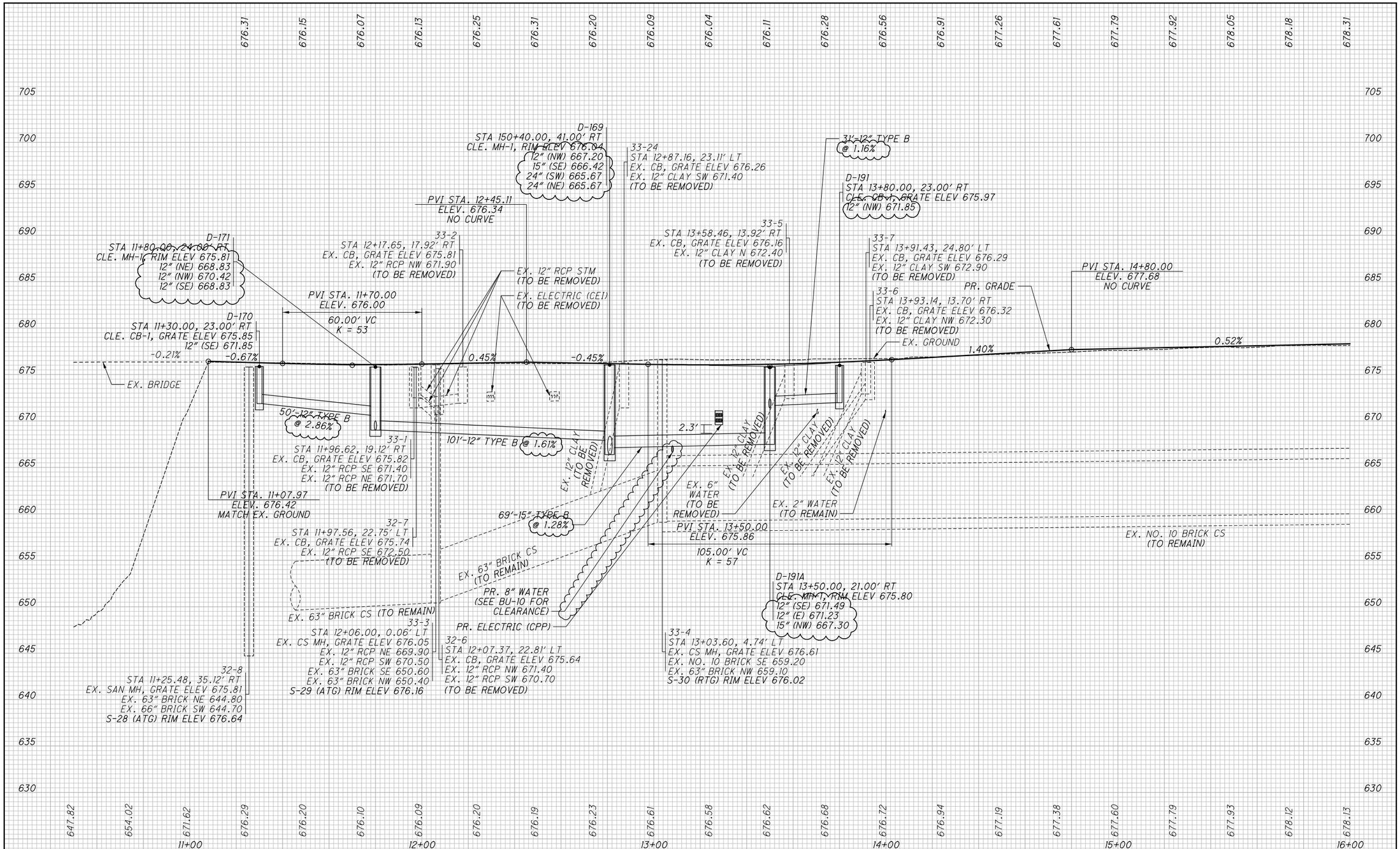

NO.	DATE	DESCRIPTION
1	2024-09-10	RECORD DRAWINGS
0	2020-01-27	RFC

ISSUE RECORD

CALCULATED JTH
CHECKED SM

DRAINAGE PROFILE - KINSMAN RD.
STA. 10+50.00 TO STA. 16+00.00

RECORD PLANS

RECORD PLANS

CUY-IR490/SR010-2.09/19.28

RECORD PLANS

BU-17A - GCRTA WYE TRACK
...\Sheets\BU-17A\96833_GF072.dgn 12/4/2024 10:01:55 AM Rohit.Bk

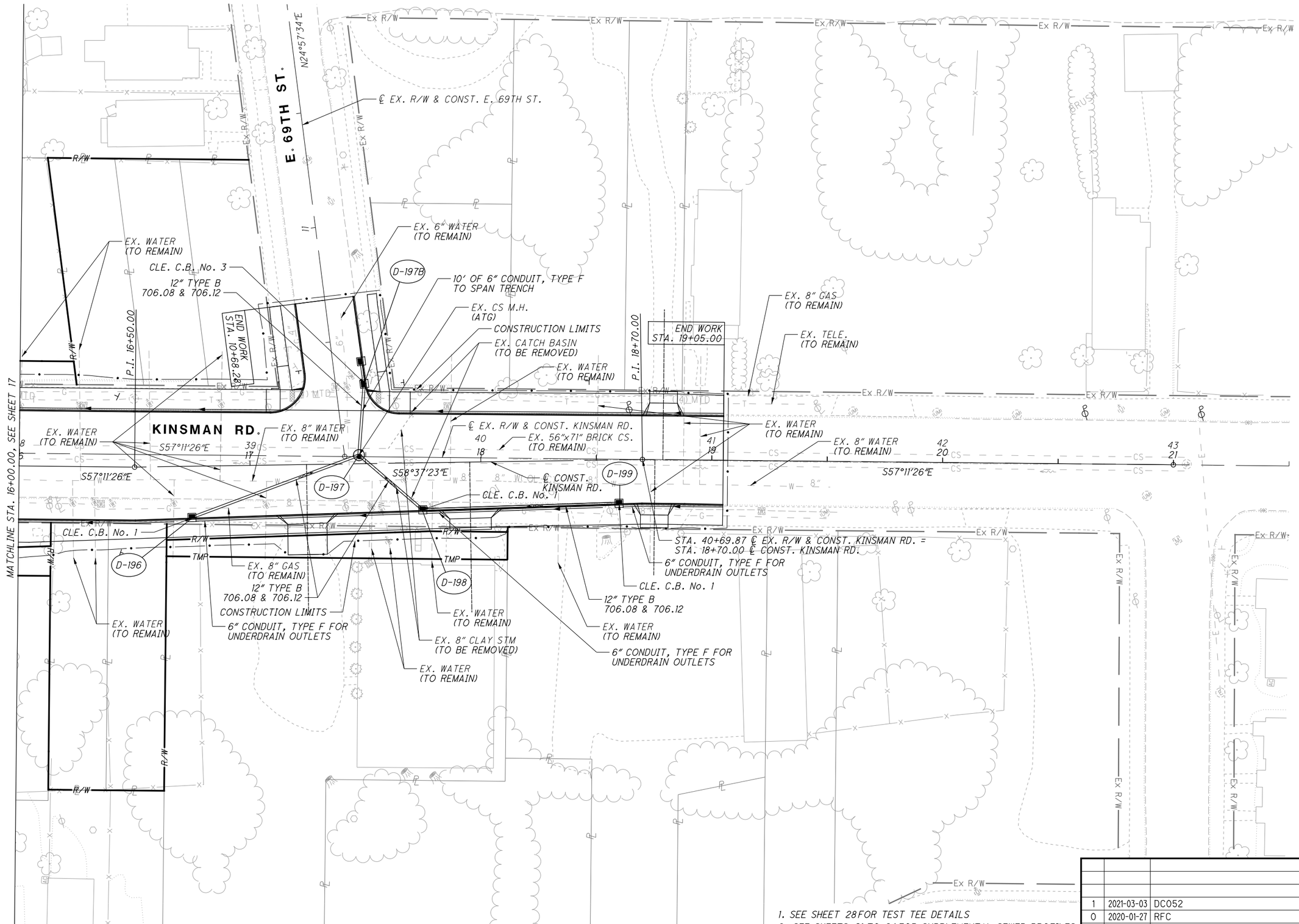

1. SEE SHEET 28 FOR TEST TEE DETAILS
2. SEE SHEETS 21 TO 24 FOR SUPPLEMENTAL SEWER PROFILES
3. SEE SHEET 6 FOR KINGSBURY VALLEY SEWER SCHEMATIC

NO.	DATE	DESCRIPTION
1	2021-03-03	DC052
0	2020-01-27	RFC

ISSUE RECORD

HORIZONTAL SCALE IN FEET 0 10 20 40

CALCULATED JTH
CHECKED SM

RECORD PLANS

DRAINAGE PLAN - KINSMAN RD.
STA. 16+00.00 TO END

RECORD PLANS

CUY-IR490/SR010-2.09/19.28

BU-17A - GCRTA WYE TRACK
...\Sheets\BU-17A\96833_GP073.dgn 5/22/2023 3:00:02 PM Gregory.Hertler

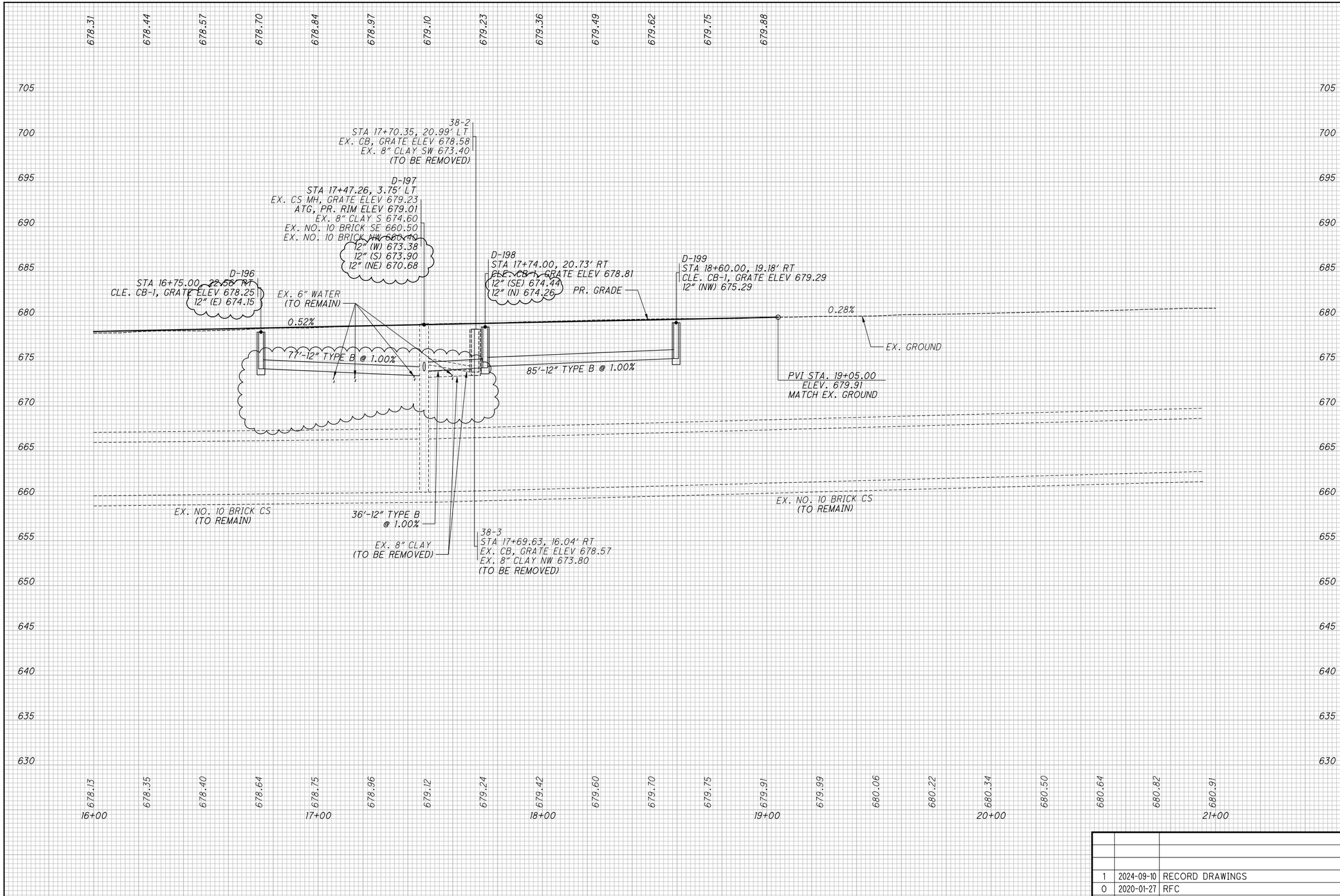

NO.	DATE	DESCRIPTION
1	2024-09-10	RECORD DRAWINGS
0	2020-01-27	RFC

ISSUE RECORD

CALCULATED JTH
CHECKED SM

DRAINAGE PROFILE - KINSMAN RD.
STA. 16+00.00 TO END

RECORD PLANS

CUY-IR490/SR010-2.09/19.28

RECORD PLANS

BU-17A - GCRTA WYE TRACK
...\Sheets\BU-17A\96833_GF073.dgn 12/4/2024 10:02:16 AM Rohit.Bk

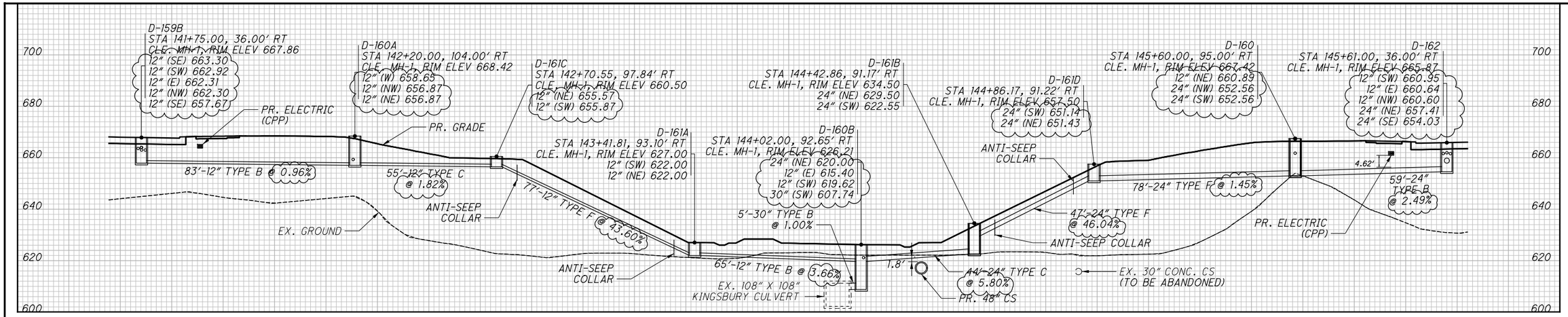

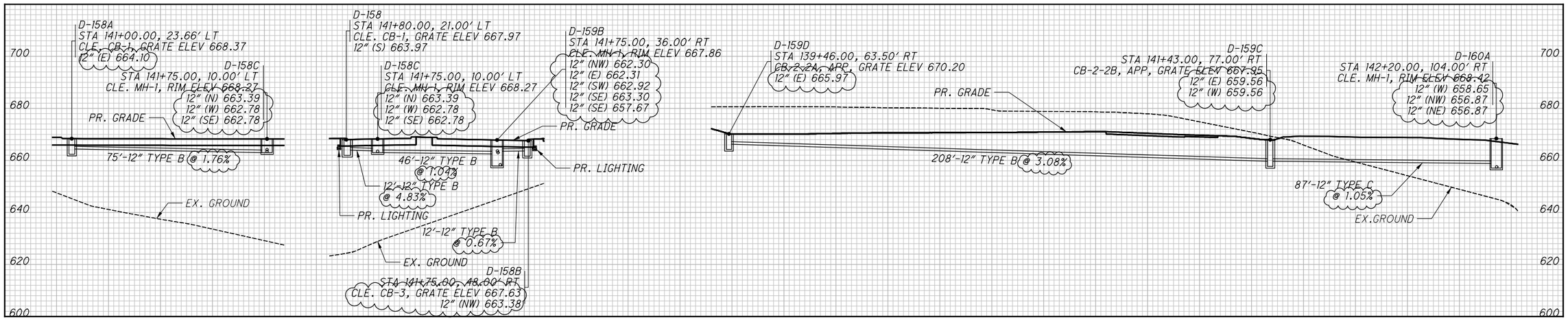

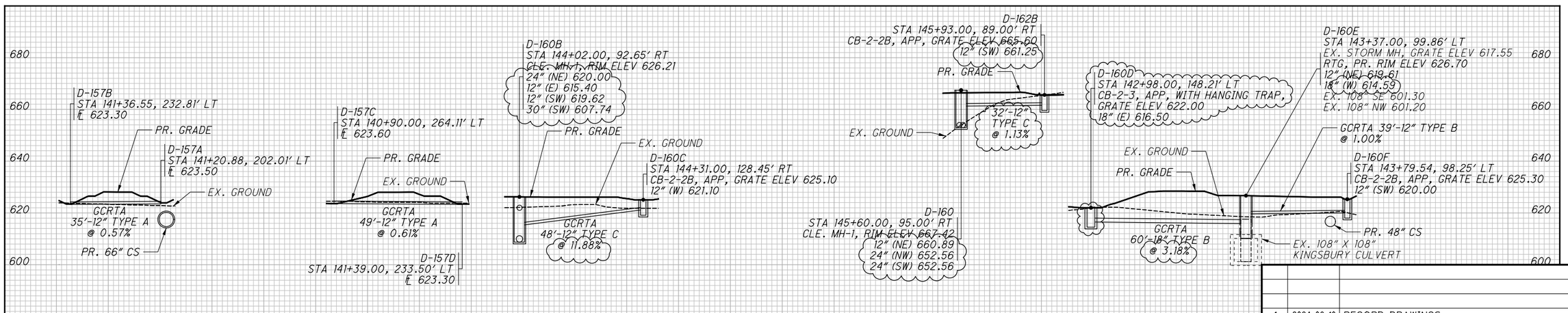

NO.	DATE	DESCRIPTION
1	2024-09-10	RECORD DRAWINGS
0	2020-01-27	RFC

ISSUE RECORD

CALCULATED KMD
CHECKED SM

DRAINAGE PROFILES
OPPORTUNITY CORRIDOR BLVD.

RECORD PLANS

RECORD PLANS

CUY-IR490/ SR010-2.09/19.28

RECORD PLANS

BU-17A - GCRTA WYE TRACK
...\Sheets\BU-17A\96833_DD001.dgn 12/4/2024 4:41:01 PM Gregory.Hertler

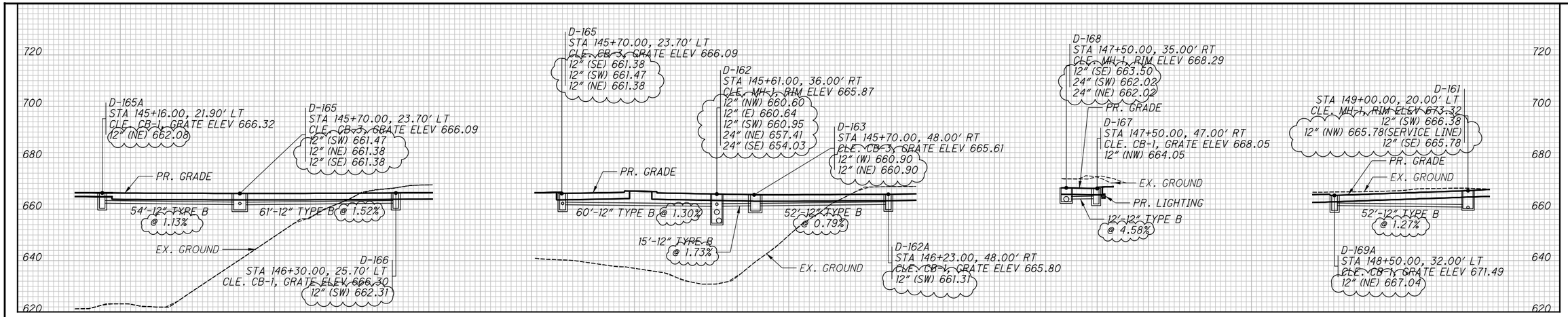

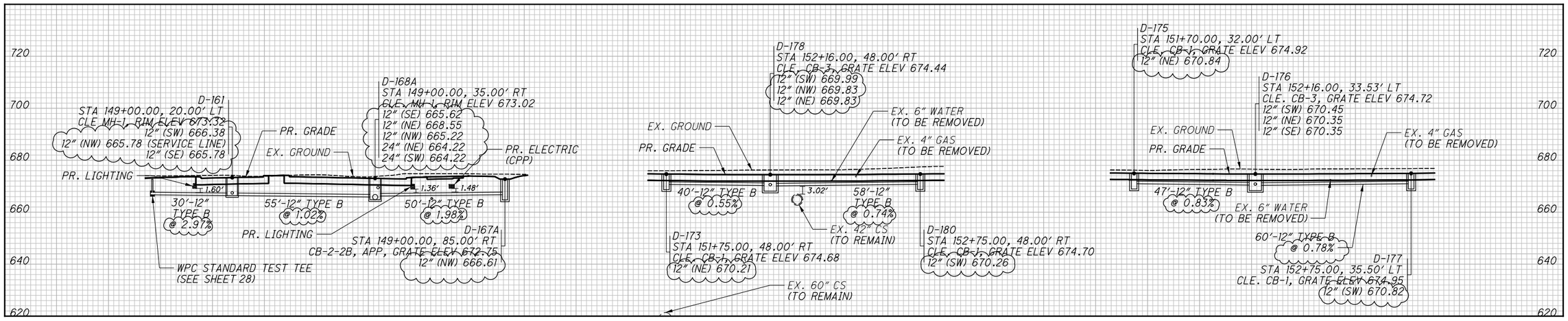

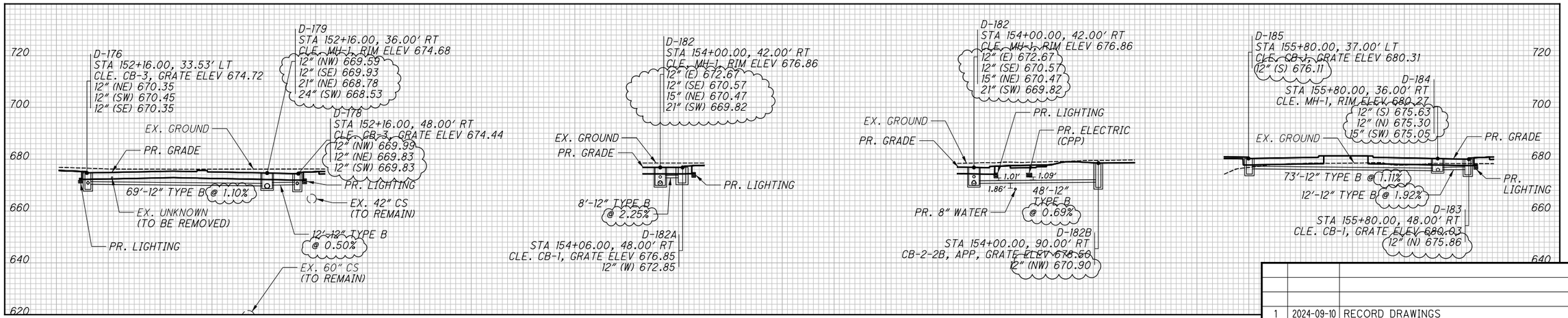

NO.	DATE	DESCRIPTION
1	2024-09-10	RECORD DRAWINGS
0	2020-01-27	RFC

ISSUE RECORD

CALCULATED KMD
CHECKED SM

DRAINAGE PROFILES
OPPORTUNITY CORRIDOR BLVD.
RECORD PLANS

RECORD PLANS

CUY-IR490/ SR010-
2.09 / 19.28
RECORD PLANS

BU-17A - GCRTA WYE TRACK
...\Sheets\BU-17A\96833_DD002.dgn 12/4/2024 10:02:37 AM Rohit.Bk

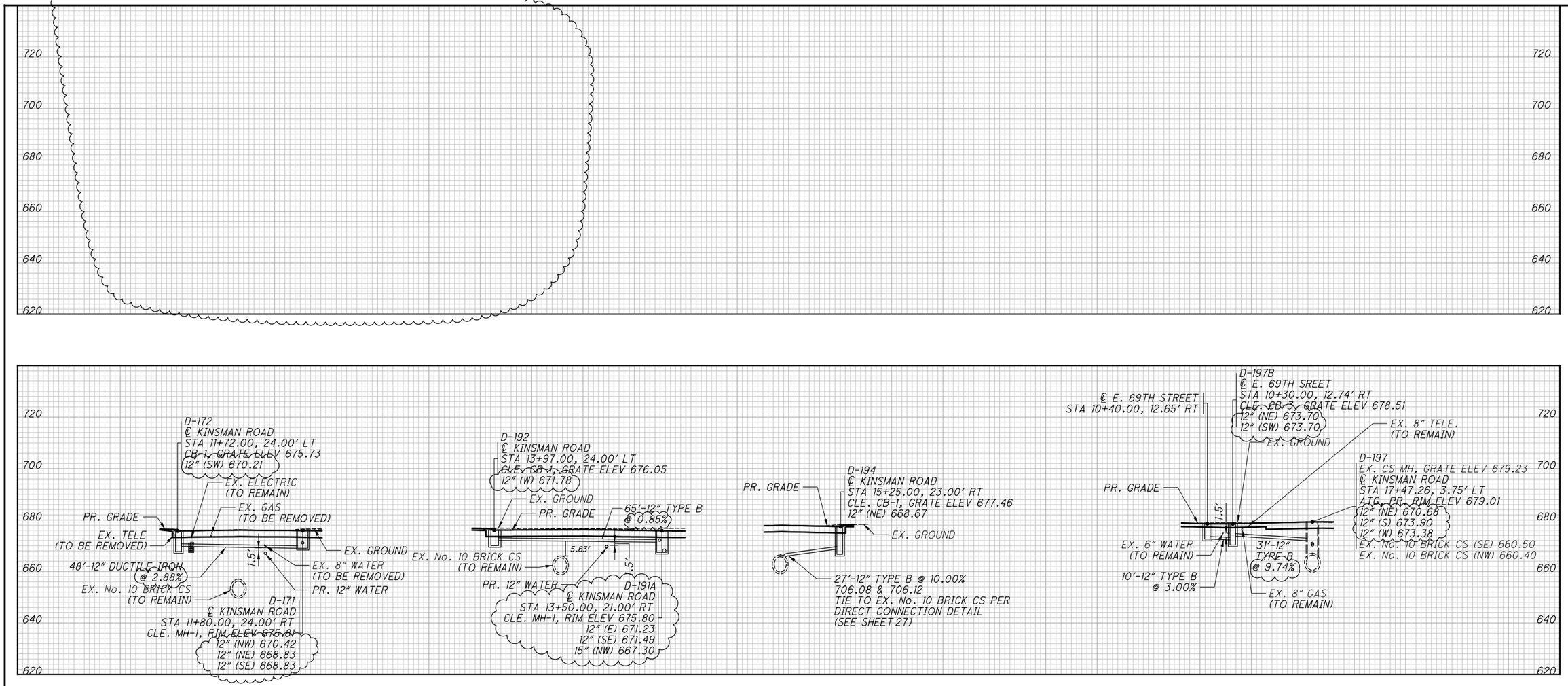

NO.	DATE	DESCRIPTION
2	2024-09-10	RECORD DRAWINGS
1	2021-03-03	DC052
0	2020-01-27	RFC

ISSUE RECORD

CALCULATED KMD
CHECKED SM

DRAINAGE PROFILES
BERWICK ROAD & KINSMAN ROAD

RECORD PLANS

RECORD PLANS

CUY-IR490/SR010-2.09/19.28

RECORD PLANS

BU-17A - GCRTA WYE TRACK
...\Sheets\BU-17A\96833_DD003.dgn 12/4/2024 10:02:47 AM Rohit.Bk

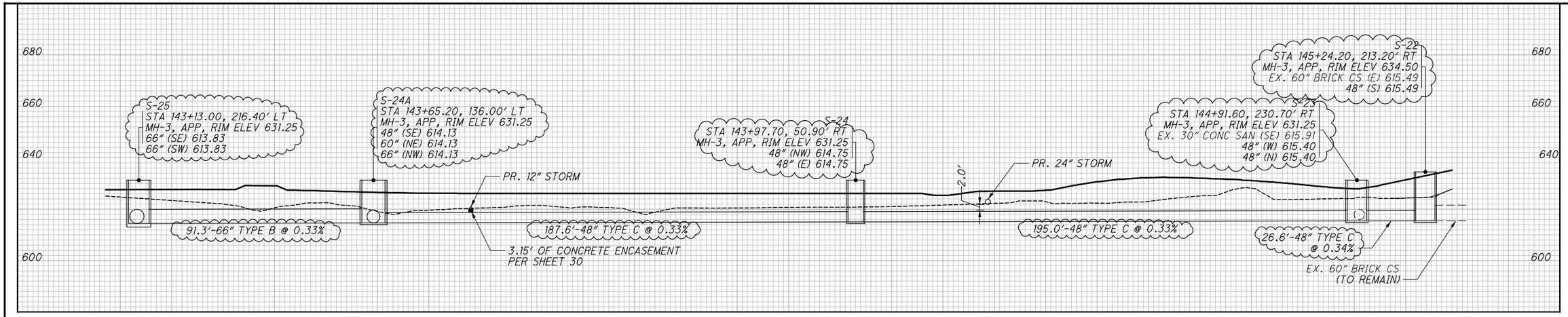

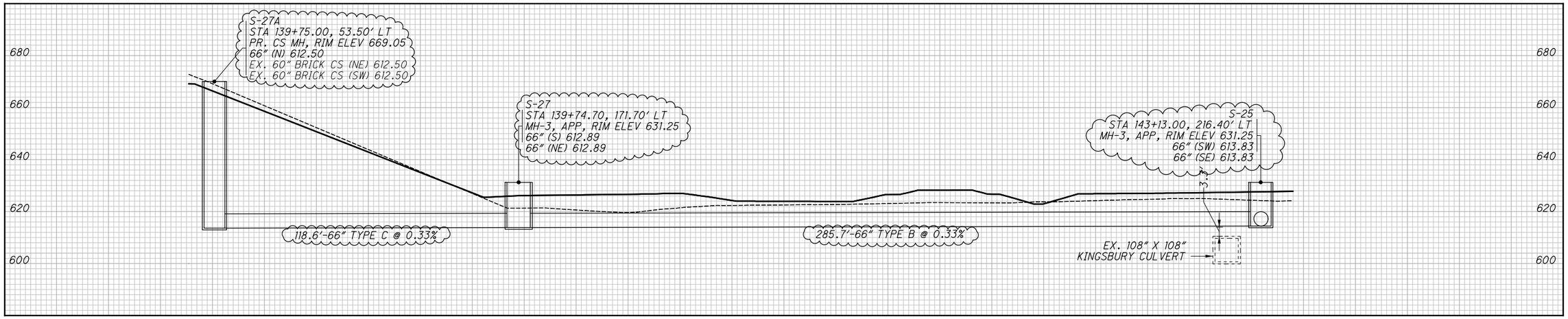

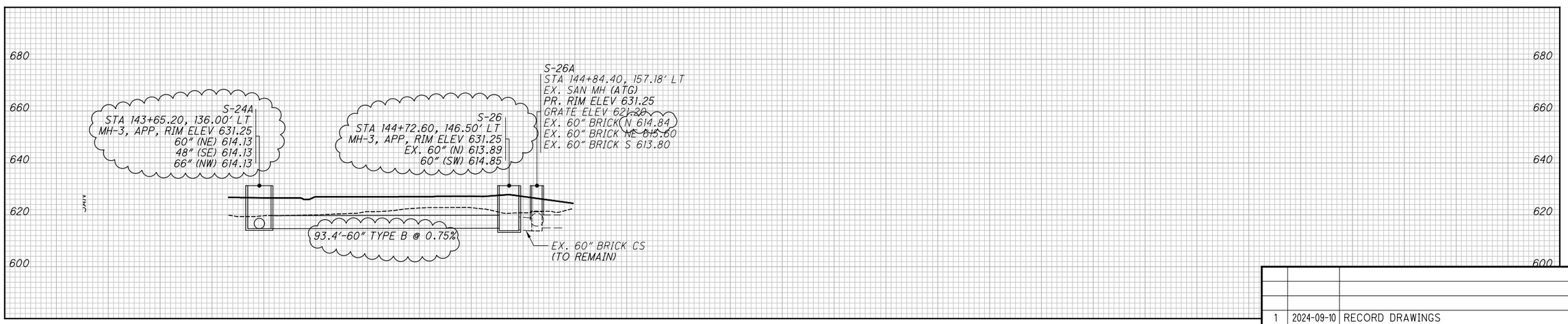

NO.	DATE	DESCRIPTION
1	2024-09-10	RECORD DRAWINGS
0	2020-01-27	RFC

ISSUE RECORD

CALCULATED JTS
CHECKED SM

GRAVITY SANITARY SEWER PROFILES

RECORD PLANS

CUY-IR490/SR010-2.09/19.28

RECORD PLANS

BU-17A - GCRTA WYE TRACK
...\Sheets\BU-17A\96833_DD004.dgn 12/11/2024 8:06:19 AM Rohit.Bk

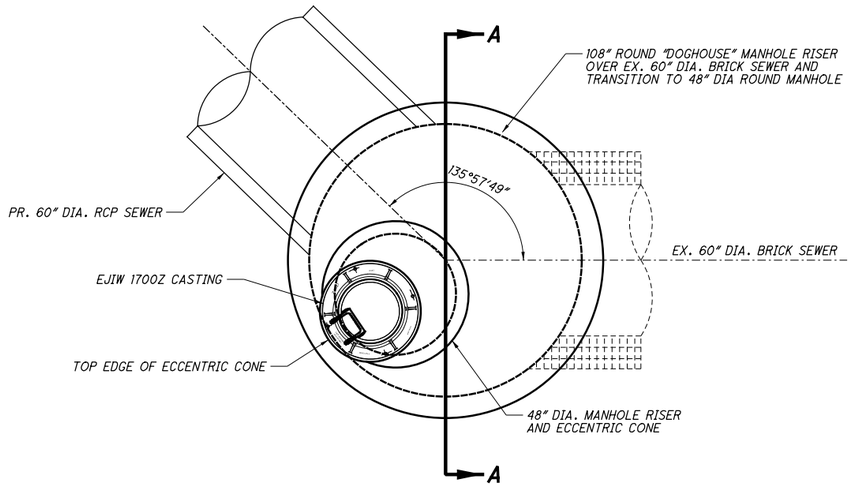

S-26 CS "DOGHOUSE" M.H.

FOR S-26, SEE ATTACHED SHOP DRAWINGS FOR AS-BUILT INFORMATION

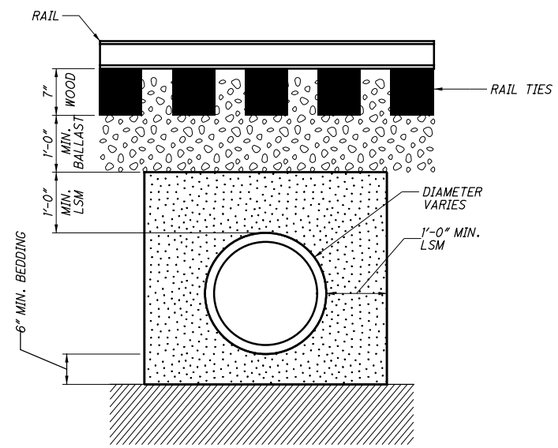

CLASS V AND LSM DETAIL
N.T.S.

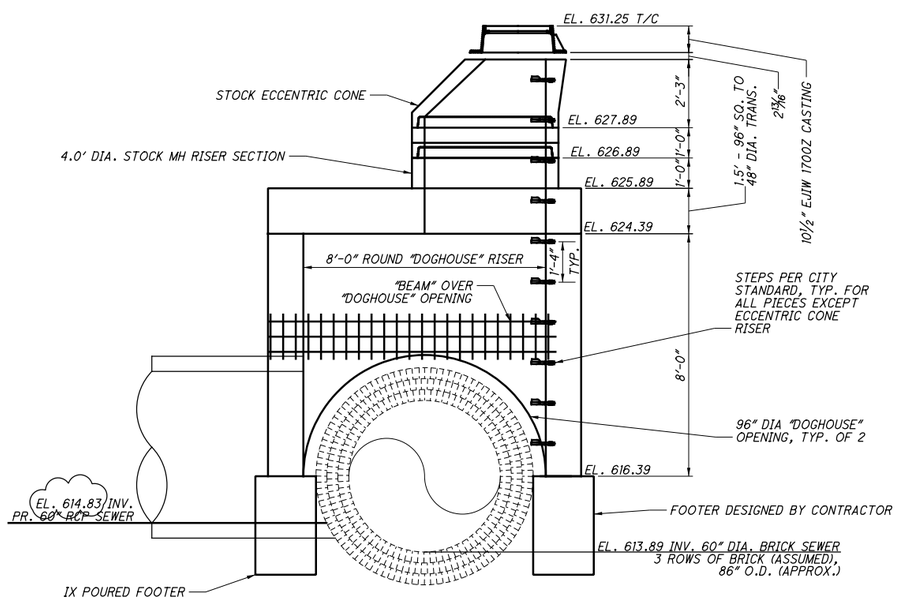

SECTION A-A

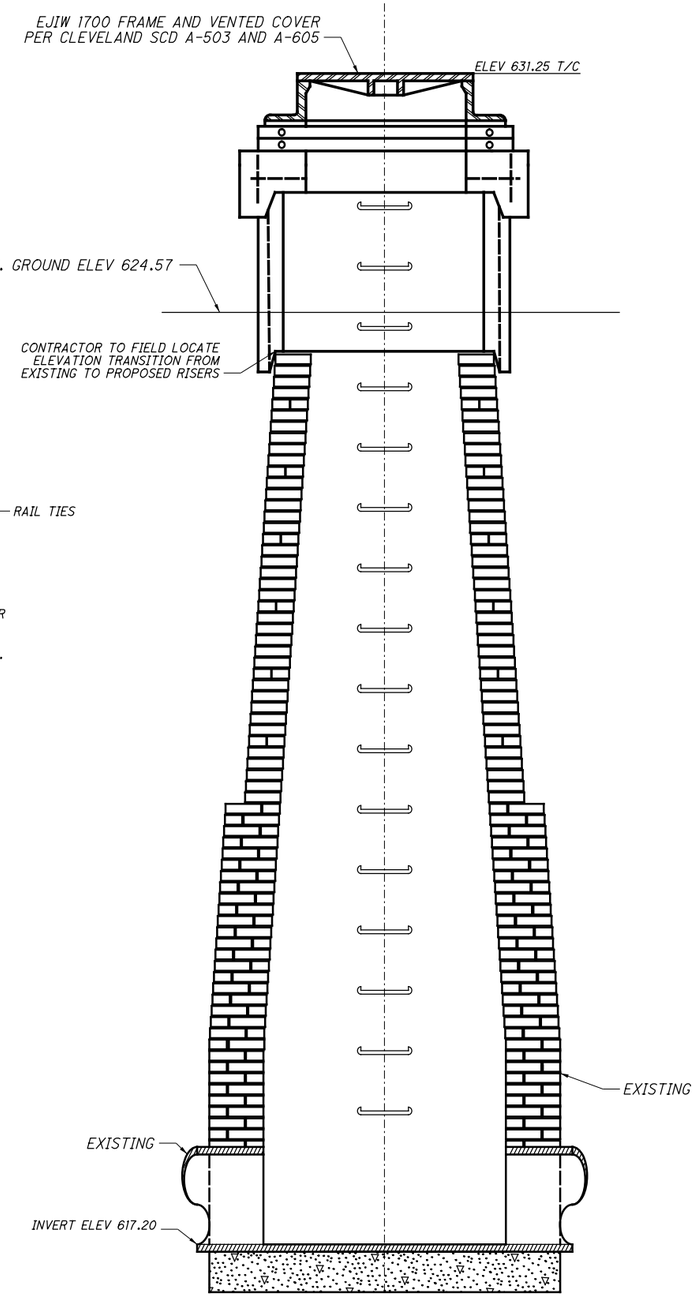

RTA-1 M.H. (N.T.S.)

NOTES:
1.) CONCRETE MIN. 5,000 PSI @ 28 DAYS
2.) REINFORCING GRADE 60 ASTM A615-A617 60,000 PSI YIELD STRENGTH
3.) HS-20 LOADING
4.) ALL MANHOLE SECTIONS SHALL CONFORM TO THE PROVISIONS OF ASTM C-478
5.) RUBBER GASKETED JOINTS SHALL CONFORM TO THE PROVISIONS OF ASTM C-443.
6.) CONTRACTOR TO FILL VOID WITH CONCRETE, CLASS QC1 OR NON-SHRINK GROUT

NO.	DATE	DESCRIPTION
1	2024-09-10	RECORD DRAWINGS
0	2020-01-27	RFC

ISSUE RECORD

SANITARY STRUCTURE DETAILS - S-26 AND RTA-1

RECORD PLANS

CUY-IR490/SR010-2.09/19.28

RECORD PLANS

BU-17A - GCRTA WYE TRACK
...\Sheets\BU-17A\96833_DD901.dgn 12/11/2024 8:38:10 AM Rohit.Bk

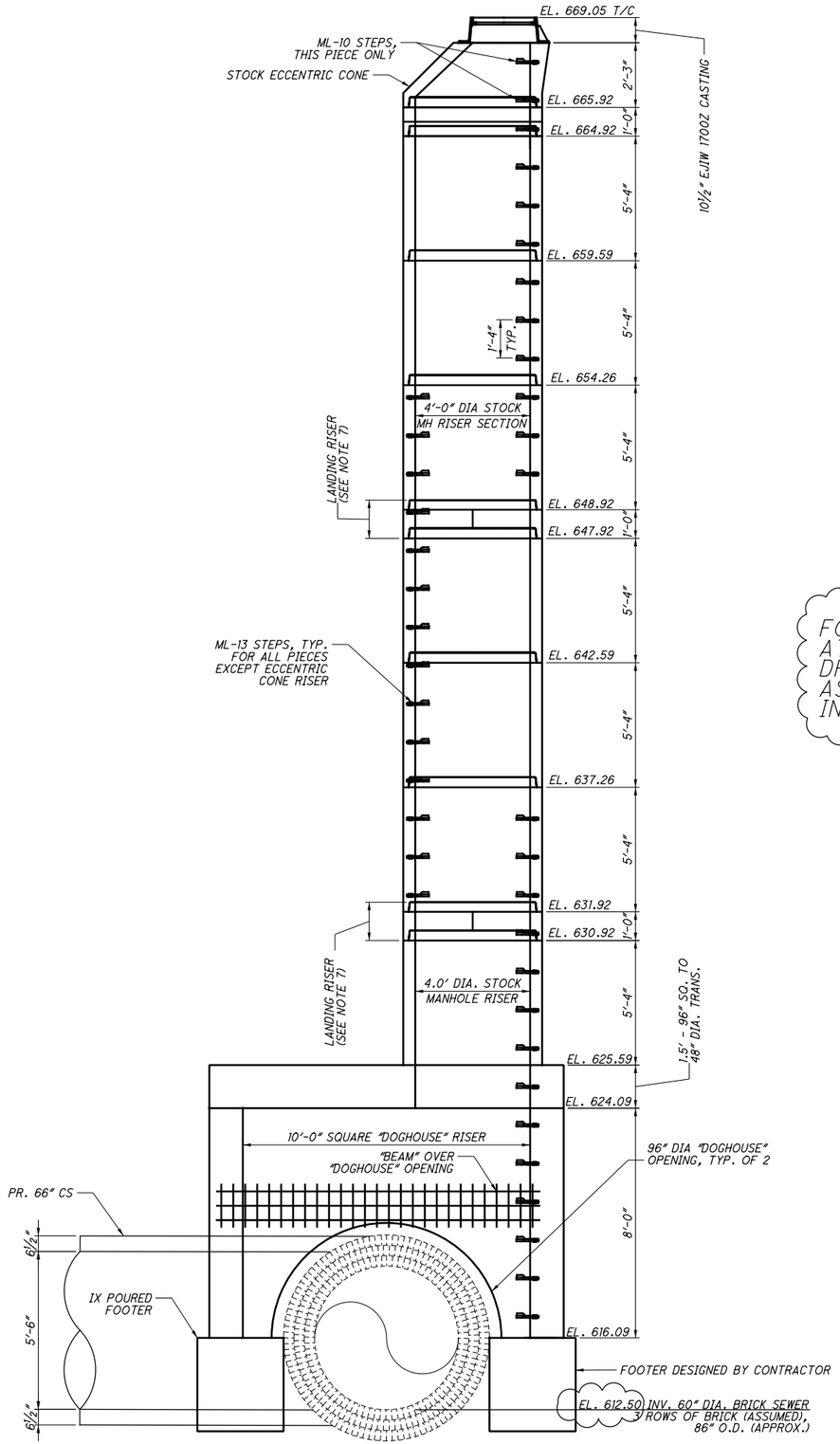

S-27A SECTION A-A

FOR S-27A, SEE ATTACHED SHOP DRAWINGS FOR AS-BUILT INFORMATION.

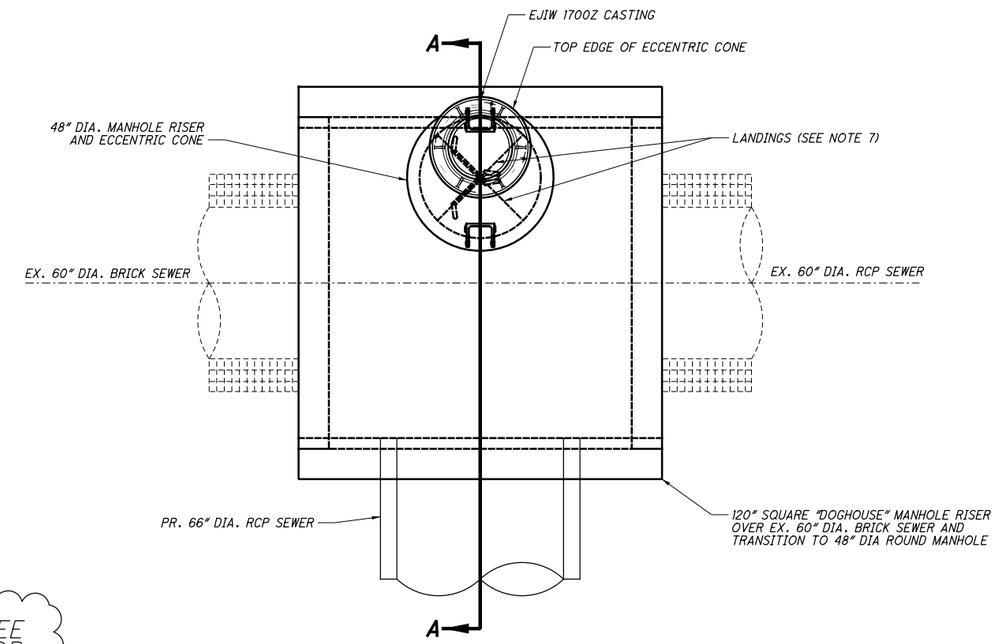

S-27A DROP STRUCTURE

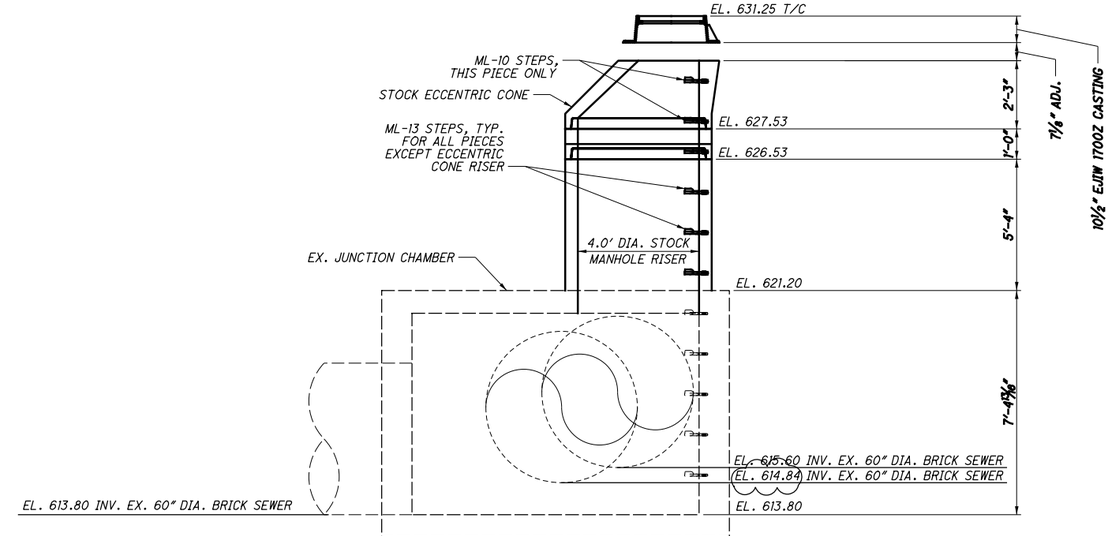

S-26A JUNCTION CHAMBER (ATG)

NOTES:
1.) CONCRETE MIN. 5,000 PSI @ 28 DAYS
2.) REINFORCING GRADE 60 ASTM A615-A617 60,000 PSI YIELD STRENGTH
3.) HS-20 LOADING
4.) ALL MANHOLE SECTIONS SHALL CONFORM TO THE PROVISIONS OF ASTM C-478
5.) RUBBER GASKETED JOINTS SHALL CONFORM TO THE PROVISIONS OF ASTM C-443.
6.) EX. 60" DIA. SEWER SIZE, COMPOSITION AND WALL THICKNESS TO BE CONFIRMED BY OTHERS.
7.) LANDING RISERS SHALL BE INSTALLED PER THE DETAILS SHOWN ON SHEET 36
8.) CONTRACTOR TO MATCH INVERTS - CAST-IN-PLACE
9.) CONTRACTOR TO FILL VOID WITH CONCRETE, CLASS QC1 OR NON-SHRINK GROUT

NO.	DATE	DESCRIPTION
1	2024-09-10	RECORD DRAWINGS
0	2020-01-27	RFC

ISSUE RECORD

SANITARY STRUCTURE DETAILS - S-26A AND S-27A

RECORD PLANS

CUY-IR490/SR010-2.09/19.28

RECORD PLANS

BU-17A - GCRTA WYE TRACK
...\Sheets\BU-17A\96833_DD902.dgn 12/11/2024 8:38:15 AM Rohit.Bk

NOTE:

1. CORE DRILL HOLE WITH SUFFICIENT CLEARANCE FOR LATERAL PIPE. POSITION LATERAL CONNECTION IN WALL OF THE INTERCEPTOR SUCH THAT ALL RINGS OF BRICK REMAIN SUPPORTED. THE LATERAL SHALL NOT PROTRUDE INTO THE INTERCEPTOR MORE THEN ONE (1) INCH AT ANY POINT. THE CONTRACTOR SHALL TRIM THE CONNECTION END AS NEEDED, TO MEET BOTH OF THESE REQUIREMENTS. THE ANNULAR SPACE BETWEEN THE CORED HOLE AND THE LATERAL SHALL BE COMPLETELY FILLED TO THE INSIDE FACE OF THE INTERCEPTOR, WITH NON-SHRINK HYDRAULIC CEMENT.

2. IF THE CONNECTION IS TO A REINFORCED CONCRETE OR VITRIFIED CLAY PIPE THEN THE LATERAL SHALL BE CONNECTED TO THE SEWER USING A MANUFACTURED BOOT THAT MAKE A WATERTIGHT CONNECTION. IF THE CONNECTION IS TO A BRICK SEWER THEN THE LATERAL SHALL BE CONNECTED BY WRAPPING A WATERSTOP MATERIAL SUCH AS A VOLCLAY RX101 OR EQUAL AROUND THE LATERAL, 2 WRAPS MINIMUM IN ACCORDANCE WITH THE DETAIL. IF WATERSTOP MATERIAL IS USED, THE ANNULAR SPACE BETWEEN THE SEWER WALL AND THE LATERAL SHALL BE FILLED WITH HYDRAULIC CEMENT. EITHER TYPE OF CONNECTION SHALL THEN BE ENCASED IN CONCRETE CLASS QC1.

3. CONNECTIONS SHALL BE ABOVE PIPE SPRING LINE. CONNECTIONS SHALL BE ACCOMPLISHED BY MEANS OF DEFLECTION AT THE PIPE JOINT. THIS DEFLECTION SHALL NOT EXCEED 1/2" FOR 12" CONDUIT OR 3/8" FOR 15" CONDUIT OR THE MAXIMUM ALLOWABLE DEFLECTION AS RECOMMENDED BY THE MANUFACTURER. FOR CONNECTIONS NOT ABLE TO BE MADE BY DEFLECTIONS, CONNECTIONS SHALL BE ACHIEVED BY USING RADIUS CURVE FITTINGS OF 22.5, 30, 45, OR OTHER SUITABLE FITTINGS APPROVED BY THE ENGINEER. THE FITTINGS TO BE USED SHALL BE THAT WHICH MINIMIZES THE LENGTH OF CONNECTION REPLACMENT.

4. ALL NECESSARY BENDS, BRANCHES, COLLARS, CONCRETE ENCASEMENT SHALL BE INCLUDED IN PAYMENT FOR THE APPROPRIATE ITEM 611 - CONDUIT PAY ITEM.

5. SEE GENERAL NOTES FOR ADDITIONAL CONSTRUCTION AND COORDINATION REQUIREMENTS.

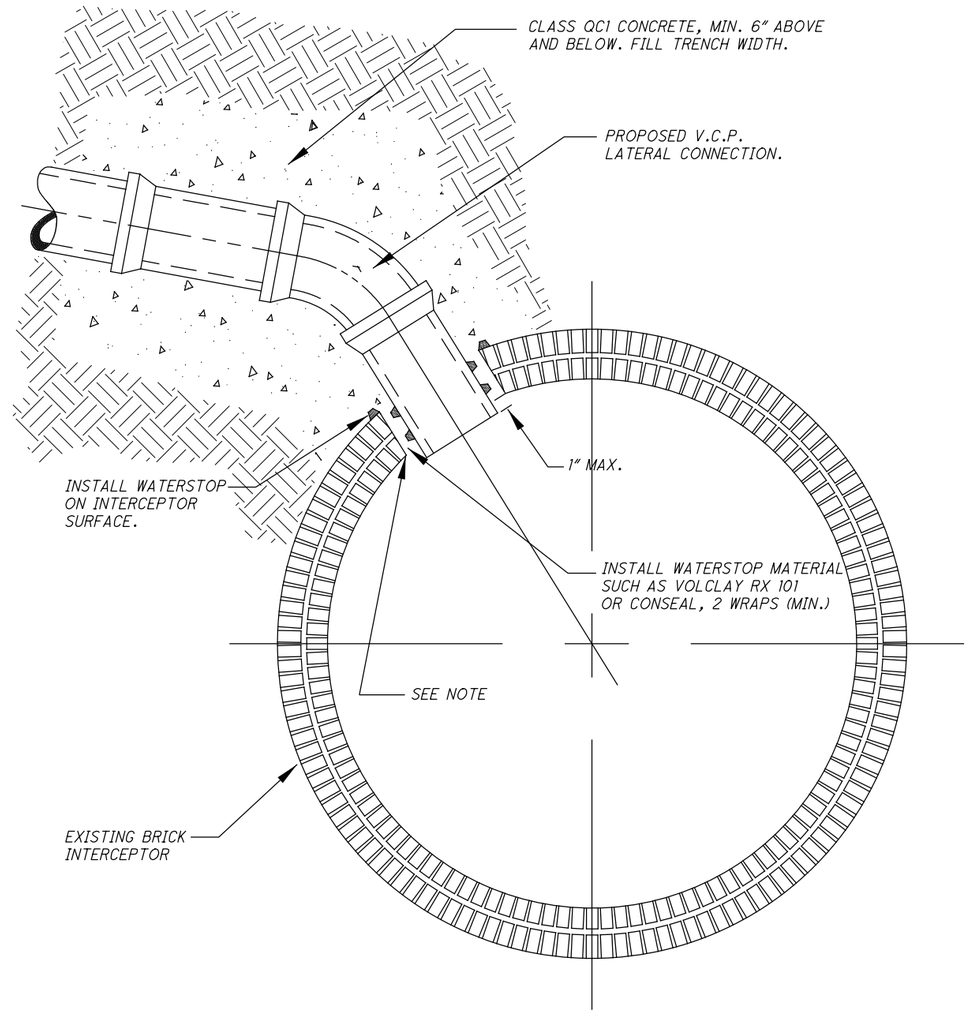

NO.	DATE	DESCRIPTION
0	2020-01-27	RFC

ISSUE RECORD

DRAINAGE DETAILS - BLIND CONNECTION

RECORD PLANS

CUY-IR490/SR010-2.09/19.28

RECORD PLANS

BU-17A - GCRTA WYE TRACK
...\Sheets\96833_DD501.dgn 3/31/2020 4:36:10 PM Jonathan.Shurilla

NOTES:

DUCTILE IRON OR CAST IRON COVERS (DISCS) SHALL CONFORM TO ITEM 604 AND BE PAINTED YELLOW ON SANITARY SEWER LATERALS. NEENAH NO. R-4055-6, EAST JORDAN NO. 6306 OR APPROVED EQUAL CASTINGS ARE ACCEPTABLE, PROVIDED THEY COMPLY WITH THE SPECIFICATIONS, DIMENSIONS AND EIGHT (8) POUND(3.6kg) MINIMUM WEIGHT.

THE CONTRACTOR SHALL RECORD THE LOCATION OF RISER (BY STATION AND OFFSET) IN A SUITABLE FIELDBOOK .THE FIELDBOOK SHALL BE GIVEN TO THE PROJECT ENGINEER UPON COMPLETION OF THE WORK.

TEST TEES ARE TYPICALLY LOCATED ONE (1) FOOT (0.3m) TO TWO (2) FOOT (0.6m) BEHIND THE STREET RIGHT-OF-WAY LINE.

WHERE IT BECOMES NECESSARY TO PLACE OR REPLACE TEST TEES WITHIN PAVED AREAS (LOCATE OR RELOCATE OUTSIDE PAVED AREAS WHERE POSSIBLE) THEY SHALL BE SET TO FINISHED PAVED SURFACE GRADE PER DETAIL "A" UTILIZING THE SPECIAL FITTINGS, ADAPTERS AND CAPS SHOWN THEREON OR AS OTHERWISE APPROVED BY THE ENGINEER.

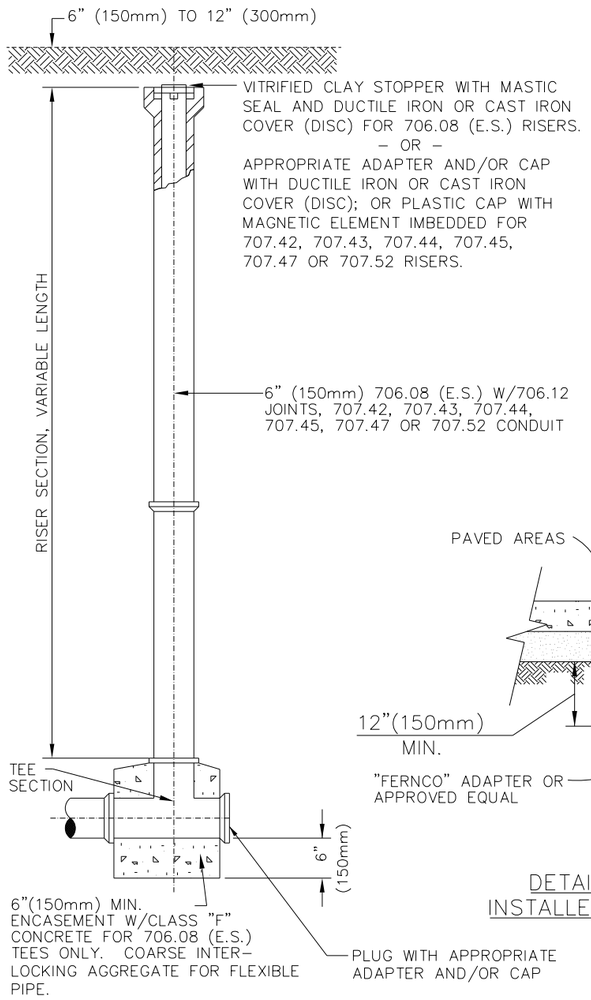

DO NOT ENCASE 707.42, 707.43, 707.44, 707.45, 707.47 OR 707.52

ITEM 604–MISC: TEST TEE

12"(300mm) X 12"(300mm) TEST TEE & 6"(150mm) RISER FOR LATERAL CONNECTIONS TO STORM SEWERS, SANITARY SEWERS AND TREATED SEPTIC FLOW OUTLETTED DIRECTLY INTO STORM SEWERS

(NO SCALE)

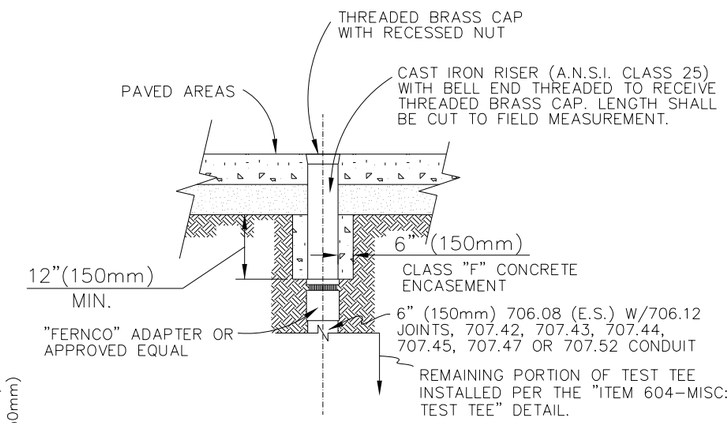

DETAIL "A" TEST TEE INSTALLED IN PAVED AREAS

(NO SCALE)

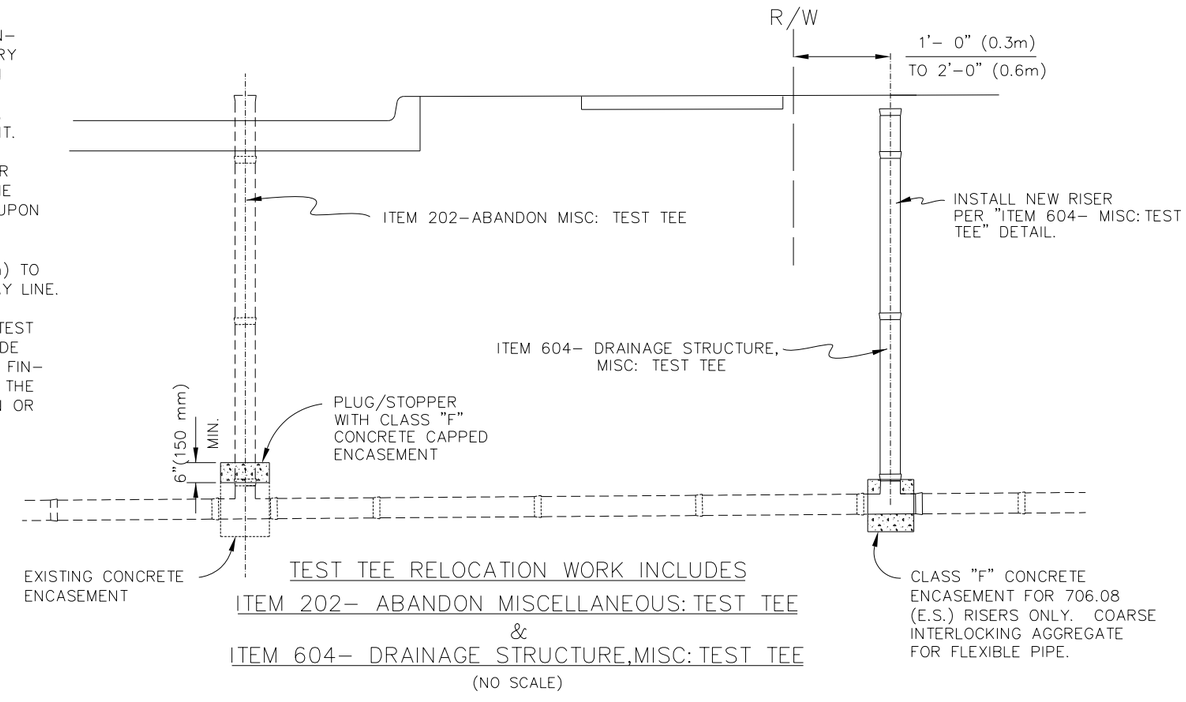

TEST TEE RELOCATION WORK INCLUDES ITEM 202– ABANDON MISCELLANEOUS: TEST TEE & ITEM 604– DRAINAGE STRUCTURE,MISC: TEST TEE

(NO SCALE)

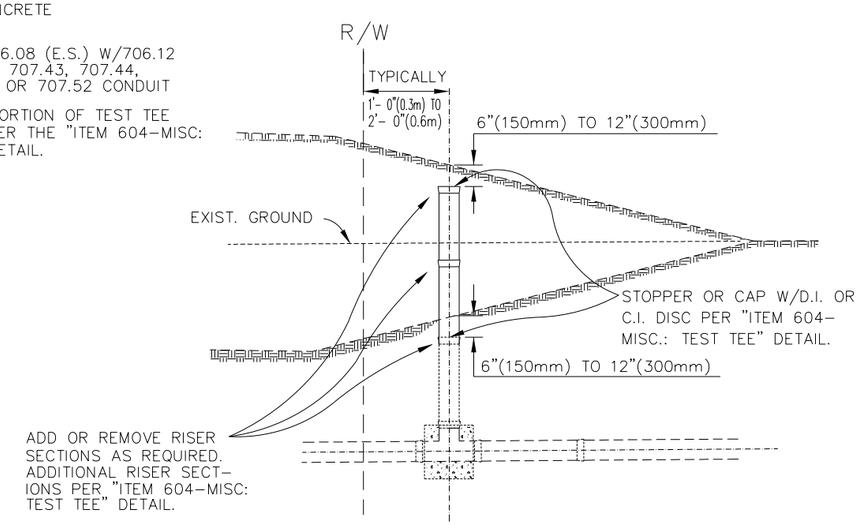

ITEM 604 – DRAINAGE STRUCTURE, MISC.: TEST TEE ADJUSTED OR RECONSTRUCTED TO GRADE

(NO SCALE)

NOTES:

1. "TEST TEE" SHALL BE BE INSTALLED, ADJUSTED OR RECONSTRUCTED TO GRADE AT SUCH LOCATIONS SHOWN ON THE PLAN AND/OR AS DETERMINED BY THE ENGINEER IN THE FIELD.
2. PAYMENT FOR TEST TEE, TEST TEE ADJUSTED TO GRADE, OR TEST TEE RECONSTRUCTED TO GRADE SHALL INCLUDE EXCAVATION, PIPE REMOVED, NEW RISER PIPE, PIPE SPECIALS, CONCRETE ENCASEMENT, STOPPERS, RESTORATION OF EXISTING PIPE DISTURBED OR DAMAGED AND NATURAL AGGREGATE BACKFILL AS REQUIRED TO COMPLETE THE WORK AS SHOWN HEREON OR AS OTHERWISE DIRECTED BY THE ENGINEER.
3. TEST TEE RELOCATION WORK SHALL CONSIST OF "ITEM 202– ABANDON MISCELLANEOUS: TEST TEE" AND "ITEM 604–DRAINAGE STRUCTURE, MISC: TEST TEE" AS DIRECTED BY THE ENGINEER IN THE FIELD. PAYMENT FOR TEST TEE ABANDONED TO INCLUDE EXCAVATION, PIPE REMOVAL, PLUGGING AND ENCASEMENT OF EXISTING TEE, AND BACKFILL AS REQUIRED TO COMPLETE THE WORK AS SHOWN HEREON OR AS OTHERWISE DIRECTED BY THE ENGINEER.

NO.	DATE	DESCRIPTION
0	2020-01-27	RFC

ISSUE RECORD

DRAINAGE DETAILS - TEST TEE

RECORD PLANS

CUY-IR490/SR010-2.09/19.28

RECORD PLANS

BU-17A - GCRTA WYE TRACK
...\Sheets\96833_DD502.dgn 3/31/2020 4:36:35 PM Jonathan.Shurilla

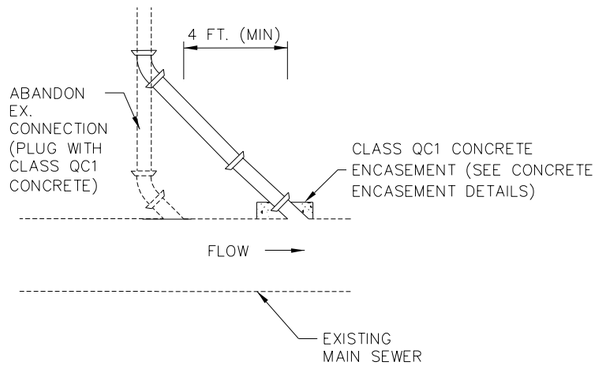

SANITARY CONNECTION LOWERING PLAN VIEW
NOT TO SCALE

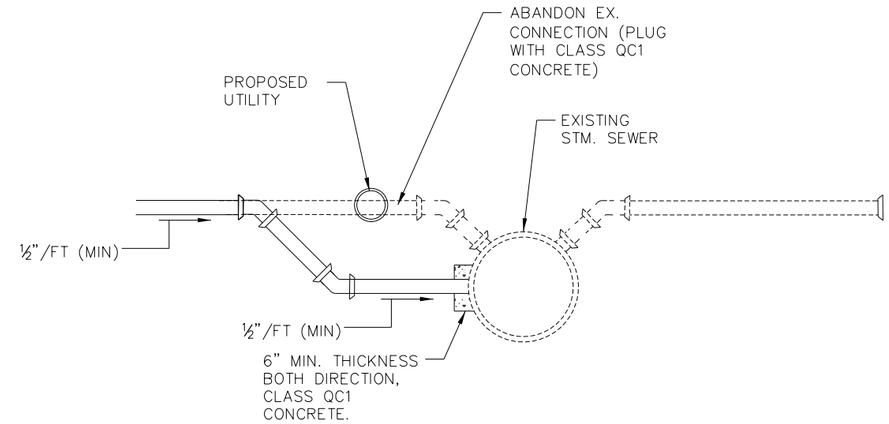

SEWER CONNECTION LOWERING SECTION VIEW
NOT TO SCALE

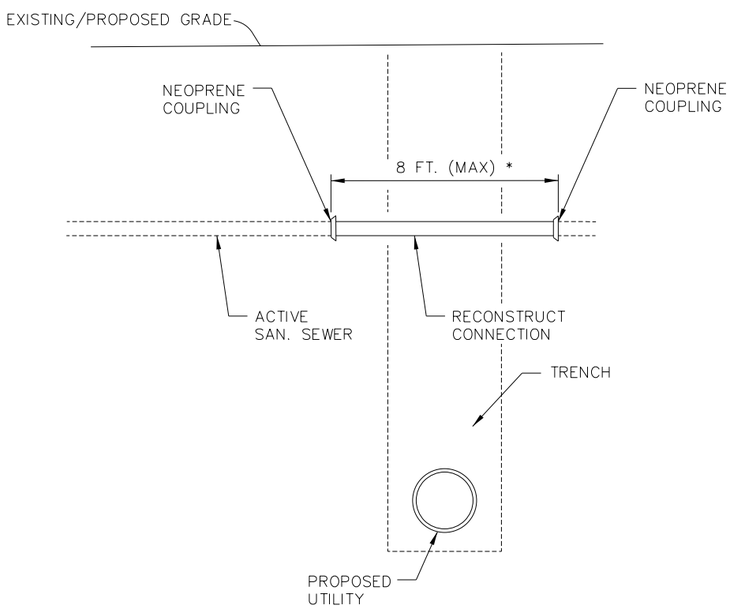

SANITARY CONNECTION TRENCH DETAIL
NOT TO SCALE

* ESTIMATED LENGTH OVER TRENCH.

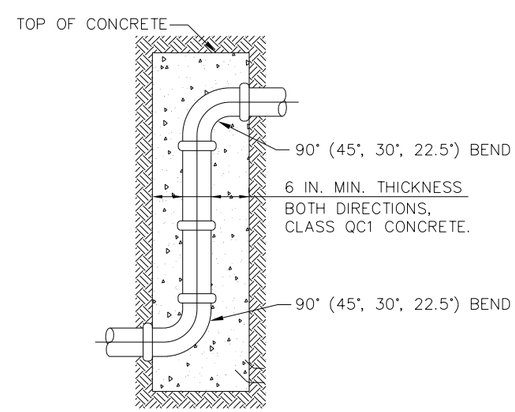

TYPICAL SEWER RISER DETAIL
NOT TO SCALE

NOTES

1.) ABANDON ALL INACTIVE STORM AND SANITARY CONNECTIONS IMPACTED BY CONSTRUCTION.

2.) EXISTING CONNECTIONS ARE ANTICIPATED TO RANGE FROM 5" TO 8". EXISTING 5" & 6" CONNECTIONS SHALL BE REPLACED WITH ITEM 611 – 6" CONDUIT, TYPE B(C), 706.08 WITH 706.12 JOINTS.

NO.	DATE	DESCRIPTION
0	2020-01-27	RFC

ISSUE RECORD

DRAINAGE DETAILS - SANITARY LOWERING

RECORD PLANS

CUY-IR490/SR010-2.09/19.28

RECORD PLANS

BU-17A - GCRTA WYE TRACK
...\Sheets\96833_DD503.dgn 3/31/2020 4:36:57 PM Jonathan.Shurilla

NOTE:
ENCASEMENT REQUIRED WHEN PIPE CLEARANCE IS LESS THAN 18 IN.

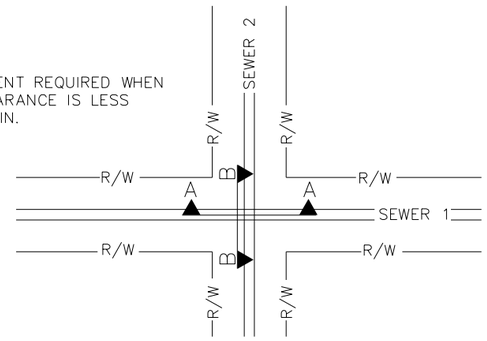

PLAN VIEW

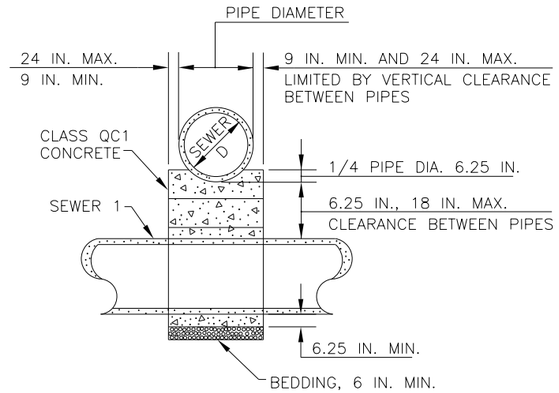

SECTION A–A

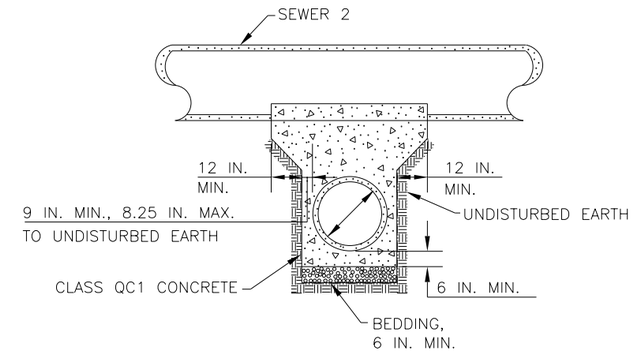

SECTION B–B

ITEM 611
STANDARD CONCRETE ENCASEMENT
(MONOLITHIC CRADLING OF UPPER PIPE)
NOT TO SCALE

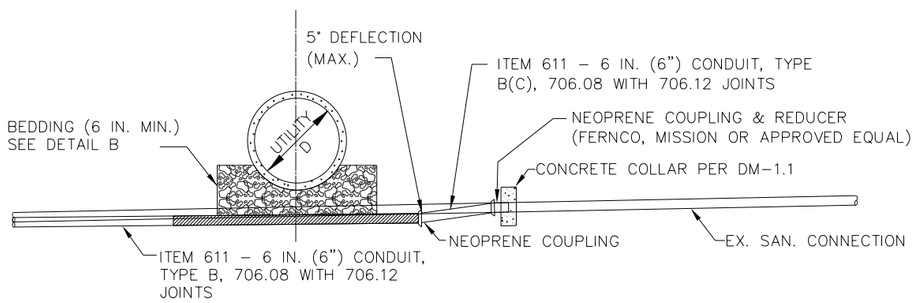

DETAIL A
NOT TO SCALE

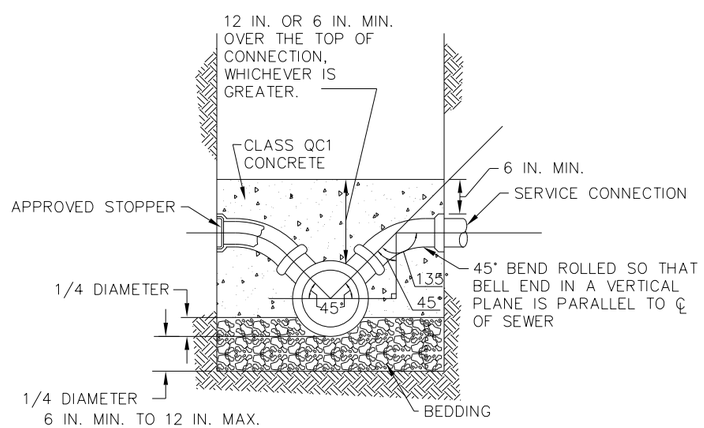

TYPICAL SEWER Y BRANCH DETAIL
NOT TO SCALE

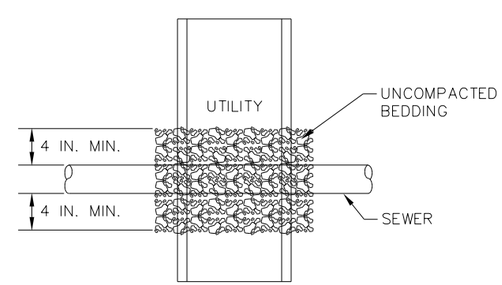

DETAIL B
NOT TO SCALE

NOTES:

1. EXISTING SEWER CONNECTION SHALL ONLY BE LOWERED IF FOUND TO BE IN CONFLICT WITH THE PROPOSED CONDUIT. SEE SEWER CONNECTION LOWERING DETAILS FOR NECESSARY VERTICAL RELOCATIONS WHICH ARE GREATER IN DEPTH THAN 18.5 IN.

2. FOR VERTICAL RELOCATIONS LESS THAN 4.5 IN., THE LOWERING SHALL BE ACCOMPLISHED BY MEANS OF A DEFLECTION AT THE PIPE JOINT. THIS DEFLECTION SHALL NOT EXCEED 5° OR THE MAXIMUM ALLOWABLE DEFLECTION AS RECOMMENDED BY THE MANUFACTURER. SEE DETAIL A.

3. FOR VERTICAL RELOCATIONS BETWEEN 4.5 IN. AND 18.5 IN. SHALL BE ACHIEVED BY USING SHORT RADIUS CURVE FITTINGS OF 22.5°, 30°, 45°, OR OTHER SUITABLE FITTINGS APPROVED BY THE ENGINEER. THE FITTINGS TO BE USED SHALL BE THAT WHICH MINIMIZES THE LENGTH OF SEWER CONNECTION REPLACEMENT.

4. TEE CONNECTIONS SHALL BE MADE AT AN ELEVATION ABOVE THE SPRING LINE OF THE LONGITUDINAL SEWER, WHERE POSSIBLE.

5. ALL NECESSARY BENDS, BRANCHES, COLLARS, FITTINGS, TEES, CONCRETE ENCASEMENTS, COUPLINGS, AND REDUCERS SHALL BE INCLUDED IN PAYMENT FOR THE APPROPRIATE ITEM 611 – CONDUIT PAY ITEM.

NO.	DATE	DESCRIPTION
0	2020-01-27	RFC

ISSUE RECORD

DRAINAGE DETAILS - SANITARY ENCASEMENT

RECORD PLANS

CUY-IR490/SR010-2.09/19.28

RECORD PLANS

BU-17A - GCRTA WYE TRACK
...\Sheets\96833_DD504.dgn 3/31/2020 4:37:18 PM Jonathan.Shurilla

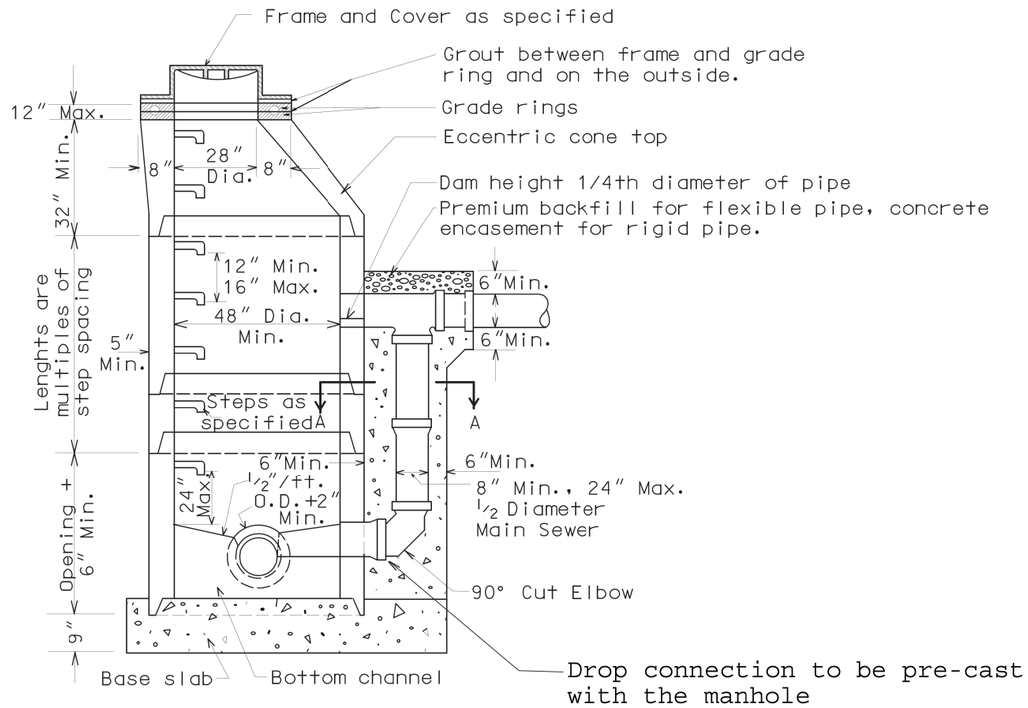

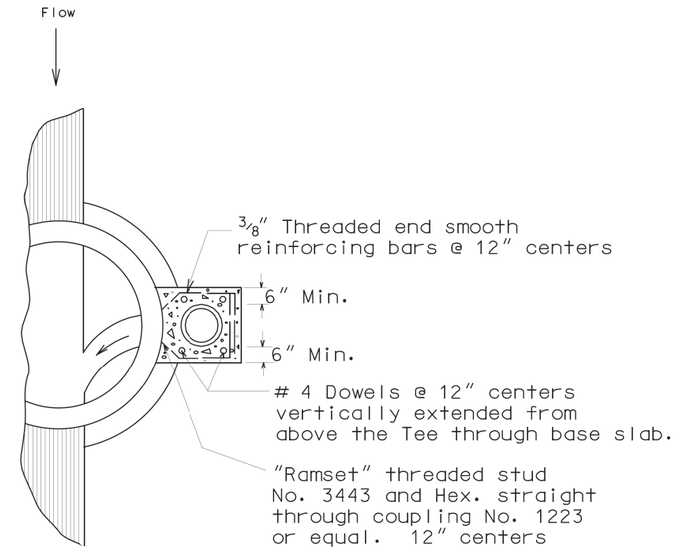

SECTION A – A.

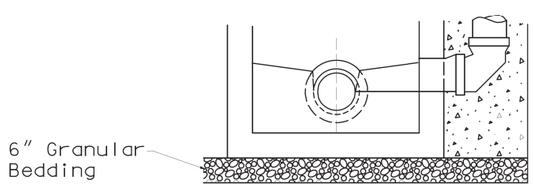

ALTERNATE

NOTE: This bedding with precast base on manhole.

MODIFIED

PRECAST CONCRETE DROP MANHOLE

REVISIONS:	SCALE NO SCALE	DATE : DEC. 1998

UNIFORM STANDARDS: CLEVELAND --- CUYAHOGA COUNTY --- NORTHEAST OHIO REGIONAL SEWER DISTRICT

Sheet No. 6/27

NO.	DATE	DESCRIPTION
0	2020-01-27	RFC

ISSUE RECORD

DRAINAGE DETAILS - MANHOLE DROP

RECORD PLANS

CUY-IR490/SR010-2.09/19.28

RECORD PLANS

31/106

BU-17A - GCRTA WYE TRACK

...\Sheets\96833_DD505.dgn 3/31/2020 4:37:41 PM Jonathan.Shurilla

Use EJIW 1700 for manhole cover with vented holes and casting or approved equal

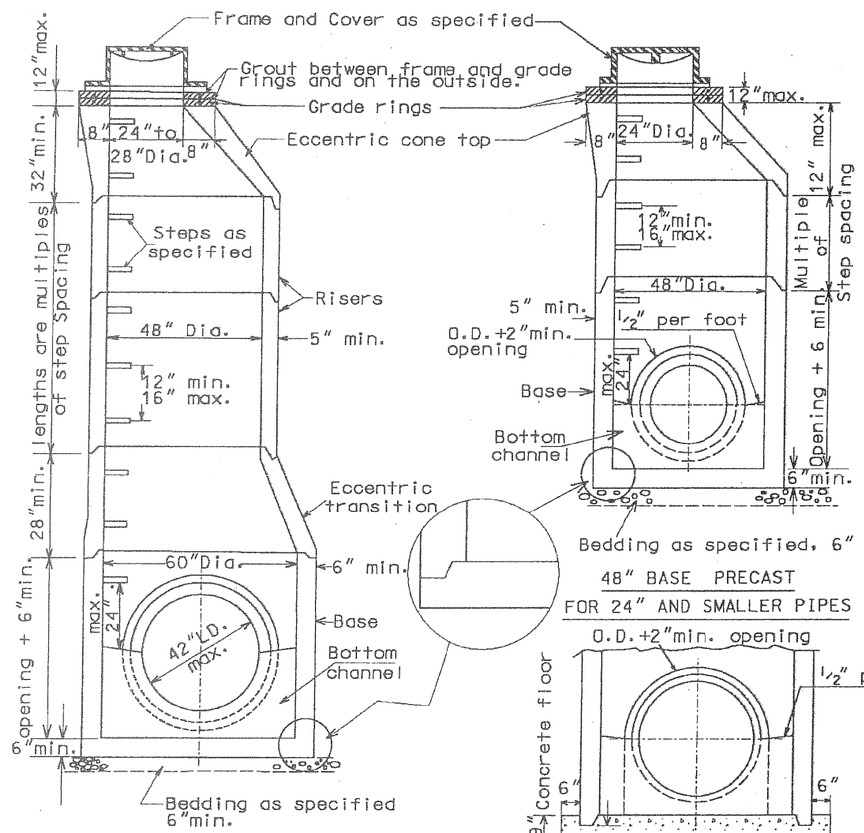

60" BASE FOR PRECAST

42" AND SMALLER PIPES

48" BASE PRECAST

FOR 24" AND SMALLER PIPES

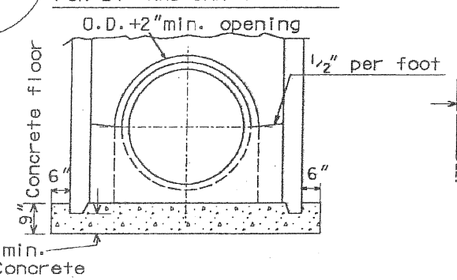

60" BASE FOR CAST IN PLACE

36" AND SMALLER PIPES

48" BASE FOR CAST IN PLACE

18" AND SMALLER PIPES

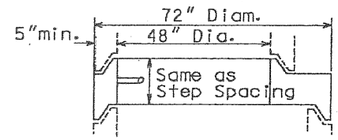

FLAT SLAB

TRANSITION

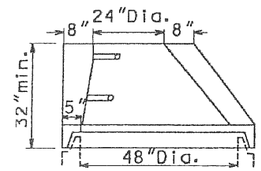

ALTERNATE

ECCENTRIC CONE TOP

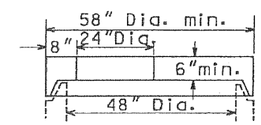

FLAT SLAB TOP

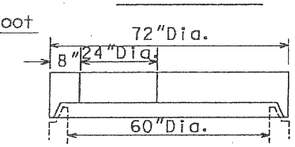

FLAT SLAB TOP

NOTES

Sections of the precast manhole shall be cast and assembled with either all tongue or all groove ends up. Lift holes may be provided in each section for handling.

TOP AND TRANSITION /or reducer/
Sections may be either eccentric cone, concentric cone or flat slab.
BASES for Manholes are shown with monolithic floor and riser which may be cast in one or two operations.
A permissible alternate is to cast and ship the floor and barrel separately. Openings for inlet and outlet pipes shall be provided, either when the unit is cast or later, to meet project requirements. Bottom channels may be formed of concrete precast in the base or by field construction. Floors may also be poured in place.

OPENINGS IN RISER SECTIONS for 18" and smaller inlet pipes shall be prefabricated. Flexible connections shall be provided for sanitary and combined sewers. Premium seals shall meet A.S.T.M C-923.

JOINT SEALS between precast manhole sections and sewers shall be resilient and flexible gasket joints shall meet A.S.T.M C-443, FEDERAL SPECIFICATIONS SS-S-00210 (210 A) and AASHTO M-198

MANHOLE JOINTS and GRADE RINGS shall be sealed externally and between the grade rings with a layer of mastic compound such as Faberlite, Kent Seal or equal.

MATERIALS for bases and other precast sections including reinforcement not specified hereon, shall comply with the specifications.

PRECAST MANHOLES shall conform to the requirements of A.S.T.M C-478.

SEAL all lift holes with approved concrete plugs.

LANDING PLATFORMS as shown on the LANDING DETAILS shall be installed in manholes that are over 28 feet deep to the invert with a maximum vertical spacing of 20 feet.

MANHOLE FRAMES - chimney seals will be required on all new sanitary manholes.

A minimum 3" vertical wall is required below the casting for installation of chimney seals.

PRECAST CONCRETE MANHOLE

42" PIPE OR SMALLER

REVISIONS:	SCALE NO SCALE	DATE : DEC. 1998

UNIFORM STANDARDS: CLEVELAND --- CUYAHOGA COUNTY --- NORTHEAST OHIO REGIONAL SEWER DISTRICT

NO.	DATE	DESCRIPTION
0	2020-01-27	RFC

ISSUE RECORD

DRAINAGE DETAILS - SANITARY SMALL MANHOLE

RECORD PLANS

CUY-IR490/SR010-2.09/19.28

RECORD PLANS

BU-17A - GCRTA WYE TRACK
...\Sheets\96833_DD506.dgn 3/31/2020 4:38:17 PM Jonathan.Shurilla

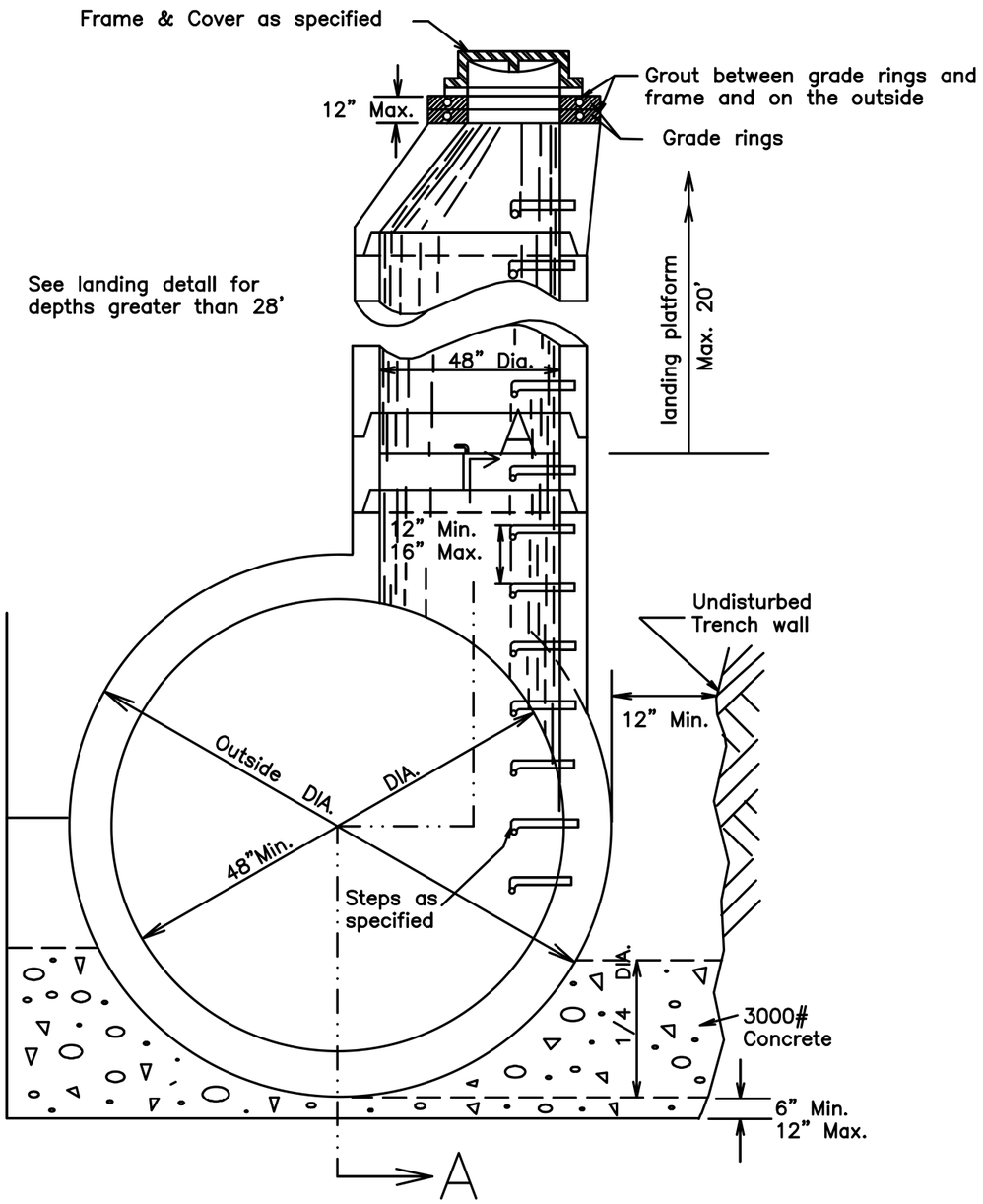

ELEVATION

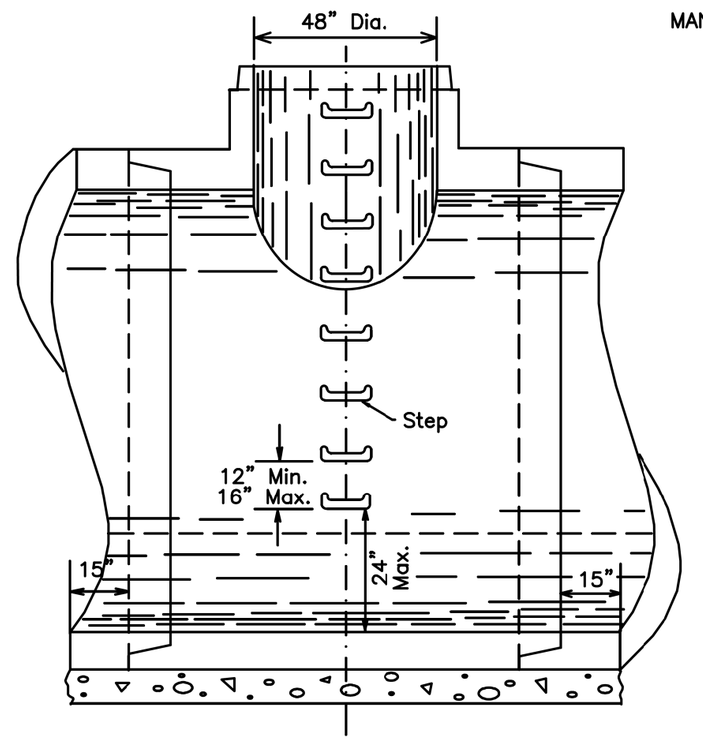

SECTION A – A

NOTES

MANHOLE shall consist of the design shown hereon with precast base materials.
Other manhole components above the base shall be as detailed or specified.

THIS MANHOLE is not designed for static or dynamic highway loads, In case of highway loads, a special detail wil be required.

BEDDING shall be the same as is used under the adjoining conduits.

MORTAR to be PORTLAND CEMENT as specified.

MANHOLE STEPS conform to O.S.H.A. standards.

PRECAST CONCRETE MANHOLE

48" PIPE OR LARGER

REVISIONS:

SCALE	DATE
NO SCALE	: DEC. 1998

UNIFORM STANDARDS: CLEVELAND --- CUYAHOGA COUNTY --- NORTHEAST OHIO REGIONAL SEWER DISTRICT

NO.	DATE	DESCRIPTION
0	2020-01-27	RFC

ISSUE RECORD

DRAINAGE DETAILS - SANITARY LARGE MANHOLE

RECORD PLANS

RECORD PLANS

CUY-IR490/SR010-2.09/19.28

RECORD PLANS

BU-17A - GCRTA WYE TRACK
...\Sheets\96833_DD507.dgn 3/31/2020 4:39:17 PM Jonathan.Shurilla

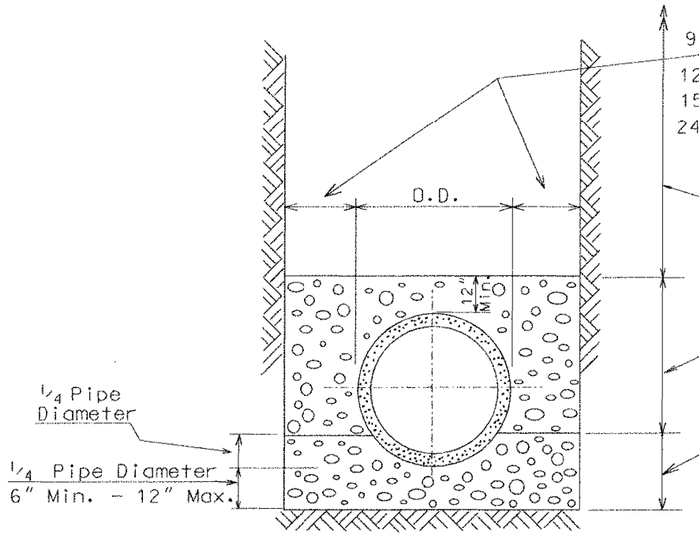

TYPICAL TRENCH DETAIL
(FLEXIBLE PIPE)

Trench width and concrete cradle width shall be O.D. of pipe plus 9" on each side of pipe.

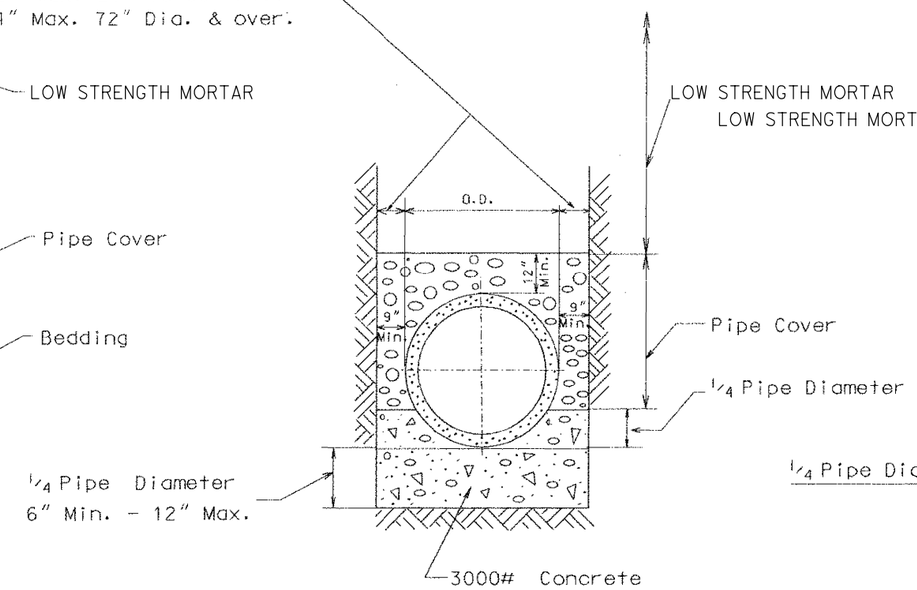

TYPICAL TRENCH DETAIL
WITH CONCRETE CRADLE

NOTE:

Lateral connections to have a minimum bedding depth of 3" coarse aggregate.

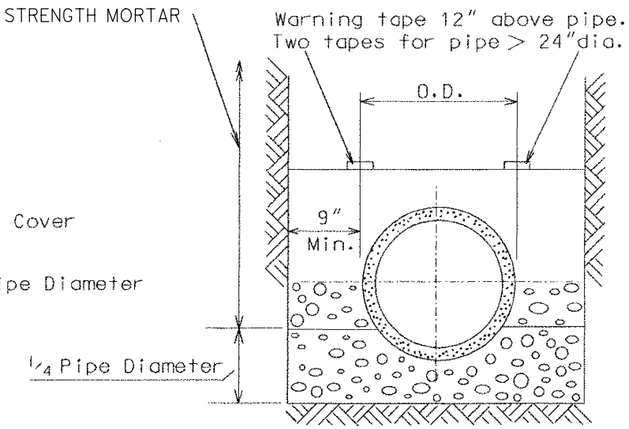

TYPICAL TRENCH DETAIL
FOR CONCRETE OR DUCTILE IRON PIPE

Pipe Cover shall consist of coarse interlocking aggregate no. 57,6,67,68,7,78,or8.

Bedding shall consist of coarse interlocking aggregate no.57,6,67, 68, 7, 78, or 8 for 60" or smaller diameter pipe. For 66" or larger diameter pipe no. 4 aggregate may also be used.

For concrete and ductile iron pipe, pipe cover is to the springline or greater.

TYPICAL TRENCH DETAILS

REVISIONS:	SCALE NO SCALE	DATE : DEC. 1998

UNIFORM STANDARDS: CLEVELAND --- CUYAHOGA COUNTY --- NORTHEAST OHIO REGIONAL SEWER DISTRICT

Sheet No. 11/27

NO.	DATE	DESCRIPTION
0	2020-01-27	RFC

ISSUE RECORD

DRAINAGE TRENCH DETAILS

RECORD PLANS

CUY-IR490/SR010-2.09/19.28

RECORD PLANS

BU-17A - GCRTA WYE TRACK
...\Sheets\96833_DD508.dgn 3/31/2020 4:39:56 PM Jonathan.Shurilla

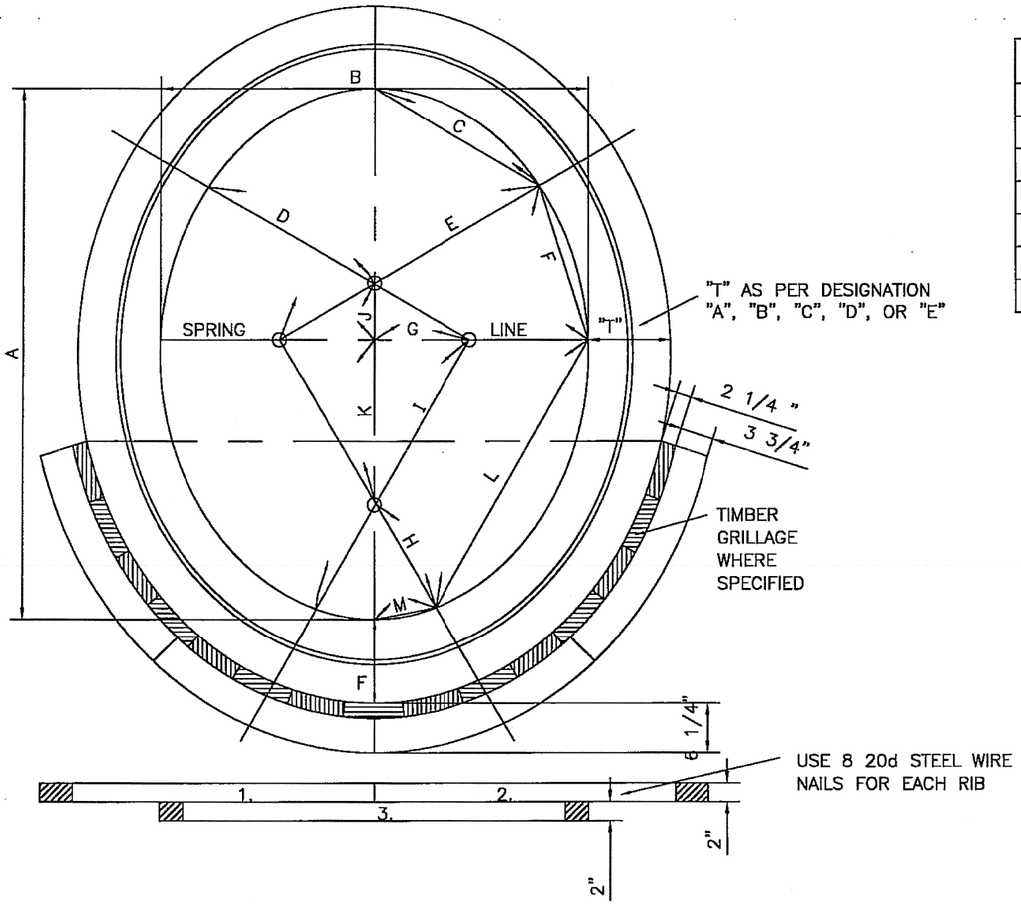

EGG SHAPED SEWERS					NO.	H FEET	W FEET	S FEET	AREA SQ. FT.	NO.	H FEET	W FEET	S FEET	AREA SQ. FT.
NO.	H FEET	W FEET	S FEET	AREA SQ. FT.	8	5.12	4.04	2.71	16.00	15	7.79	6.14	4.12	36.99
2	2.25	1.94	1.28	3.41	9	5.54	4.37	2.93	18.72	16	8.13	6.41	4.30	40.32
3	2.75	2.23	1.64	4.75	10	5.94	4.69	3.14	21.54	17	8.47	6.68	4.47	43.71
4	3.23	2.54	1.70	6.35	11	6.33	4.99	3.35	24.46	18	8.79	6.94	4.65	47.17
5	3.74	2.95	1.98	8.55	12	6.71	5.29	3.55	27.47	19	9.12	7.19	4.82	50.70
6	4.23	3.34	2.23	10.90	13	7.08	5.58	3.74	30.57	20	9.43	7.44	4.98	54.29
7	4.69	3.70	2.48	13.39	14	7.44	5.87	3.93	33.74					

TYPES OF EGG SHAPED SEWERS

"A"–1 RING OF BRICK ALL AROUND.
"B"–1 RING OF BRICK ALL AROUND & 1 RING EXTRA ON ARCH.
"C"–2 RINGS OF BRICK ALL AROUND .
"D"–2 RINGS OF BRICK ALL AROUND & 1 RING EXTRA ON ARCH.
"E"–3 RINGS OF BRICK ALL AROUND.

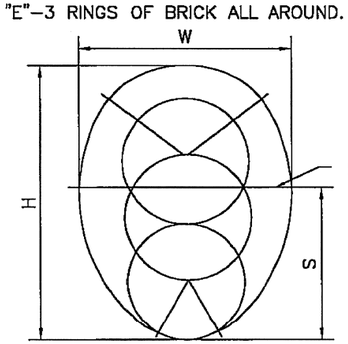

FOR RECORD ONLY

TABULAR DIMENSIONS FOR EGG SHAPED SEWERS NO.2 TO NO. 8													
NO.	A	B	C	D	E	F	G	H	I	J	K	L	M
2	2'–3"	1'–11 1/4"					6 3/8"	9"	1'–6"		6 3/8"		
3	2'–9"	2'–2 3/4"					10 5/8"	9"	2'–0"		10 5/8"		
4	3'–2 3/4"	2'–6 5/8"	1'–2 1/8"	1'–2 1/8"	1'–10 1/2"	11 1/2"	7 3/16"	8 1/8"	1'–10 1/2"	4 1/16"	12 3/16"	1'–10 1/2"	4 1/4"
5	3'–9"	2'–11 3/8"	1'–4 3/8"	1'–4 3/8"	2'–1 7/8"	1'–1 3/8"	8 3/16"	9 1/2"	2'–1 7/8"	4 3/4"	1'–2 1/4"	2'–1 7/8"	4 7/8"
6	4'–2 3/4"	3'–4"	1'–6 1/2'	1'–6 1/2'	2'–5 1/4"	1'–3 1/8"	9 1/4"	10 3/4"	2'–5 1/4"	5 3/8"	1'–4 1/8"	2'–5 1/4"	5 1/2"
7	4'–8 1/4"	3'–8 3/8"	1'–8 1/2"	1'–8 1/2"	2'–8 1/2"	1'–4 3/4"	10 5/16"	11 7/8"	2'–8 1/2"	5 15/16"	1'–5 13/16"	2'–8 1/2"	6 1/8"
8	5'–1 1/2"	4'–0 1/2"	1'–10 1/2"	1'–10 1/2"	2'–11 1/2"	1'–6 1/4"	11 1/4"	1'–1"	2'–11 1/2"	6 1/2"	1'–7 1/2"	2'–11 1/2"	6 3/4"

CITY OF CLEVELAND
DEPARTMENT OF PUBLIC SERVICE
DIVISION OF ENGINEERING & CONSTRUCTION
JOMARIE WASIK–DIRECTOR OF PUBLIC SERVICE
STANDARD CONSTRUCTION DRAWING
STANDARD PLAN FOR EGG SHAPED SEWERS
DIMENSIONS & AREAS
NOT TO SCALE

DRAWN BY: R. PLIODZINSKAS DATE: 4/8/08
SUBMITTED BY: W. McLAUGHLIN DATE: 4/8/08
APPROVED: DATE: 7-8-08
COMMISSIONER OF ENGINEERING & CONSTRUCTION

FILE NO. 73M | (24)

NO.	DATE	DESCRIPTION
0	2020-01-27	RFC

ISSUE RECORD

CALCULATED KMD CHECKED SM

EGG SEWER DETAIL

RECORD PLANS

CUY-IR490/SR010-2.09/19.28

RECORD PLANS

35/106

BU-17A - GCRTA WYE TRACK
...\Sheets\96833_DD509.dgn 3/31/2020 4:40:54 PM Jonathan.Shurilla

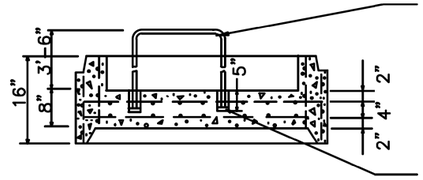

1 1/2 " Dia. Solid steel bar Hand Rail

2 1/4 " Dia. Steel plate 3/4 " thick welded to both ends of 1 1/2 " steel bar with two passes of 1/4 " fillet weld.

SECTION A – A

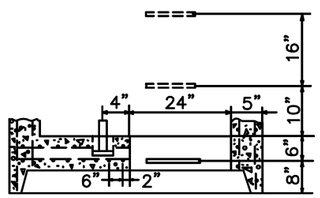

SECTION B – B

NOTE:

Landing Platforms as shown on the Landing Details shall be installed in manholes that are over 28 feet deep to the invert with a maximum vertical spacing of 20 feet.

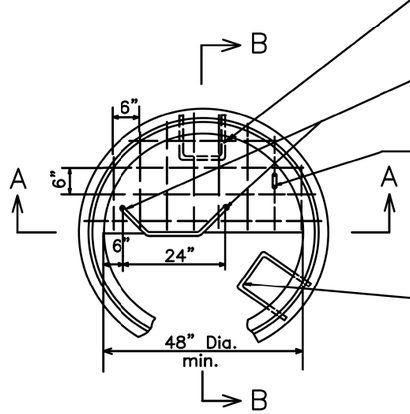

PLAN VIEW

Manhole steps start 12" to 16" above landing platform floor and continue vertically above to the next landing platform or top outlet

Two 2 1/2 " Dia. Precast openings 5" deep.

Typical bar placement in landing riser – #4 Rebar.

If multiple landings are required rotate adjacent landings 90° A 90° clear opening must be seen from top to bottom of manhole.

Manhole steps stop 4' above top of landing platform.

16" LANDING RISER DETAIL FOR PRECAST MANHOLE

REVISIONS:	SCALE NO SCALE	DATE : DEC. 1998

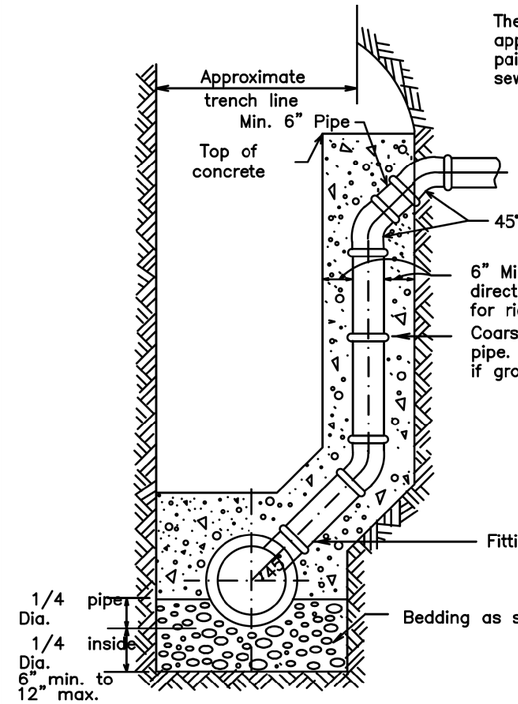

The pipe shall be plugged with approved stopper. Stopper shall be painted yellow for the sanitary sewer connection.

45° Bends

6" Minimum thickness in both directions, 3000 # concrete for rigid pipe.

Coarse interlocking aggregate for flexible pipe. (Encasement in concrete is required if ground cover is less than 3 feet).

Clay and concrete pipe concrete shall extend 24" each way from the service connection for flexible pipe 12".

Fittings as needed, see Y Branch Detail.

Bedding as specified

TYPICAL RISER DETAIL

REVISIONS:	SCALE NO SCALE	DATE : APRIL 2015

CUYAHOGA COUNTY DEPARTMENT OF PUBLIC WORKS – SANITARY DEPARTMENT DETAIL

Sheet No. 9–A/27

NO.	DATE	DESCRIPTION
0	2020-01-27	RFC

ISSUE RECORD

CALCULATED KMD
CHECKED SM

RECORD PLANS

RISER DETAILS

RECORD PLANS

CUY-IR490/ SR010-
2.09/ 19.28

RECORD PLANS

36
106

BU-17A - GCRTA WYE TRACK
...\Sheets\96833_DD510.dgn 3/31/2020 4:41:37 PM Jonathan.Shurilla

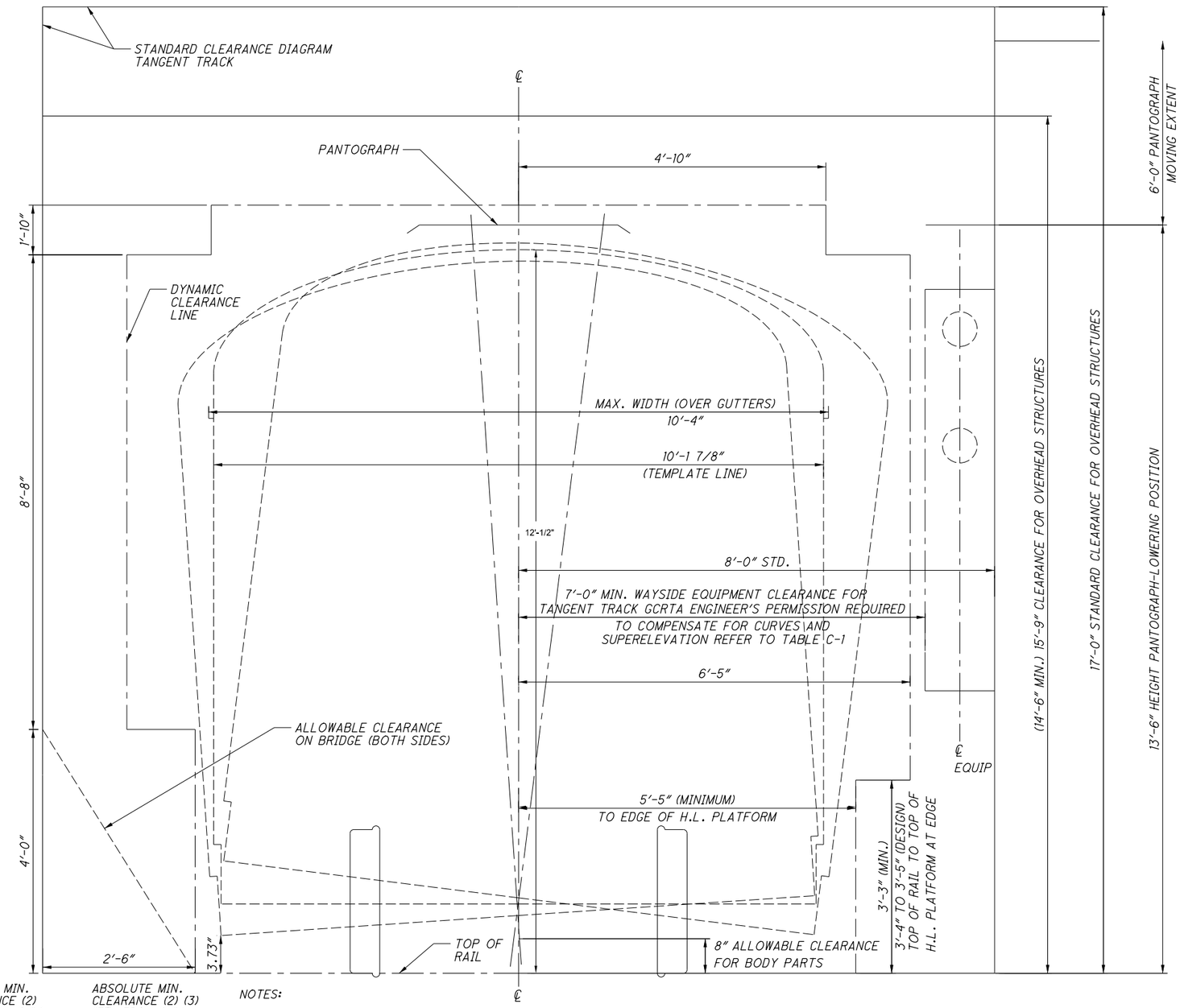

TABLE C-1
TRACK CLEARANCE ADDITIONS FOR CURVES

NOTE: ADDITIONS FOR TRACK SUPERELEVATIONS MUST BE SEPERATELY ADDED.

CURVATURE DEGREE	CURVATURE RADIUS	1/2 CAR WIDTH (FT.)	MIDBODY OVERHANG (FT. FROM CAR C/L)	ACTUAL WIDTH (FT.) BASE	ACTUAL WIDTH (FT.) WITH BROKEN AIR SPRING (1)	DESIRED MIN. CLEARANCE (2) (FT. FROM C/L)	ABSOLUTE MIN. CLEARANCE (2) (3) (FT. FROM C/L)
I HEAVY RAIL VEHICLE-TOKYU							
TANGENT	...	5.17	...	5.17	5.88	8.00	7.00
5-00'	1146	5.17	0.47	5.64	6.35	8.47	7.47
10-00'	573	5.17	0.77	5.94	6.65	8.77	7.77
15-00'	382	5.17	1.07	6.24	6.95	9.07	8.07
20-00'	286	5.17	1.37	6.54	7.25	9.37	8.37
25-00'	229	5.17	1.67	6.84	7.55	9.67	8.67
A. SUPERELEVATION ADDITION FOR HRV-1':0.19' :2":0.37' :3":0.56':4":0.74'							
II- LIGHT RAIL VEHICLE II-BREDA (CLARANCE SET BY REAR VIEW MIRROR AT END OF CAR)							
TANGENT	...	5.63	...	5.63	5.82	8.00	7.00
5-00'	1146	5.63	0.25	5.88	6.07	8.25	7.25
10-00'	573	5.63	0.50	6.13	6.32	8.50	7.50
15-00'	382	5.63	0.75	6.38	6.57	8.75	7.75
20-00'	286	5.63	1.00	6.63	6.82	9.00	8.00
25-00'	229	5.63	1.25	6.88	7.07	9.25	8.25

NOTES:

1. BROKEN AIR SPRING-HRV: (8.50" - 0.71 FT.) DISPLACEMENT AT CLEARANCE POINT OF CAR EAVE. BROKEN AIR SPREING-LRV: (2.24- 0.19 FT.) DISPLACEMENT AT CLEARANCE POINT OF CAR EAVE.
2. TANGENT TRACK CLEARANCE FROM GCRTA STANDARDS.
3. ABSOLUTE MINIMUM PERMITTED CLEARANCES SHALL NOT BE USED WITHOUT WRITTEN PERMISSION OF THE (GCRTA) ENGINEER.
4. DYNAMIC CLEARANCE LINE IS BASED UPON TOKYU HEAVY RAIL VEHICLES (REDLINE).
5. H.L. PLATFORM DISTANCES GIVEN SHALL BE VERIFIED BY GCRTA DURING DESIGN.

A. SUPERELEVATION ADDITION FOR LRV-1':0.18' :2":0.36' :3":0.54':4":0.73'

NO.	DATE	DESCRIPTION
0	2020-01-27	RFC

ISSUE RECORD

CALCULATED JW
CHECKED WS

GCRTA STANDARD CLEARANCE DIAGRAM

RECORD PLANS

CUY-IR490/SR010-2.09/19.28

RECORD PLANS

BU-17A - GCRTA WYE TRACK
...\Sheets\BU-17A\96833_TS003.dgn 3/31/2020 4:42:09 PM Jonathan.Shurilla

LEGEND

1. 7"x9"x8'-6" OAK TIMBER TIE, SPACED AT 24" ON CENTER.
2. AREMA #4 OR #4A TRAP ROCK BALLAST 10" MINIMUM, MEASURED FROM BOTTOM OF TIE TO TOP OF SUBBALLAST AT CENTERLINE OF TRACK.
3. SUBBALLAST ODOT 304-AGGREGATE BASE
4. NEW 115RE HEAD HARDENED CWR, BRINELL 383+
5. ODOT 203.03 SUBGRADE/EMBANKMENT AS REQUIRED
6. FILTER FABRIC ODOT TYPE D 712.09 PLACE BETWEEN SUBGRADE AND SUBBALLAST FOR FULL WIDTH OF EMBANKMENT
7. ODOT 203.03M 6" RECYCLED CONCRETE

A DISTANCE FROM ℄ TRACK TO CATENARY POLE (SEE OCS STRUCTURE SUMMARY TABLES)

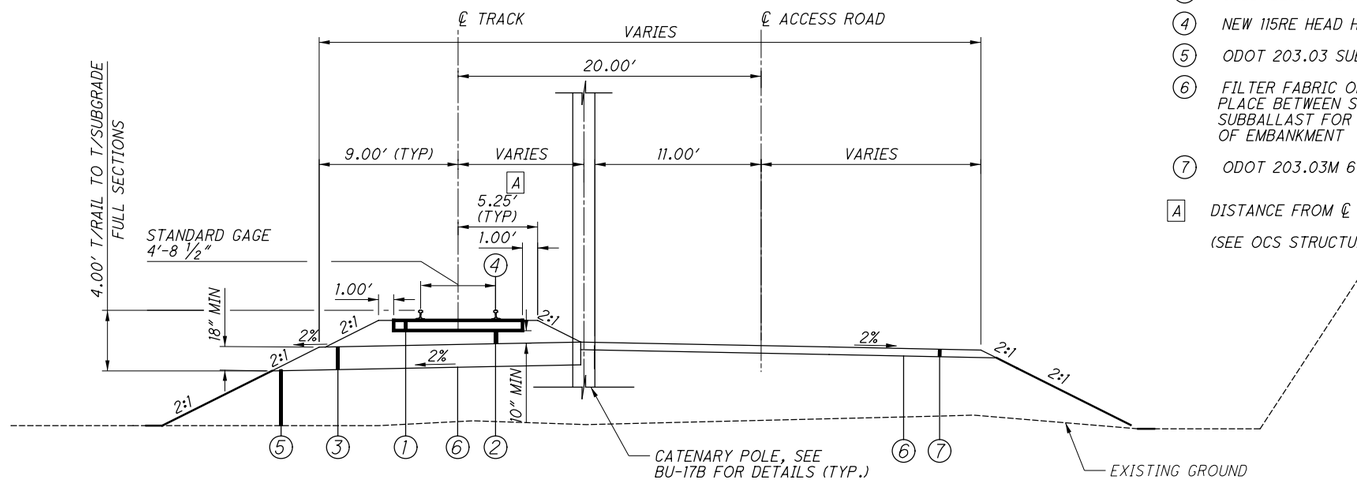

GCRTA TRACK SECTION WITH ACCESS ROAD

STA. 203+50 TO 208+30 GCRTA WEST WYE TRACK (LOOKING UPSTATION)
STA. 300+00 TO 302+00 GCRTA EAST WYE TRACK (LOOKING DOWNSTATION)
SEE CROSS SECTIONS FOR DITCH TREATMENT

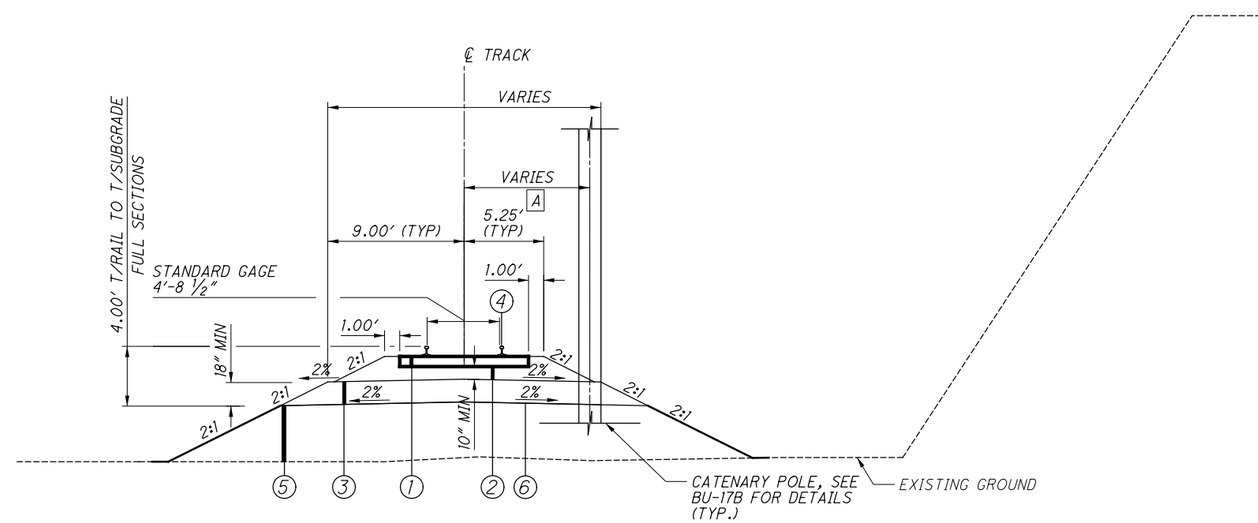

GCRTA TRACK SECTION

STA. 100+75 TO 109+62 GCRTA CONNECTOR TRACK
STA. 200+00 TO 203+50 GCRTA WEST WYE TRACK
STA. 302+00 TO 304+54 GCRTA EAST WYE TRACK
SEE CROSS SECTIONS FOR DITCH TREATMENT

NO.	DATE	DESCRIPTION
0	2020-01-27	RFC

ISSUE RECORD

CALCULATED JW
CHECKED WS

GCRTA CONNECTOR AND WYE TRACK
TYPICAL SECTIONS

RECORD PLANS

CUY-IR490/SR010-2.09/19.28

RECORD PLANS

BU-17A - GCRTA WYE TRACK
...\Sheets\BU-17A\96833_TS002.dgn 3/31/2020 4:42:36 PM Jonathan.Shurilla

RAILROAD OPERATIONS

1.THE CONTRACTOR'S WORK SHALL NOT INTERRUPT THE OPERATIONS OF THE TRANSIT AGENCY WITHOUT PRIOR APPROVAL OF THE GREATER CLEVELAND REGIONAL TRANSIT AUTHORITY (GCRTA).

TRACKWORK NOTES

1. ALL TRACKWORK IS TO BE CONSTRUCTED TO GCRTA STANDARDS. THE FOLLOWING SPECIAL PROVISIONS OF THE GCRTA SHALL GOVERN THE WORK:
   - 33 46 00 - SUBDRAINAGE SYSTEMS
   - 34 05 23 - TRACK CONSTRUCTION
   - 34 11 16 - RAIL
   - 34 11 26 - BALLAST AND SUB BALLAST
   - 34 11 33 - TIMBER TIES
   - 34 11 36 - TRACKWORK FASTENERS, IJ AND OTM

2. CONTRACTOR SHALL FURNISH ALL TRACK MATERIAL, EXISTING TURNOUT SHALL REMAIN THE PROPERTY OF GCRTA.

3. SECOND HAND SCRAP RAIL AND OTM SHALL BECOME THE PROPERTY OF THE CONTRACTOR.

4. ALL RAIL IN TRACK CONSTRUCTED BY THE CONTRACTOR SHALL BE FULLY WELDED, USING EITHER THERMITE OR FLASH BUTT WELDS, INCLUDING ALL JOINTS IN TURNOUTS. ALL FIELD WELDS SHALL BE MAGNETIC PARTICLE TESTED. THE CONTRACTOR SHALL BE RESPONSIBLE FOR ALL FIELD WELDS, TESTING, AND REPORTS.

5. ALL TRACKWORK SHALL BE COORDINATED BY THE CONTRACTOR WITH THE OVERALL PROJECT SCHEDULE AND STAGING REQUIREMENTS.

6. WYE TRACK BALLAST SHALL BE AREMA GRADATION 4 OR 4A ACCORDING TO THE BALLAST SPECIFICATION.

7. BALLAST CONTAMINATED BY FOREIGN MATERIAL DURING CONSTRUCTION SHALL NOT BE USED ON THE PROJECT AND SHALL BE WASTED AT THE CONTRACTORS EXPENSE.

8. TIE SPACING SHALL BE 24" CENTER TO CENTER FOR ALL TRACKS, UNLESS NOTED OTHERWISE.

9. ALL TIE PLATES SHALL BE NEW PANDROL E-CLIP STYLE PLATES SIZED FOR 115# RE REFER TO SHEET 96, GCRTA OTM DETAILS.

10. ALL PANDROL PLATES SHALL BE ANCHORED WITH 4 CUT SPIKES.

11. ALL CWR SHALL BE NEW 115RE HEAD HARDENED, BRINELL 383+, AND BE FULLY WELDED. CONTRACTORS WELDERS SHALL BE GCRTA CERTIFIED WELDERS AND GCRTA APPROVED WELDING KITS SHALL BE USED.

12. ALL TRACK SHALL BE LINED AND SURFACED TO THE LINE AND ELEVATIONS SHOWN ON THE PLANS, USING AN ON-TRACK AUTOMATIC TAMPER/LINER.

13. TIE SPACING SHALL BE MEASURED AT THE ℄ OF TRACK, TIES SHALL BE INSTALLED PERPENDICULAR TO THE RAIL UNLESS OTHERWISE NOTED.

14. ALL RAIL WELDS ARE TO BE PLACED BETWEEN TIES. IF NECESSARY SHIFT TIES AND ADD TIE TO MAINTAIN MAXIMUM TIE SPACING. A MINIMUM OF 20 FEET BETWEEN WELDS ON THE SAME RAIL IS REQUIRED.

15. ALL SPECIAL TRACKWORK SHALL USE "CARBON-STEEL NORDLOCK"SAFETY LOCKING WASHERS OR APPROVED EQUAL.

16. GCRTA MUST HAVE ACCESS TO LOCATION BY VEHICLE AND RAIL AT ALL TIMES IN ORDER TO LOAD MATERIAL.

17. IF EXISTING RAIL SIZE AND PROPOSED RAIL SIZE IS DIFFERENT, COMPROMISE WELDS WILL BE USED.

18. TRACK REMOVAL WILL BE TO BOTTOM OF TIE AND THE REMAINING ROADBED WILL BE GRADED TO MATCH EXISTING GROUND.

19. EXISTING BALLAST WILL BE WASTED ON SITE TO PROVIDE MATERIAL STORAGE PAD LOCATION.

20. ALL WOOD TIES REMOVED WILL BE DISPOSED IN ACCORDANCE WITH ENVIRONMENTAL REQUIREMENTS.

SUGGESTED CONSTRUCTION SEQUENCE:

1. REMOVE TRACK AND CATENARY STRUCTURES AS NECESSARY, LEAVING EXISTING TURNOUT IN PLACE FOR GCRTA ACCESS TO LOADING RAMP TO ALLOW FOR GCRTA TO LOAD AND UNLOAD MATERIALS.

2. REPLACE SANITARY SEWERS

3. EXCAVATE IN-SITU SOIL ABOVE EXISTING CULVERT AND REPLACE WITH LIGHTWEIGHT FILL. SEE DETAIL ON SHEET **46**. PLACE EMBANKMENT PER GRADING PLAN.

4. PLACE SUBBALLAST

5. PLACE BALLAST AND TRACK

6. INSTALL CATENARY POLES/WIRE. REFER TO BU-17B FOR MORE INFORMATION.

7. INSTALL BRIDGE FOUNDATIONS. SEE BU-17. SHORING DESIGNS SHALL COORDINATE WITH CONSTRUCTED EMBANKMENT AND CATENARY STRUCTURES.

ABBREVIATIONS	DESCRIPTION
°	DEGREE(S)
'	FOOT or FEET or MINUTE(S)
"	INCH or INCHES or SECOND(S)
%	PERCENT
#	POUND or NUMBER
△	CENTRAL ANGLE OF CIRCULAR CURVE
AP	ANGLE POINT
AVE	AVENUE
BC	BEGINNING OF CURVE
BLVD	BOULEVARD
BM	BENCHMARK
CB	CATCH BASIN
CC	CENTER OF CURVE
CIP	CAST IRON PIPE OR CAST IN PLACE
C/L	CENTERLINE
CLR	CLEAR
CONC	CONCRETE
CMP	CORRUGATED METAL PIPE
CP	CONTROL POINT
COMM	COMMUNICATION LINE
CORR	CORRUGATED
CS	CURVE TO SPIRAL
CT	CONCRETE TIES
CWR	CONTINUOUS WELDED RAIL
DC	DEGREE OF CURVE
DESC	DESCRIPTION
Ea	SUPERELEVATION, ACTUAL
E	EAST or EASTERLY or EASTING
EC	END OF CURVE
EF	EACH FACE
EL or ELEV	ELEVATION
EQ	EQUAL or EQUATION
EQNAHD	EQUATION AHEAD
EQNBK	EQUATION BACK
EW	EACH WAY
Eu	SUPERELEVATION, UNBALANCED
EX or EXIST	EXISTING
ESMT	EASEMENT
F	FREIGHT
FH	FIRE HYDRANT
FL	FLOWLINE
FS	FINISHED SURFACE
FT	FOOT or FEET
G	GRADE
GRD	GROUND
GV	GAS VALVE
HGL	HYDRAULIC GRADE LINE
HORIZ	HORIZONTAL
HP	HIGH POINT or HIGH PRESSURE
HWY	HIGHWAY
IJ	INSULATED JOINTS
INV	INVERT
OTM	OTHER TRACK MATERIAL

NO.	DATE	DESCRIPTION
0	2020-01-27	RFC

ISSUE RECORD

CALCULATED CDC
CHECKED WS

RECORD PLANS

TRACK GENERAL NOTES

RECORD PLANS

CUY-IR490/SR010-2.09/19.28

RECORD PLANS

BU-17A - GCRTA WYE TRACK
...\Sheets\BU-17A\96833_GN017.dgn 3/31/2020 4:42:59 PM Jonathan.Shurilla

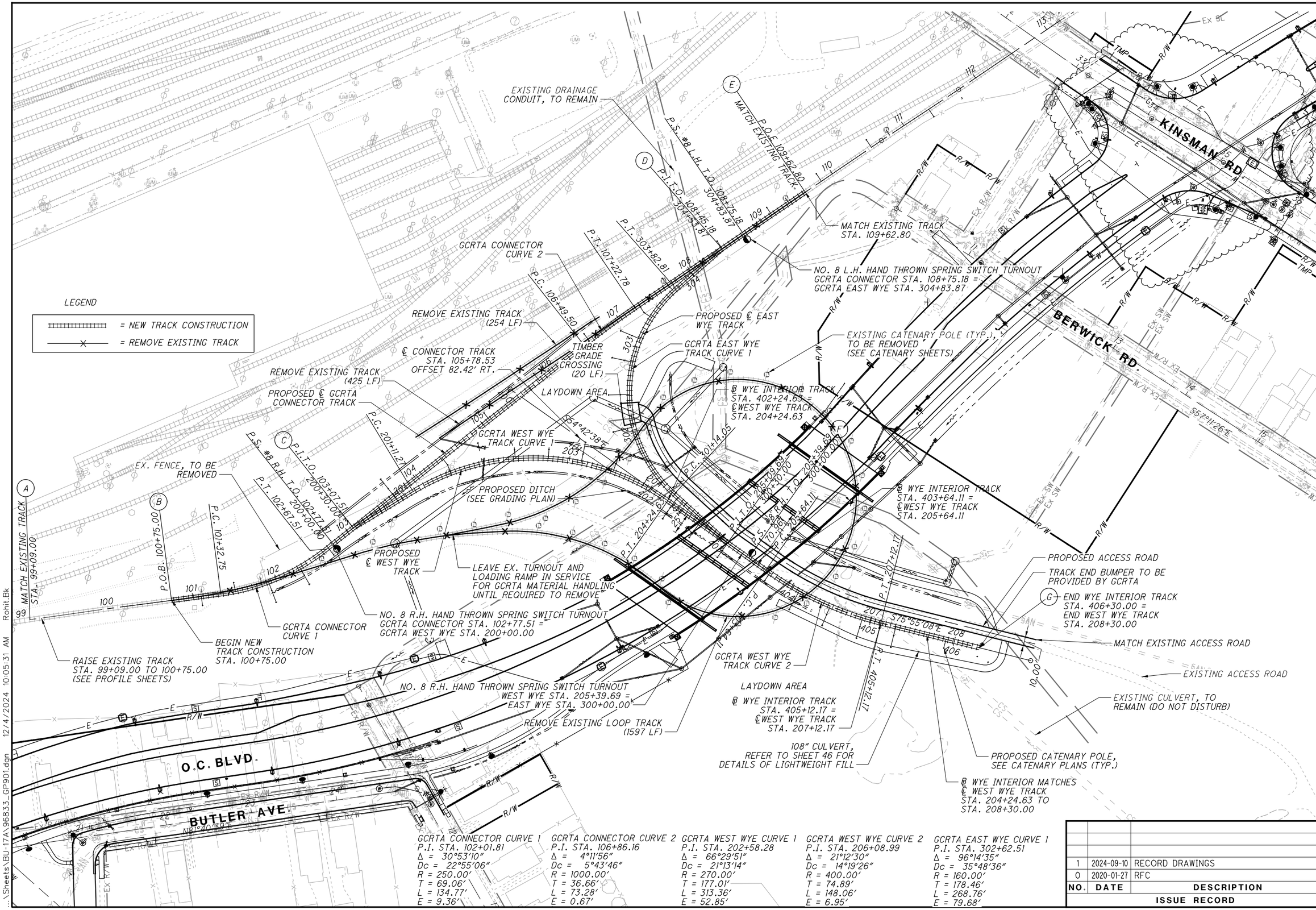

GCRTA CONNECTOR CURVE 1
P.I. STA. 102+01.81
Δ = 30°53'10"
Dc = 22°55'06"
R = 250.00'
T = 69.06'
L = 134.77'
E = 9.36'

GCRTA CONNECTOR CURVE 2
P.I. STA. 106+86.16
Δ = 4°11'56"
Dc = 5°43'46"
R = 1000.00'
T = 36.66'
L = 73.28'
E = 0.67'

GCRTA WEST WYE CURVE 1
P.I. STA. 202+58.28
Δ = 66°29'51"
Dc = 21°13'14"
R = 270.00'
T = 177.01'
L = 313.36'
E = 52.85'

GCRTA WEST WYE CURVE 2
P.I. STA. 206+08.99
Δ = 21°12'30"
Dc = 14°19'26"
R = 400.00'
T = 74.89'
L = 148.06'
E = 6.95'

GCRTA EAST WYE CURVE 1
P.I. STA. 302+62.51
Δ = 96°14'35"
Dc = 35°48'36"
R = 160.00'
T = 178.46'
L = 268.76'
E = 79.68'

NO.	DATE	DESCRIPTION
1	2024-09-10	RECORD DRAWINGS
0	2020-01-27	RFC

ISSUE RECORD

HORIZONTAL SCALE IN FEET 0 25 50 100

CALCULATED AS
CHECKED WES

RECORD PLANS

PLAN
GCRTA CONNECTOR TRACK AND WYE TRACK

RECORD PLANS

CUY-IR490/SR010-2.09/19.28

RECORD PLANS

BU-17A - GCRTA WYE TRACK
...\Sheets\BU-17A\96833_GP901.dgn 12/4/2024 10:05:31 AM Rohit.Bk

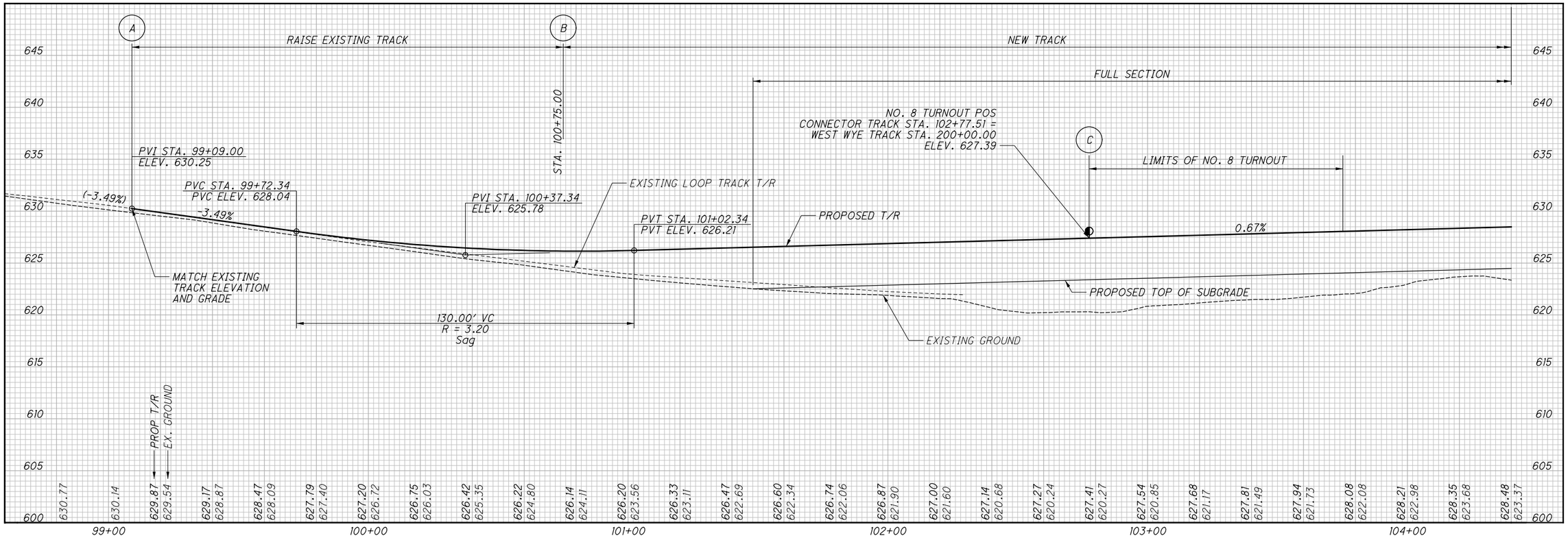

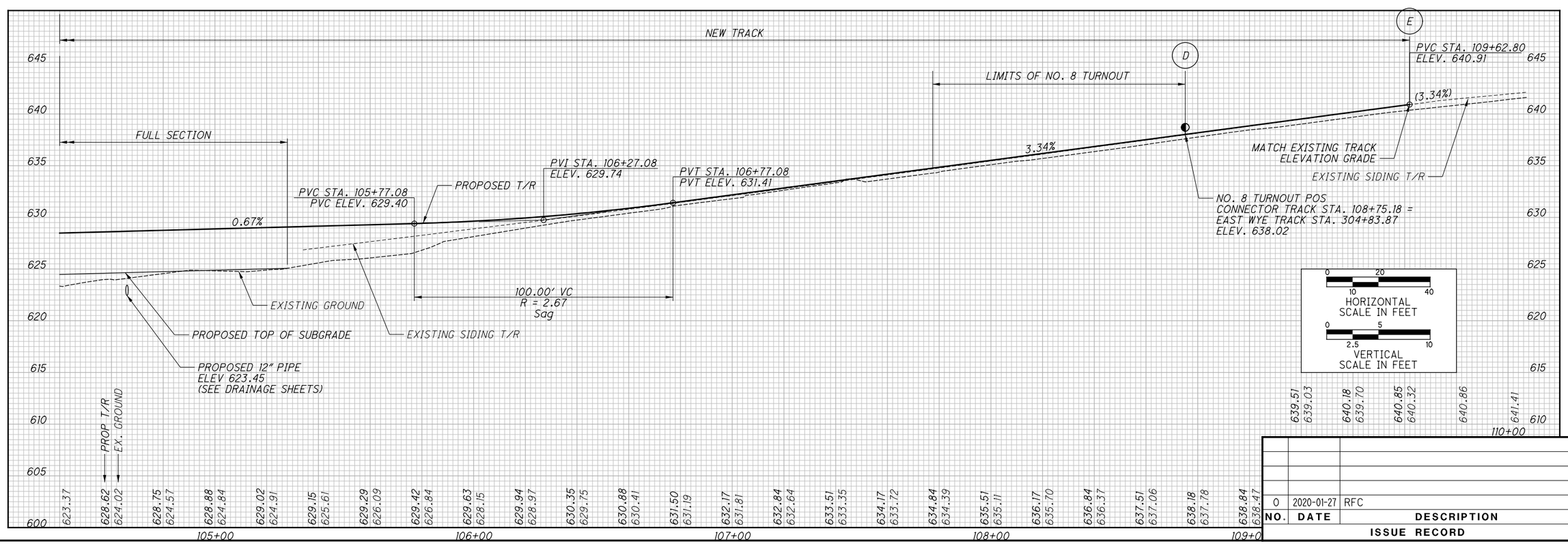

NO.	DATE	DESCRIPTION
0	2020-01-27	RFC

ISSUE RECORD

CALCULATED JW
CHECKED WES

PROFILE
GCRTA CONNECTOR TRACK

RECORD PLANS

RECORD PLANS

CUY-IR490/ SR010-
2.09/ 19.28

RECORD PLANS

BU-17A - GCRTA WYE TRACK
...\Sheets\BU-17A\96833_GF901.dgn 3/31/2020 4:44:09 PM Jonathan.Shurilla

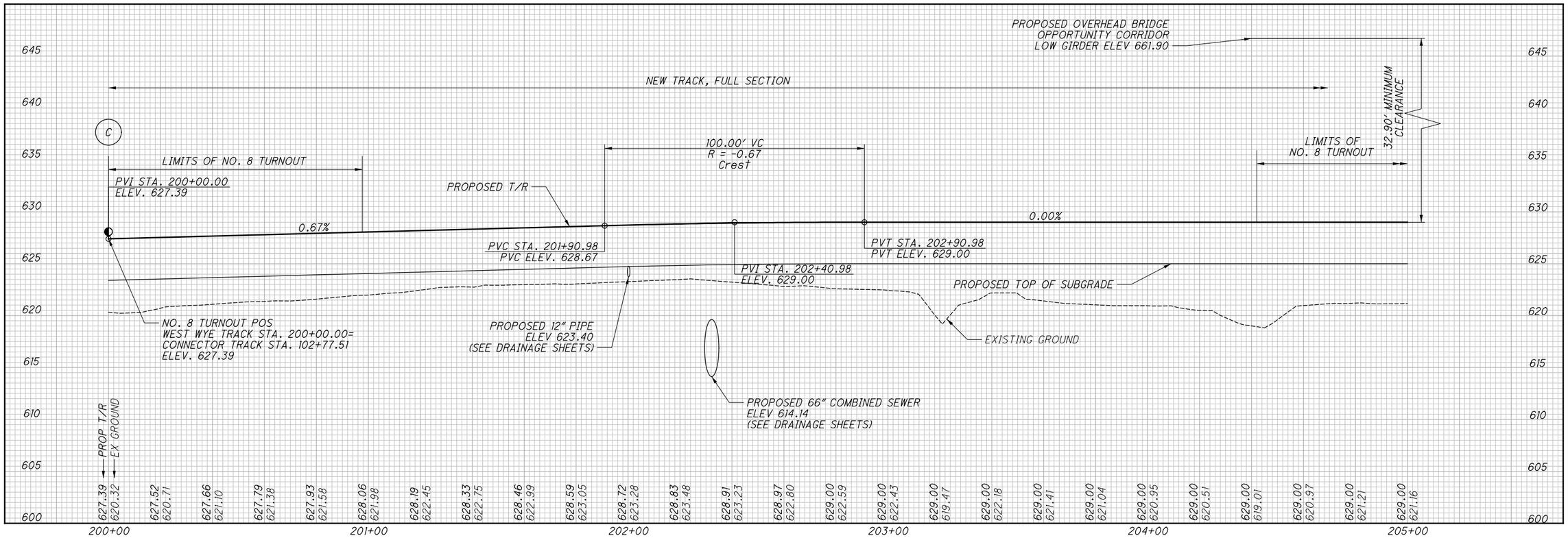

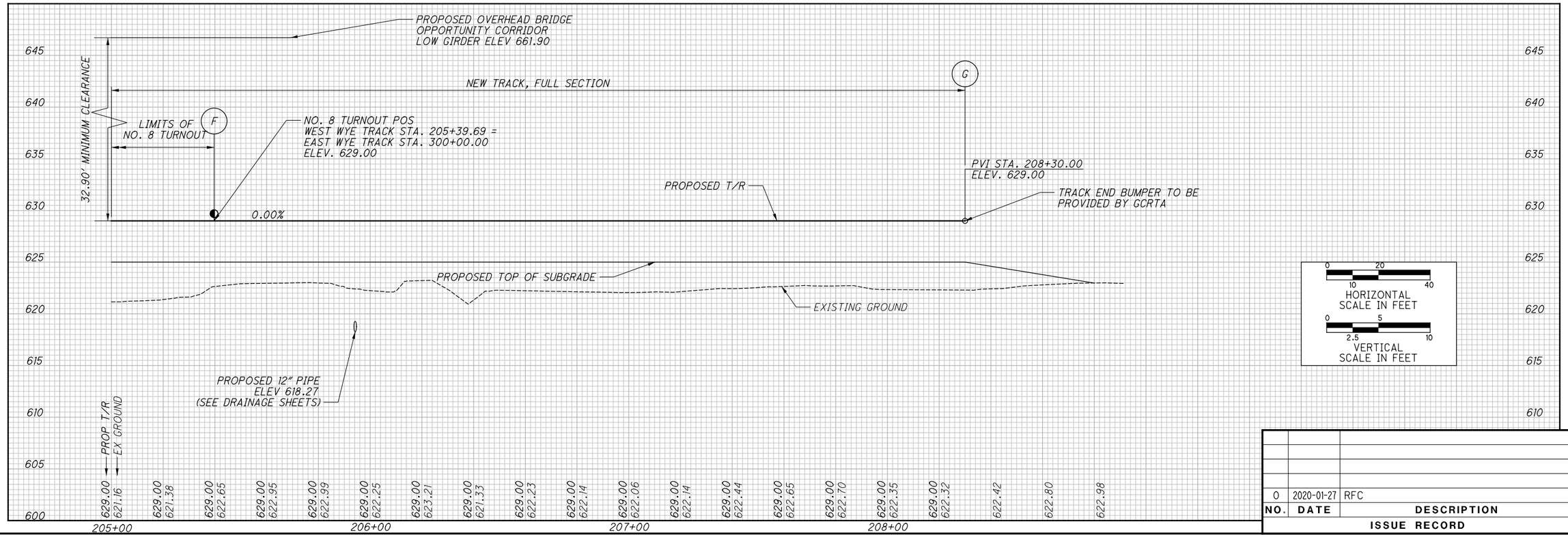

NO.	DATE	DESCRIPTION
0	2020-01-27	RFC

ISSUE RECORD

CALCULATED JW
CHECKED WES

RECORD PLANS

PROFILE
GCRTA WEST WYE TRACK

RECORD PLANS

CUY-IR490/SR010-2.09/19.28

RECORD PLANS

BU-17A - GCRTA WYE TRACK
...\Sheets\BU-17A\96833_GF902.dgn 3/31/2020 4:44:31 PM Jonathan.Shurilla

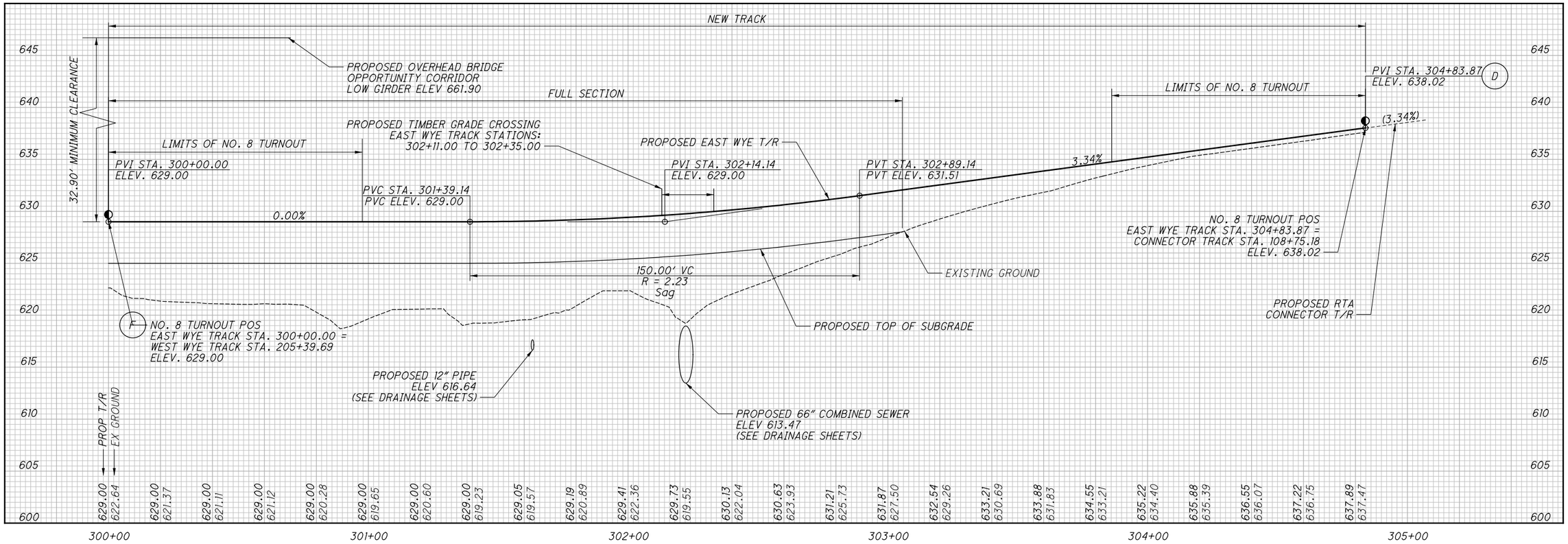

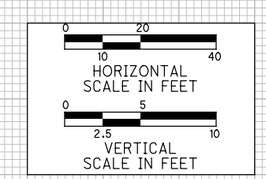

NO.	DATE	DESCRIPTION
0	2020-01-27	RFC

ISSUE RECORD

CALCULATED JW
CHECKED WES

PROFILE
GCRTA EAST WYE TRACK
RECORD PLANS

RECORD PLANS

CUY-IR490/SR010-
2.09/19.28
RECORD PLANS

BU-17A - GCRTA WYE TRACK
...\Sheets\BU-17A\96833_GF903.dgn 3/31/2020 4:44:54 PM Jonathan.Shurilla

GCRTA CONNECTOR TRACK GEOMETRY TABLE

STATIONING DATA							INPUT DATA							CURVE DATA			
CURVE OR TURNOUT NO.	DESC	BEARING	DISTANCE	STATION	NORTHING	EASTING	Dc DEGREES	Ea INCHES	Eu INCHES	V(pas) MPH	V(frt) MPH	LS FEET	I DEGREES	RADIUS FEET	Δ DEGREES	L FEET	T FEET
CURVE 1	P.I.			100+00.00	662157.544	2202004.387											
		N82°31′31″E	132.75														
	P.C.			101+32.75	662174.813	2202136.008											
	P.I.				662183.797	2202204.485	22°55′06″	0	1.6	10	0		30°53′10″	250.00	30°53′10″	134.77	69.06
	P.T.			102+67.51	662226.659	2202258.639											
		N51°38′21″E	10.00														
#8 R.H. T.O.	P.S.			102+77.51	662232.865	2202266.480							0°00′00″				
		N51°38′21″E	30.00														
	P.I.T.O.			103+07.51	662251.483	2202290.004							0°00′00″				
		N51°38′21″E	341.98														
CURVE 2	P.C.			106+49.50	662463.723	2202558.160											
	P.I.				662486.473	2202586.904	5°43′46″	0	0.4	10	0		4°11′56″	1000.00	4°11′56″	73.28	36.66
	P.T.			107+22.78	662507.057	2202617.237											
		N55°50′17″E	152.40														
#8 L.H. T.O.	P.I.T.O.			108+45.18	662575.789	2202718.517							0°00′00″				
		N55°50′17″E	30.00														
	P.S.			108+75.18	662592.635	2202743.341							0°00′00″				
		N55°50′17″E	57.62														
	P.I.			109+62.80	662641.835	2202815.840											

GCRTA WEST WYE TRACK GEOMETRY TABLE

STATIONING DATA							INPUT DATA							CURVE DATA			
CURVE OR TURNOUT NO.	DESC	BEARING	DISTANCE	STATION	NORTHING	EASTING	Dc DEGREES	Ea INCHES	Eu INCHES	V(pas) MPH	V(frt) MPH	LS FEET	I DEGREES	RADIUS FEET	Δ DEGREES	L FEET	T FEET
#8 R.H. T.O.	P.S.			200+00.00	662232.865	2202266.480											
		N51°38′21″E	30.00														
	P.I.T.O.			200+30.00	662251.483	2202290.004							7°09′10″				
		N58°47′31″E	81.27														
CURVE 1	P.C.			201+11.27	662293.591	2202359.509											
	P.I.				662385.308	2202510.905	21°13′14″	0	1.5	10	0		66°29′51″	270.00	66°29′51″	313.36	177.01
	P.T.			204+24.63	662283.048	2202655.389											
		S54°42′38″E	85.06														
#8 R.H. T.O.	P.I.T.O.			205+09.69	662233.907	2202724.822							0°00′00″				
		S54°42′38″E	30.00														
	P.S.			205+39.69	662216.575	2202749.309							0°00′00″				
		S54°42′38″E	24.42														
CURVE 2	P.C.			205+64.11	662202.469	2202769.240											
	P.I.				662159.206	2202830.366	14°19′26″	0	1.0	10	0		21°12′30″	400.00	21°12′30″	148.06	74.89
	P.T.			207+12.17	662140.987	2202903.003											
		S75°55′08″E	179.32														
	P.O.E.			208+30.00	662112.318	2203017.295											

GCRTA EAST WYE TRACK GEOMETRY TABLE

STATIONING DATA							INPUT DATA							CURVE DATA			
CURVE OR TURNOUT NO.	DESC	BEARING	DISTANCE	STATION	NORTHING	EASTING	Dc DEGREES	Ea INCHES	Eu INCHES	V(pas) MPH	V(frt) MPH	LS FEET	I DEGREES	RADIUS FEET	Δ DEGREES	L FEET	T FEET
#8 R.H. T.O.	P.S.			300+00.00	662216.573	2202749.312											
		N54°42′38″W	30.00														
	P.I.T.O.			300+30.00	662233.904	2202724.825							7°09′10″				
		N47°33′28″W	84.05														
CURVE 1	P.C.			301+14.05	662290.626	2202662.799											
	P.I.				662411.057	2202531.104	35°48′36″	0	2.5	10	0		96°14′35″	160.00	96°14′35″	268.76	178.46
	P.T.			303+82.81	662528.874	2202665.143											
		N48°41′07″E	71.06														
#8 L.H. T.O.	P.I.T.O.			304+53.87	662575.789	2202718.517							7°09′10″				
		N55°50′17″E	30.00														
	P.S.			304+83.87	662592.635	2202743.341											

NO.	DATE	DESCRIPTION
0	2020-01-27	RFC

ISSUE RECORD

CALCULATED JW
CHECKED WS

GCRTA GEOMETRY TABLES

RECORD PLANS

CUY-IR490/SR010-2.09/19.28

RECORD PLANS

BU-17A - GCRTA WYE TRACK
...\Sheets\BU-17A\96833_RT101.dgn 3/31/2020 4:45:19 PM Jonathan.Shurilla

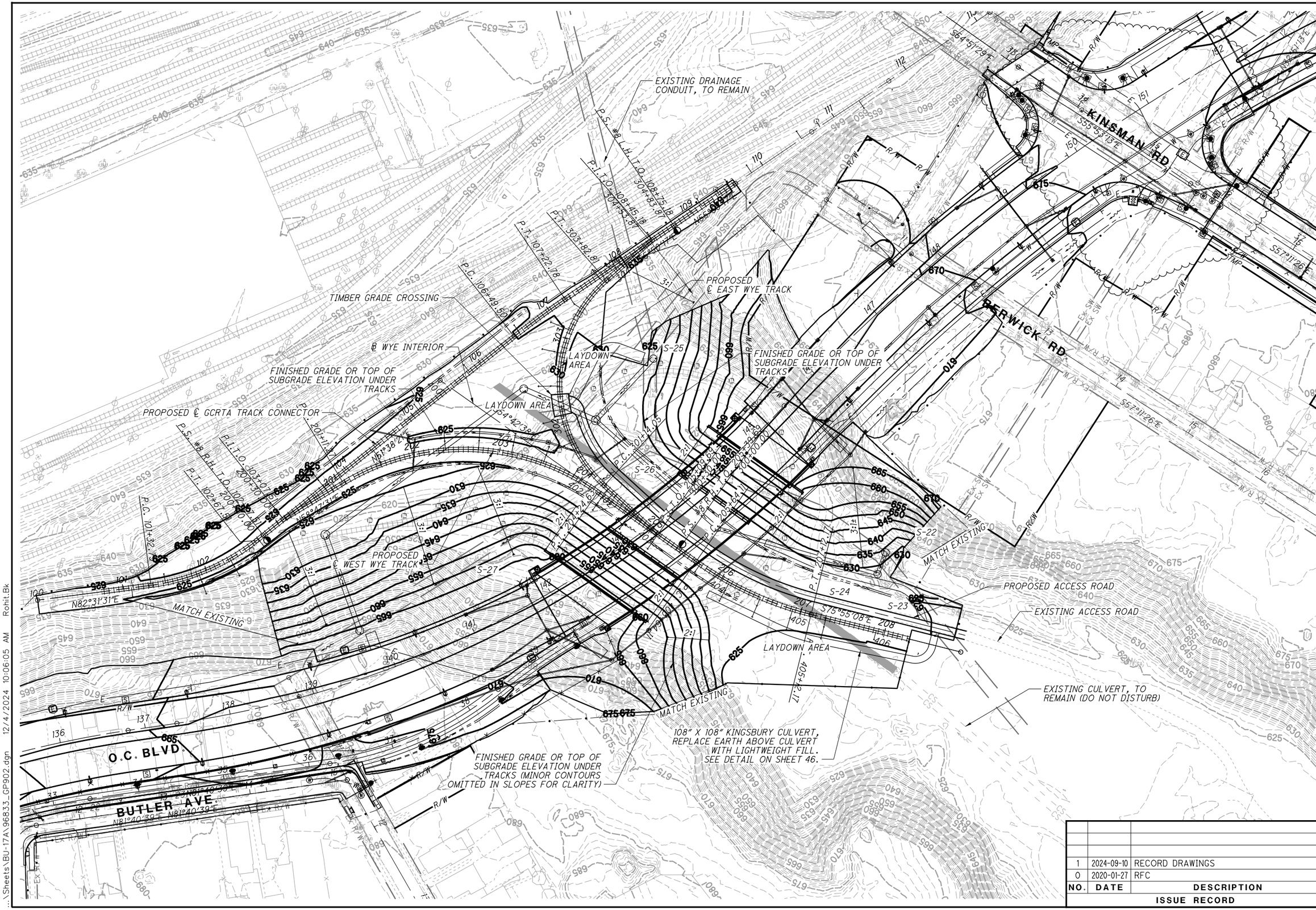

NO.	DATE	DESCRIPTION
1	2024-09-10	RECORD DRAWINGS
0	2020-01-27	RFC

ISSUE RECORD

HORIZONTAL SCALE IN FEET 0 25 50 100

CALCULATED CMC
CHECKED AS

RECORD PLANS

GRADING PLAN
KINGSBURY VALLEY

RECORD PLANS

CUY-IR490/SR010-2.09/19.28

RECORD PLANS

BU-17A - GCRTA WYE TRACK
...\Sheets\BU-17A\96833_GP902.dgn 12/4/2024 10:06:05 AM Rohit.Bk

ITEM SPECIAL - ENGINEERER FILL, CELLULAR CONCRETE

SEE SPECIAL PROVISIONS

PLACE CELLULAR CONCRETE OVER THE EXISTING 108" CULVERT AS SHOWN IN THE TYPICAL SECTION (SHOWN BELOW) AND THE PROFILE SHEET ON 48/106.

ITEM SPECIAL - ENGINEERED FILL, LIGHTWEIGHT AGGREGATE FILL

THIS WORK CONSISTS OF FURNISHING AND PLACING LIGHTWEIGHT AGGREGATE FILL USING EXPANDED SHALE, CLAY OR SLATE (ESCS) OR A MIXTURE OF ESCS AND SOIL. FURNISH ESCS PRODUCED BY THE ROTARY KILN PROCESS AND CONFORMING TO ASTM C 330. FURNISH ESCS CONFORMING TO THE FOLLOWING:

1. SOUNDNESS LOSS: THE MAXIMUM SOUNDNESS LOSS SHALL BE LESS THAN 30% WHEN TESTED, WITH FOUR CYCLES OF MAGNESIUM SULFATE, ACCORDING TO AASHTO T 104.

2. ABRASION RESISTANCE: THE MAXIMUM ABRASION LOSS SHALL BE LESS THAN 40% WHEN TESTED ACCORDING TO ASTM C 131.

3. CHLORIDE CONTENT: THE MAXIMUM CHLORIDE CONTENT SHALL BE LESS THAN 100 PPM WHEN TESTED ACCORDING TO AASHTO T 291.

4. GRADING: AGGREGATE GRADING SHALL BE 3/4-INCH TO NO. 4 ACCORDING TO ASTM C 136.

5. PH: AGGREGATE PH SHALL RANGE FROM 5 TO 10 WHEN TESTED ACCORDING TO AASHTO T 289.

FURNISH ESCS WITH A MAXIMUM AGGREGATE LOOSE BULK DENSITY OF 52 LBS/CUBIC FOOT OR LESS, WHEN TESTED DRY AND ACCORDING TO AASHTO T 19.

FURNISH A LIGHTWEIGHT AGGREGATE FILL CONSISTING OF ESCS OR A MIXTURE OF ESCS AND SOIL THAT HAS A MAXIMUM IN-PLACE COMPACTED MOIST DENSITY OF 70 LBS/CUBIC FT WHEN TESTED USING A MODIFIED STANDARD PROCTOR TEST (AASHTO T 99). MODIFY THE STANDARD PROCTOR TEST BY PREPARING THE SAMPLE AT THE MOISTURE CONTENT AT WHICH THE MATERIAL WILL BE PLACED IN THE FIELD.

PLACE LIGHTWEIGHT AGGREGATE FILL IN HORIZONTAL LOOSE LIFTS NOT EXCEEDING 12 INCHES IN THICKNESS. COMPACT LIGHTWEIGHT AGGREGATE FILL TO 98 PERCENT OF THE MAXIMUM DRY DENSITY DETERMINED BY THE TEST SECTION METHOD SPECIFIED IN SUPPLEMENT 1015. IF PLACING LIGHTWEIGHT AGGREGATE FILL IN CONFINED AREAS, USE A VIBRATORY PLATE COMPACTOR. IF USING A VIBRATORY PLATE COMPACTOR WITH A CENTRIFUGAL FORCE OF LESS THAN 2 TONS, PLACE THE LIGHTWEIGHT AGGREGATE IN 6-INCH HORIZONTAL LOOSE LIFTS.

PLACE LIGHTWEIGHT AGGREGATE FILL OVER THE EXISTING 108" CULVERT WHERE THE CONTRACTOR MUST EXCAVATE THE CELLULAR CONCRETE FOR THE PROPOSED PIPE CROSSINGS AT APPROXIMATE STA. 11+46 AND STA. 13+47. SEE SHEET 48/106 FOR DETAILS.

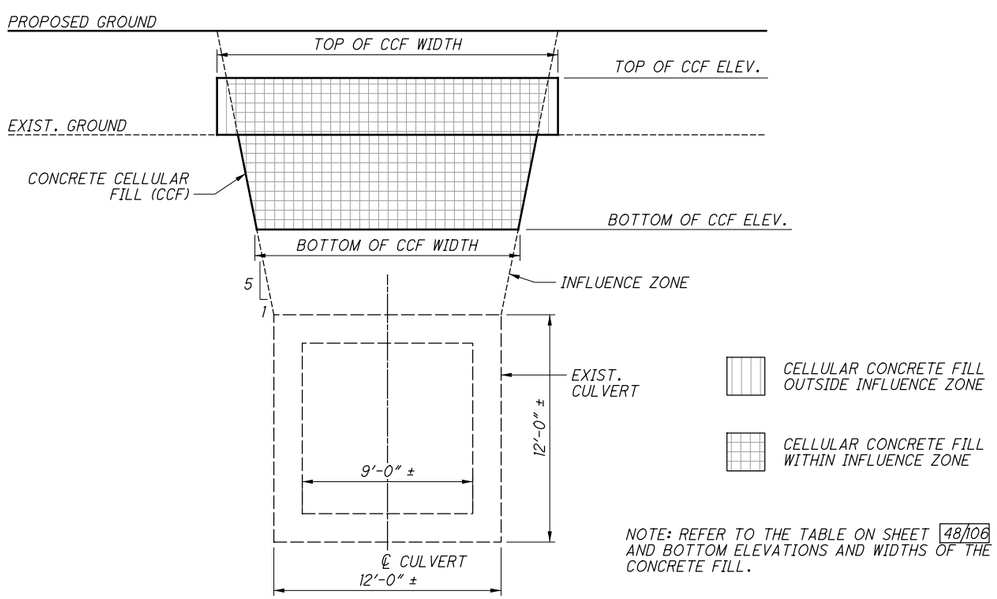

LIGHTWEIGHT FILL DETAIL - 108" SEWER

NOTE: REFER TO THE TABLE ON SHEET 48/106 FOR THE TOP AND BOTTOM ELEVATIONS AND WIDTHS OF THE CELLULAR CONCRETE FILL.

STAGED EMBANKMENT CONSTRUCTION

TO ENSURE STABILITY OF THE EMBANKMENT DURING CONSTRUCTION, THE EMBANKMENT WILL BE CONSTRUCTED IN STAGES WITH WAITING PERIODS IN BETWEEN STAGES TO ALLOW THE IN-PLACE FOUNDATION SOIL TO CONSOLIDATE AND GAIN STRENGTH. GEOTECHNICAL INSTRUMENTATION CONSISTING OF VIBRATING WIRE PIEZOMETERS, SETTLEMENT CELLS, AND INCLINOMETERS WILL BE MONITORED DURING EMBANKMENT FILL PLACEMENT AND WAITING PERIODS. THE GEOTECHNICAL ENGINEER WILL USE THE DATA OBTAINED FROM THE GEOTECHNICAL INSTRUMENTATION TO ADJUST THE RATE OF EMBANKMENT FILL PLACEMENT AND WAITING PERIODS.

FOLLOW THE GENERAL CONSTRUCTION SEQUENCE PROVIDED BELOW.

1. PERFORM CLEARING AND GRUBBING AND REMOVE EXISTING PAVEMENT AND STRUCTURES.

2. INSTALL GEOTECHNICAL INSTRUMENTATION AS SHOWN.

3. CONSTRUCT FIRST STAGE OF EMBANKMENT UP TO THE ELEVATION SHOWN. PLACE GEOGRID ACCORDING TO SUPPLEMENTAL SPECIFICATION 863 AND IN LOCATIONS AND ELEVATIONS PRESENTED IN THE TABLE.

4. MONITOR INSTRUMENTATION DURING EMBANKMENT PLACEMENT.

5. AFTER PLACING THE FIRST STAGE OF EMBANKMENT TO ELEVATION SHOWN, STOP EMBANKMENT FILL PLACEMENT AND WAIT FOR THE IN-PLACE FOUNDATION SOIL TO CONSOLIDATE AND PORE WATER PRESSURES TO DISSIPATE. THE GEOTECHNICAL ENGINEER WILL ADJUST THE LENGTH OF THE WAITING PERIOD BASED ON THE GEOTECHNICAL INSTRUMENTATION READINGS.

6. AFTER COMPLETION OF THE WAITING PERIOD AS DETERMINED BY THE GEOTECHNICAL ENGINEER, RESUME EMBANKMENT FILL PLACEMENT. CONSTRUCT SUBSEQUENT STAGES WITH WAITING PERIODS IN BETWEEN STAGES AS DIRECTED BY THE GEOTECHNICAL ENGINEER.

7. AFTER COMPLETION OF THE FINAL WAITING PERIOD, CONSTRUCTION OF THE BRIDGE FOUNDATIONS AND INSTALLATION OF SEWERS WITHIN THE NEW EMBANKMENT MAY BEGIN.

ANTICIPATED TOTAL SETTLEMENT IS 26 INCHES.

STAGED EMBANKMENT CONSTRUCTION SEQUENCE

	TOP OF FILL ELEVATION	MAXIMUM RATE OF FILL PLACEMENT	ANTICIPATED WAITING PERIOD
STAGE 1	BOTTOM OF ABUT. FOOTING 645.0 FT REAR 652.5 FT FWD	2 FT/DAY	45 DAYS
STAGE 2	FINAL PROPOSED GRADE (APPROX. 668 FT)	2 FT/DAY	35 DAYS

ITEM SPECIAL - VIBRATING WIRE PIEZOMETER

THIS WORK CONSISTS OF FURNISHING, INSTALLING, AND READING VIBRATING WIRE PIEZOMETERS (VPW) TO MONITOR POREWATER PRESSURE IN THE SOIL. INSTALL VIBRATING WIRE PIEZOMETERS AT THE LOCATIONS AND ELEVATIONS SHOWN. THE CONTRACTOR MAY ADJUST THE LOCATION AND ELEVATION OF THE PIEZOMETERS WITH THE APPROVAL OF THE GEOTECHNICAL ENGINEER.

FURNISH INSTRUMENTATION FROM ONE OF THE MANUFACTURERS LISTED BELOW:

GEOKON, INC., WWW.GEOKON.COM
- MODEL 4500 VW PIEZOMETER

DURHAM GEO SLOPE INDICATOR, DURHAMGEO.COM
- MODEL 52611020 STANDARD VW PIEZOMETER

INSTALLATION
INSTALL THE VIBRATING WIRE PIEZOMETERS AT LEAST 14 DAYS BEFORE BEGINNING EMBANKMENT CONSTRUCTION. THE GEOTECHNICAL ENGINEER MAY EXTEND OR REDUCE THE 14-DAY PERIOD BASED ON THE RESULTS OF THE INITIAL PORE PRESSURE MEASUREMENTS.

INSTALL THE VIBRATING WIRE PIEZOMETERS ACCORDING TO THE MANUFACTURER'S RECOMMENDATIONS. THE PIEZOMETER CAN BE INSTALLED BY THE SAND METHOD, DIRECT GROUTING, OR DIRECT PUSHING AS RECOMMENDED BY THE MANUFACTURER. MEASURE AND REPORT THE DEPTH TO WHICH THE PIEZOMETER IS INSTALLED AND THE GROUND SURFACE ELEVATION.

RUN THE SIGNAL CABLE FROM THE VIBRATING WIRE PIEZOMETER TO THE TERMINAL BOX OR DATA LOGGER IN A TRENCH APPROXIMATELY ONE FOOT DEEP. PLACE AND COMPACT A FEW INCHES OF MOIST FINE SAND ALONG THE BOTTOM OF THE TRENCH. LAY MULTIPLE SIGNAL CABLES SIDE BY SIDE WITHOUT TOUCHING OR CROSSING EACH OTHER. IF CABLES MUST CROSS, PLACE A LAYER OF FINE SAND BETWEEN THE CABLES. KEEP SOME SLACK IN THE CABLE. DO NOT STRETCH THE CABLE TIGHT. HAND COMPACT FOUR INCHES OF MOIST, FINE SAND OVER THE CABLE. BACKFILL AND HAND COMPACT THE REST OF THE TRENCH WITH ITEM 203 EMBANKMENT MATERIAL.

READINGS
OBTAIN INITIAL READINGS USING A PORTABLE READOUT BOX AND THE DATALOGGER. COMPARE THE READINGS FROM THE READOUT BOX AND DATA LOGGER AND RESOLVE ANY DISCREPANCIES. CONVERT READINGS TO UNITS OF PRESSURE AND FEET OF WATER, ACCORDING TO THE INSTRUCTIONS GIVEN IN THE MANUAL.

SET THE DATALOGGER TO RECORD READINGS EVERY SIX HOURS. COLLECT READINGS FROM THE DATALOGGER AND REPORT THE READINGS ONCE PER WEEK. THE GEOTECHNICAL ENGINEER MAY ADJUST THE COLLECTION AND REPORTING INTERVAL IF PREVIOUSLY COLLECTED READINGS INDICATE THE NEED FOR MORE FREQUENT DATA COLLECTION.

SURVEY AND RECORD THE FILL ELEVATION ABOVE THE VIBRATING WIRE PIEZOMETER AT LEAST ONCE PER DAY WHEN ACTIVELY PLACING EMBANKMENT AND AT LEAST ONCE PER WEEK WHEN NOT PLACING EMBANKMENT. REPORT THE FILL HEIGHT AND PORE PRESSURE READINGS IN A GRAPH WITH FILL HEIGHT AND PORE PRESSURE (ON THE Y-AXIS) VERSUS TIME (ON THE X-AXIS).

NO.	DATE	DESCRIPTION
1	2024-09-10	RECORD DRAWINGS
0	2020-01-27	RFC

ISSUE RECORD

CALCULATED PAN
CHECKED LJS

GEOTECHNICAL NOTES (1 OF 2)

RECORD PLANS

CUY-IR490/SR010-2.09/19.28

BU-17A - GCRTA WYE TRACK
...\Geotech\Sheets\96833_GN400.dgn 12/4/2024 10:06:11 AM Rohit.Bk

ITEM SPECIAL - SETTLEMENT CELL

THIS WORK CONSISTS OF FURNISHING, INSTALLING, MAINTAINING AND PROTECTING SETTLEMENT CELLS AND OBTAINING SETTLEMENT READINGS. INSTALL SETTLEMENT CELLS AT THE LOCATIONS SHOWN. THE CONTRACTOR MAY ADJUST THE LOCATION OF THE SETTLEMENT CELLS WITH THE APPROVAL OF THE GEOTECHNICAL ENGINEER.

FURNISH INSTRUMENTATION CONSISTING OF A SETTLEMENT PLATE, A VENTED VIBRATING WIRE PRESSURE TRANSDUCER, VENTED SIGNAL CABLE, TUBING, A DESICCANT CHAMBER, A RESERVOIR, A TERMINAL BOX AND A PORTABLE READOUT BOX. FURNISH INSTRUMENTATION FROM ONE OF THE MANUFACTURERS LISTED BELOW:

GEOKON, INC., WWW.GEOKON.COM
- MODEL 4660 VW SETTLEMENT SYSTEM

DURHAM GEO SLOPE INDICATOR, DURHAMGEO.COM
- MODEL 52612420 VENTED VW SETTLEMENT CELL

INSTALLATION
INSTALL THE INSTRUMENTATION ACCORDING TO THE GENERAL INSTALLATION INSTRUCTIONS THAT FOLLOW. CHECK THE MANUAL FROM THE MANUFACTURER FOR OTHER POSSIBLE STEPS THAT MAY BE NECESSARY AS WELL. IF MULTIPLE SETTLEMENT CELLS ARE REQUIRED, CHECK WITH THE MANUFACTURER FOR OTHER PIECES OF EQUIPMENT OR EQUIPMENT CONFIGURATIONS THAT ARE AVAILABLE TO SIMPLIFY THE COLLECTION OF THE DATA AND REDUCE THE NUMBER OF ABOVE GROUND INSTALLATIONS.

1. INSTALL THE SETTLEMENT CELL
ATTACH THE TRANSDUCER TO THE SETTLEMENT PLATE. EXCAVATE A HOLE APPROXIMATELY ONE-FOOT DEEP AND PLACE A FEW INCHES OF MOIST, FINE SAND IN THE BOTTOM. HAND COMPACT, SMOOTH AND LEVEL THE SAND AND PLACE THE SETTLEMENT PLATE ON TOP. MEASURE THE ELEVATION OF THE SETTLEMENT PLATE USING SURVEY EQUIPMENT. COVER THE SETTLEMENT PLATE AND CELL WITH HAND-COMPACTED, MOIST, FINE SAND UP TO GROUND LEVEL. CHECK THAT THE SETTLEMENT CELL IS FUNCTIONING PROPERLY.

2. INSTALL THE TUBING AND CABLE
RUN THE TUBING AND SIGNAL CABLE FROM THE SETTLEMENT CELL TO THE TERMINAL BOX IN A TRENCH APPROXIMATELY ONE FOOT DEEP. PLACE AND COMPACT A FEW INCHES OF MOIST FINE SAND ALONG THE BOTTOM OF THE TRENCH. LAY THE SIGNAL CABLE AND TUBES SIDE BY SIDE WITHOUT TOUCHING OR CROSSING EACH OTHER. IF CABLES MUST CROSS, PLACE A LAYER OF FINE SAND BETWEEN THE CABLES. KEEP SOME SLACK IN THE CABLE AND TUBING. DO NOT STRETCH THE CABLE OR TUBING TIGHT. CHECK THE TUBES FOR SIGNS OF AIR BUBBLES. AT NO POINT SHOULD THE TUBING BE HIGHER THAN THE RESERVOIR LOCATION. HAND COMPACT FOUR INCHES OF MOIST, FINE SAND OVER THE CABLE AND TUBES. BACKFILL AND HAND COMPACT THE REST OF THE TRENCH WITH ITEM 203 EMBANKMENT MATERIAL.

3. INSTALL THE RESERVOIR
MOUNT THE RESERVOIR IN A PROTECTIVE ENCLOSURE ATTACHED TO A WALL OR A STAKE SO THAT THE RESERVOIR IS HIGHER THAN THE TRENCH HOUSING THE SETTLEMENT PLATE, VENTED VW PRESSURE TRANSDUCER, CABLE AND TUBING. LOCATE THE RESERVOIR AWAY FROM THE ZONE OF INFLUENCE OF THE EMBANKMENT. POSITION THE RESERVOIR SO THAT IT IS NOT EXPOSED TO DIRECT SUNLIGHT. IF USING A STAKE, INSTALL IT FOUR FEET DEEP, PLUMB AND CONCRETED FIRMLY INTO THE GROUND. USE METAL OR RIGID PLASTIC CONDUIT TO PROTECT THE CABLE AND TUBING. THE CONDUIT SHOULD START IN THE TRENCH NEAR THE END, BEND UPWARDS AND EXTEND UP THE STAKE OR WALL ALMOST ALL THE WAY TO THE PROTECTIVE ENCLOSURE. CONNECT THE RESERVOIR AND TUBING ACCORDING TO THE MANUFACTURER'S DIRECTIONS. BE CAREFUL NOT TO ALLOW ANY AIR TO BE TRAPPED INSIDE THE TUBING. CONNECT THE VENT TUBE AND SIGNAL CABLE ACCORDING TO THE MANUFACTURER'S DIRECTIONS. MEASURE THE ELEVATION OF THE TOP OF THE RESERVOIR USING SURVEY EQUIPMENT.

READINGS
OBTAIN INITIAL READINGS. THESE ARE IMPORTANT BASELINE READINGS AND THEY SHOULD NOT BE TAKEN WHEN THE RESERVOIR, CONDUIT OR TUBES ARE EXPOSED TO DIRECT SUNLIGHT. TAKE READINGS ACCORDING TO THE INSTRUCTIONS GIVEN IN THE PORTABLE READOUT BOX MANUAL. A DATA LOGGER CAN ALSO BE USED INSTEAD OF THE PORTABLE READOUT BOX.

TAKE SETTLEMENT READINGS WEEKLY DURING FILL PLACEMENT AND DURING ANY SPECIFIED WAITING PERIOD. CONVERT READINGS TO INCHES OR FEET OF SETTLEMENT COMPARED TO THE INITIAL READINGS, ACCORDING TO THE INSTRUCTIONS GIVEN IN THE MANUAL. PLOT THE READINGS ON A GRAPH WITH SETTLEMENT (ON THE NEGATIVE Y-AXIS) AND FILL HEIGHT (ON THE POSITIVE Y-AXIS) VERSUS TIME (ON THE X-AXIS). SUBMIT A COPY OF THE SETTLEMENT GRAPH TO THE GEOTECHNICAL ENGINEER ONCE PER WEEK, OR AS DIRECTED BY THE GEOTECHNICAL ENGINEER.

PROTECTIVE MEASURES
PROTECT THE RESERVOIR IN A WATERPROOF, LOCKABLE PROTECTIVE ENCLOSURE SOME DISTANCE AWAY FROM THE CONSTRUCTION AREA. IN THIS WAY, THE GROUND WILL BE STABLE AND THE RESERVOIR WILL REMAIN AT THE SAME ELEVATION TO PROVIDE A RELIABLE REFERENCE. ALSO, THE RESERVOIR SHOULD BE LOCATED SO THAT IT WILL BE OUT OF THE WAY OF CONSTRUCTION EQUIPMENT AND THEREFORE SAFE FROM BEING RUN OVER.

SEE SHEET 47A FOR RECORD POST-CONSTRUCTION SETTLEMENT INFORMATION.

ITEM SPECIAL - INCLINOMETER

THIS WORK CONSISTS OF FURNISHING, INSTALLING, AND READING INCLINOMETERS TO MONITOR LATERAL GROUND MOVEMENT. INSTALL INCLINOMETER CASING AT THE LOCATIONS AND DEPTHS SHOWN. THE CONTRACTOR MAY ADJUST THE LOCATION OF THE INCLINOMETER WITH THE APPROVAL OF THE GEOTECHNICAL ENGINEER.

USE AN INCLINOMETER PROBE AND FURNISH INCLINOMETER CASING FROM ONE OF THE MANUFACTURERS LISTED BELOW:

GEOKON, INC., WWW.GEOKON.COM
DURHAM GEO SLOPE INDICATOR, DURHAMGEO.COM

FURNISH 2.75-INCH OUTSIDE DIAMETER CASING WITH SNAP LOCK "QUICK CONNECTIONS". FURNISH A PERMANENTLY FIXED BOTTOM CAP WITH A WATERTIGHT CONNECTION DESIGNED TO SEAL THE BOTTOM OF THE CASING PIPE. FURNISH A REMOVABLE TOP CAP THAT FITS SNUGLY ON THE TOP OF THE CASING PIPE.

INSTALLATION
DRILL A BORING TO THE REQUIRED DEPTH AND OF SUFFICIENT DIAMETER TO INSTALL THE INCLINOMETER CASING AND GROUT IT IN PLACE. BEFORE INSTALLING THE CASING, PLACE BENTONITE/CEMENT GROUT THROUGH A TREMIE PIPE PLACED TO THE BOTTOM OF THE BORING UNTIL APPROXIMATELY THE LOWER HALF OF THE BORING IS FILLED. MIX THE BENTONITE/CEMENT GROUT AS SHOWN BELOW. MIX THE WATER AND CEMENT TOGETHER FIRST TO MAINTAIN THE WATER-CEMENT RATIO BEFORE ADDING THE BENTONITE. ADJUST THE BENTONITE MIX RATIO UNTIL THE GROUT HAS A HEAVY CREAM CONSISTENCY.

GROUT FOR HARD SOILS AND ROCK (SPT > 4 BLOWS PER FOOT)
RATIO OF WATER:CEMENT:BENTONITE BY WEIGHT = 2.5:1:0.3
WATER = 30 GALLONS
PORTLAND CEMENT (TYPE I) = 94 LBS (1 BAG)
BENTONITE = APPROX. 25 LBS
COMPRESSIVE STRENGTH SHOULD BE APPROXIMATELY 100 PSI AFTER 28 DAYS. SIMILAR STRENGTH TO HARD CLAY.

ASSEMBLE THE FULL LENGTH OF THE BOTTOM CAP AND THE INCLINOMETER CASING AT THE GROUND SURFACE OR AS IT IS LOWERED INTO THE BORING. INSERT THE INCLINOMETER CASING INTO THE BORING, THROUGH THE HOLLOW STEM AUGERS, AND REST THE BOTTOM CAP DIRECTLY ON THE BOTTOM OF THE BORING DISPLACING THE INITIAL GROUT PLACEMENT. IF THE INCLINOMETER CASING CANNOT BE INSERTED THE ENTIRE DEPTH OF THE BORING DUE TO AN OBSTRUCTION, REMOVE THE CASING, REAM OUT THE BORING, REPLACE THE GROUT AND RE-INSTALL THE CASING. DO NOT FORCE THE INCLINOMETER CASING INTO THE BORING BY USING DOWN PRESSURE FROM THE DRILL RIG OR OTHER MEANS. TO COUNTERACT THE BUOYANT FORCES FROM THE WATER AND GROUT WITHIN THE BORING, FILL THE CASING WITH CLEAN, POTABLE WATER OR PLACE A WEIGHTED ROD INSIDE THE ENTIRE LENGTH OF THE CASING. PLACE THE TOP CAP ON THE TOP END OF THE CASING PRIOR TO THE PLACEMENT OF ANY ADDITIONAL MATERIAL.

PLACE ONE OF THE TWO SETS OF OPPOSING GROOVES WITHIN THE CASING IN-LINE WITH THE ASSUMED DIRECTION OF MOVEMENT IF THE ORIENTATION OF THE GROOVES IS NOT PERFECTLY ALIGNED UPON COMPLETION OF THE PLACEMENT OF THE CASING, DO NOT ATTEMPT TO ROTATE THE CASING TO RE-ALIGN. THIS COULD RESULT IN SPIRALING OF THE CASING.

FILL THE REMAINING ANNULUS OUTSIDE OF THE INCLINOMETER CASING, PLACING GROUT THROUGH A TREMIE PIPE INSERTED APPROXIMATELY TWO FEET INTO THE EXISTING GROUT. AS THE GROUT IS ADDED TO THE BORING, ANY WATER LOCATED WITHIN THE BORING WILL BE DISPLACED TO THE GROUND SURFACE. CONTINUE GROUT PLACEMENT UNTIL THE CONSISTENCY OF THE RETURN GROUT MATERIAL IS SIMILAR TO THE ORIGINAL GROUT. BEGIN REMOVING THE HOLLOW STEM AUGERS GRADUALLY AFTER THE TOP OF THE GROUT REACHES THE GROUND SURFACE AND THE RETURN MATERIAL HAS THE PROPER CONSISTENCY, ENSURING THAT THE TOP OF THE GROUT MATERIAL DOES NOT DROP BELOW THE BOTTOM OF THE HOLLOW STEM AUGERS. PLACE ADDITIONAL GROUT AS NEEDED UNTIL ALL THE AUGERS ARE REMOVED.

CONFIRM THE TOP OF GROUT SURFACE 24 HOURS AFTER PLACEMENT TO ENSURE THE GROUT HAS NOT SHRUNK OR DROPPED. IF THE TOP OF GROUT SURFACE HAS DROPPED TO A LEVEL MORE THAN 36 INCHES BELOW THE GROUND SURFACE, THEN PLACE ADDITIONAL GROUT.

INSTALLATION REPORT
RECORD FIELD MEASUREMENTS ON AN INSTALLATION REPORT REPRESENTING THE ACTUAL CONSTRUCTION OF THE INCLINOMETER. REPORT MEASUREMENTS TO THE NEAREST 0.1 FEET, REFERENCED TO THE GROUND SURFACE. USE A REPORT FORM SIMILAR TO THE ONE SHOWN IN APPENDIX D OF THE ODOT SPECIFICATIONS FOR GEOTECHNICAL EXPLORATIONS. AT A MINIMUM, INCLUDE THE FOLLOWING INFORMATION ON THE INSTALLATION REPORT:

INCLINOMETER IDENTIFICATION NUMBER
DATE OF INSTALLATION
SITE NAME (COUNTY/ROUTE/SECTION)
PID NUMBER
LOCATION: LAT., LONG., STATION., OFFSET DISTANCE AND DIRECTION
INSPECTORS NAME
GROUND SURFACE ELEVATION
TOP OF CASING HEIGHT/ELEVATION
TOP OF GROUT DEPTH/ELEVATION
BOTTOM OF BORING DEPTH/ELEVATION
TYPE OF CASING MATERIAL
TYPE OF GROUT

READINGS
OBTAIN BASELINE READINGS THREE DAYS AFTER INSTALLING THE INCLINOMETER. TAKE INCLINOMETER READINGS AS RECOMMENDED BY THE INCLINOMETER PROBE MANUFACTURER.

TAKE INCLINOMETER READINGS WEEKLY WHEN ACTIVELY PLACING EMBANKMENT AND MONTHLY AT OTHER TIMES DURING CONSTRUCTION. GENERATE AND SUBMIT CUMULATIVE AND INCREMENTAL DISPLACEMENT GRAPHS FOR EACH INCLINOMETER, USING THE BASELINE READINGS AS A BASIS FOR COMPARISON. SUBMIT A COPY OF THE GRAPHS TO THE GEOTECHNICAL ENGINEER EVERY TIME AN INCLINOMETER READING IS TAKEN.

APPLICABLE ODOT CM&S SPECIFICATIONS

THE FOLLOWING WORK ITEMS SHALL BE CONSTRUCTED PER THE CM&S ITEMS LISTED BELOW.

ITEM NO.	ITEM DESCRIPTION
201	CLEARING AND GRUBBING
203	EXCAVATION
203	EMBANKMENT
863	GEOGRID, TYPE P5
863	REINFORCED EMBANKMENT

NO.	DATE	DESCRIPTION
1	2024-09-10	RECORD DRAWINGS
0	2020-01-27	RFC

ISSUE RECORD

CALCULATED PAN
CHECKED LJS

RECORD PLANS

GEOTECHNICAL NOTES (2 OF 2)

RECORD PLANS

CUY-IR490/SR010-2.09/19.28

RECORD PLANS

BU-17A - GCRTA WYE TRACK
...\Geotech\Sheets\96833_GN401.dgn 12/4/2024 4:49:05 PM Gregory.Hertler

REAR ABUTMENT		
DATE	LEFT PIN ELEV.	RIGHT PIN ELEV.
3/15/2021	655.76	655.84
5/12/2021	655.75	655.8
5/14/2021	655.73	655.77
5/17/2021	655.71	655.77
5/19/2021	655.71	655.77
5/25/2021	655.71	655.77
6/2/2021	655.71	655.75
6/7/2021	655.71	655.75
6/15/2021	655.71	655.75
6/22/2021	655.71	655.73
6/29/2021	655.71	655.73
7/7/2021	655.71	655.73
7/13/2021	655.71	655.73
7/21/2021	655.71	655.73
7/26/2021	655.71	655.73
8/4/2021	655.71	655.73
8/6/2021	655.69	655.71
8/7/2021	655.68	655.7
8/8/2021	655.67	655.69
8/9/2021	655.67	655.69
8/10/2021	655.67	655.69
8/11/2021	655.67	655.69
8/12/2021	655.67	655.69
8/13/2021	655.67	655.69
8/14/2021	655.67	655.69
8/15/2021	655.67	655.69
8/16/2021	655.67	655.69
8/17/2021	655.67	655.69
8/18/2021	655.67	655.69
8/19/2021	655.67	655.69
8/20/2021	655.67	655.69
10/4/2021	655.67	655.68
10/11/2021	655.67	655.67
10/21/2021	655.67	655.67
3/25/2022	655.65	655.59
6/3/2022	655.62	655.59
8/19/2022	655.62	655.59
9/16/2022	655.62	655.59
1/27/2023	655.62	655.59
4/12/2023	655.61	655.57
7/5/2023	655.61	655.57
9/13/2023	655.61	655.57
12/20/2023	655.61	655.57

PIER 1		
DATE	LEFT PIN ELEV.	RIGHT PIN ELEV.
XX/XX/2021	625.06	625.11
5/14/2021	625.06	625.11
6/7/2021	625.06	625.1
6/22/2021	625.06	625.1
6/29/2021	625.06	625.1
7/7/2021	625.06	625.1
7/13/2021	625.06	625.1
7/21/2021	625.06	625.1
7/26/2021	625.06	625.1
8/4/2021	625.06	625.1
8/6/2021	625.05	625.09
8/7/2021	625.04	625.08
8/8/2021	625.04	625.08
8/9/2021	625.04	625.08
8/10/2021	625.04	625.08
8/11/2021	625.04	625.08
8/12/2021	625.04	625.08
8/13/2021	625.04	625.08
8/14/2021	625.04	625.08
8/15/2021	625.04	625.08
8/16/2021	625.04	625.08
8/17/2021	625.04	625.07
8/18/2021	625.04	625.07
8/19/2021	625.04	625.07
8/20/2021	625.04	625.07
10/4/2021	625.00	625.05
10/11/2021	625.00	625.05
10/21/2021	625.00	625.05
3/25/2022	624.99	625.04
6/3/2022	624.99	625.02
8/19/2022	624.97	625.02
9/16/2022	624.97	625.01
1/27/2023	624.97	625.01
4/12/2023	624.96	625.00
7/5/2023	624.96	625.00
9/13/2023	624.96	625.00
12/20/2023	624.96	625.00

PIER 2		
DATE	LEFT PIN ELEV.	RIGHT PIN ELEV.
XX/XX/2021	625.25	625.16
5/14/2021	625.25	625.16
6/7/2021	625.24	625.16
6/22/2021	625.24	625.16
6/29/2021	625.24	625.16
7/7/2021	625.24	625.16
7/13/2021	625.24	625.15
7/21/2021	625.24	625.15
7/26/2021	625.24	625.15
8/4/2021	625.24	625.15
8/6/2021	625.23	625.14
8/7/2021	625.22	625.14
8/8/2021	625.21	625.14
8/9/2021	625.21	625.14
8/10/2021	625.21	625.14
8/11/2021	625.21	625.14
8/12/2021	625.21	625.14
8/13/2021	625.21	625.14
8/14/2021	625.21	625.14
8/15/2021	625.21	625.14
8/16/2021	625.21	625.14
8/17/2021	625.21	625.13
8/18/2021	625.21	625.13
8/19/2021	625.21	625.13
8/20/2021	625.21	625.13
10/4/2021	625.2	625.13
10/11/2021	625.2	625.13
10/21/2021	625.2	625.13
3/25/2022	625.2	625.12
6/3/2022	625.19	625.09
8/19/2022	625.18	625.09
9/16/2022	625.17	625.09
1/27/2023	625.17	625.09
4/12/2023	625.16	625.08
7/5/2023	625.16	625.08
9/13/2023	625.16	625.08
12/20/2023	625.16	625.08

FORWARD ABUTMENT		
DATE	LEFT PIN ELEV.	RIGHT PIN ELEV.
3/1/2021	654.88	654.88
5/12/2021	654.77	654.81
5/14/2021	654.73	654.79
5/17/2021	654.73	654.77
5/18/2021	654.74	654.77
5/19/2021	654.74	654.77
5/25/2021	654.74	654.77
6/2/2021	654.74	654.77
6/7/2021	654.74	654.77
6/15/2021	654.74	654.77
6/22/2021	654.74	654.77
6/29/2021	654.74	654.77
7/7/2021	654.74	654.77
7/13/2021	654.74	654.77
7/21/2021	654.74	654.77
7/26/2021	654.74	654.77
8/4/2021	654.74	654.77
8/6/2021	654.73	654.76
8/7/2021	654.71	654.76
8/8/2021	654.7	654.76
8/9/2021	654.70	654.76
8/10/2021	654.70	654.76
8/11/2021	654.70	654.76
8/12/2021	654.70	654.76
8/13/2021	654.70	654.75
8/14/2021	654.70	654.75
8/15/2021	654.70	654.75
8/16/2021	654.70	654.75
8/17/2021	654.70	654.75
8/18/2021	654.70	654.75
8/19/2021	654.70	654.75
8/20/2021	654.70	654.75
10/4/2021	654.66	654.72
10/11/2021	654.66	654.72
10/21/2021	654.66	654.72
3/25/2022	654.6	654.68
6/3/2022	654.59	654.65
8/19/2022	654.59	654.65
9/16/2022	654.59	654.65
1/27/2023	654.59	654.65
4/12/2023	654.57	654.63
7/5/2023	654.57	654.63
9/13/2023	654.57	654.63
12/20/2023	654.57	654.63

NO.	DATE	DESCRIPTION
0	2024-09-10	RECORD DRAWINGS

ISSUE RECORD

CALCULATED XXX
CHECKED XXX

POST-CONSTRUCTION SETTLEMENT INFORMATION

RECORD PLANS

CUY-IR490/SR010-2.09/19.28

RECORD PLANS

47A
106

BU-17A - GCRTA WYE TRACK
...\Geotech\Sheets\96833_GN402.dgn 12/4/2024 10:06:20 AM Rohit.Bk

LIMITS OF CELLULAR CONCRETE FILL (CCF)						
SECTION	BEGIN STA.	END STA.	BOTTOM OF CCF ELEV.	BOTTOM WIDTH OF CCF (FT)	TOP OF CCF ELEVATION	TOP WIDTH OF CCF (FT)
A	10+00	10+45	620.0	16	623.5	17.5
B	10+45	10+94	616.0	14.5	623.5	17.5
C	10+94	11+28	613.9	13.5	623.5	17.5
D	11+28	12+01	617.0	14.5	623.5	17.5
E	12+01	13+15	618.0	15	623.5	17
F	13+15	13+52	619.0	15	623.5	17
G	13+52	13+90	619.0	15	623.5	17
H	13+90	14+39	616.5	15	623.5	17
I	14+39	14+86	616.5	14	623.5	16.5
J	14+86	15+02	619.0	15	623.5	16.5
K	15+02	15+39	621.0	15.5	622.5	16

NOTE: THERE ARE PROPOSED PIPE CROSSINGS AT APPROXIMATE STA. 11+46 AND STA. 13+47. AFTER THESE STORM SEWERS ARE INSTALLED, THE TRENCH IS TO BE BACKFILLED WITH LIGHTWEIGHT AGGREGATE FILL TO THE LIMITS SHOWN BELOW.

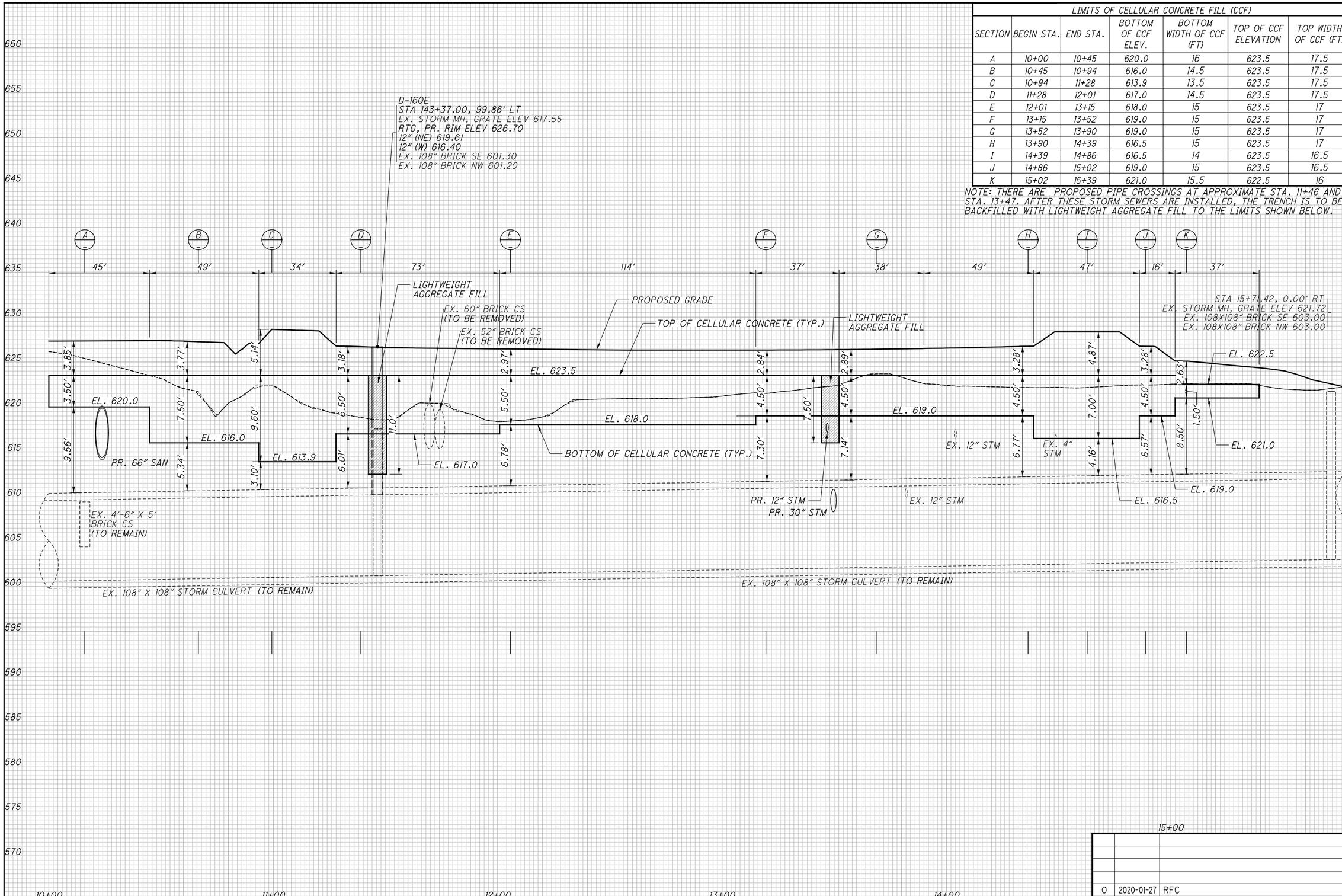

NO.	DATE	DESCRIPTION
0	2020-01-27	RFC

ISSUE RECORD

CALCULATED PAN
CHECKED LJS

PROFILE
LIGHTWEIGHT FILL ABOVE EX. 108" STORM CULVERT

RECORD PLANS

CUY-IR490/SR010-2.09/19.28

RECORD PLANS

BU-17A - GCRTA WYE TRACK
...\Geotech\Sheets\96833_GM403.dgn 3/31/2020 4:47:10 PM Jonathan.Shurilla

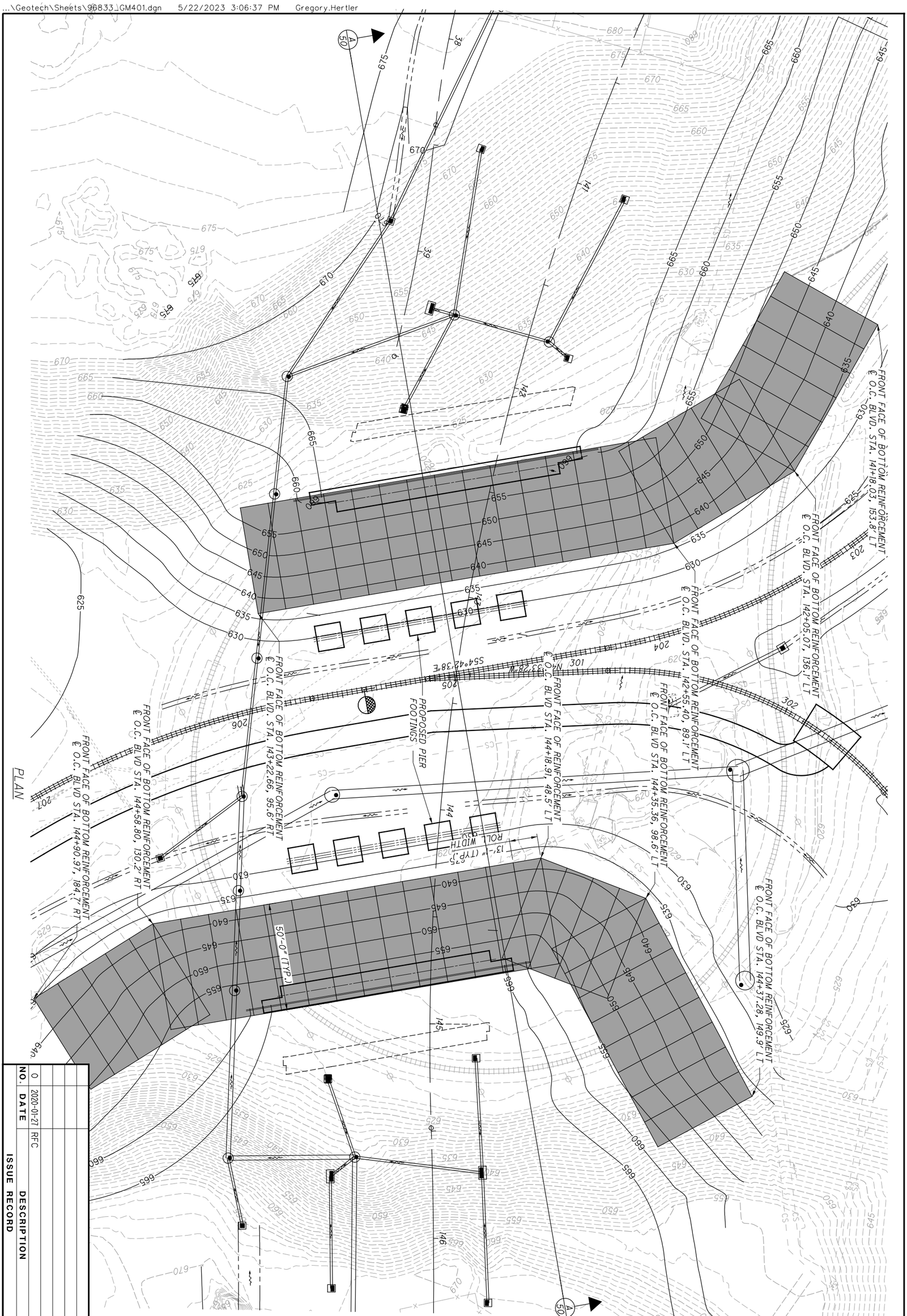

NO.	DATE	DESCRIPTION
0	2020-01-27	RFC

ISSUE RECORD

49 / 106

CUY-IR490/SR010-2.09/19.28

RECORD PLANS

GEOGRID REINFORCEMENT PLAN
KINGSBURY RUN RAVINE

RECORD PLANS

CALCULATED LJS
CHECKED PAN

0 10 20 40
HORIZONTAL SCALE IN FEET

RECORD PLANS

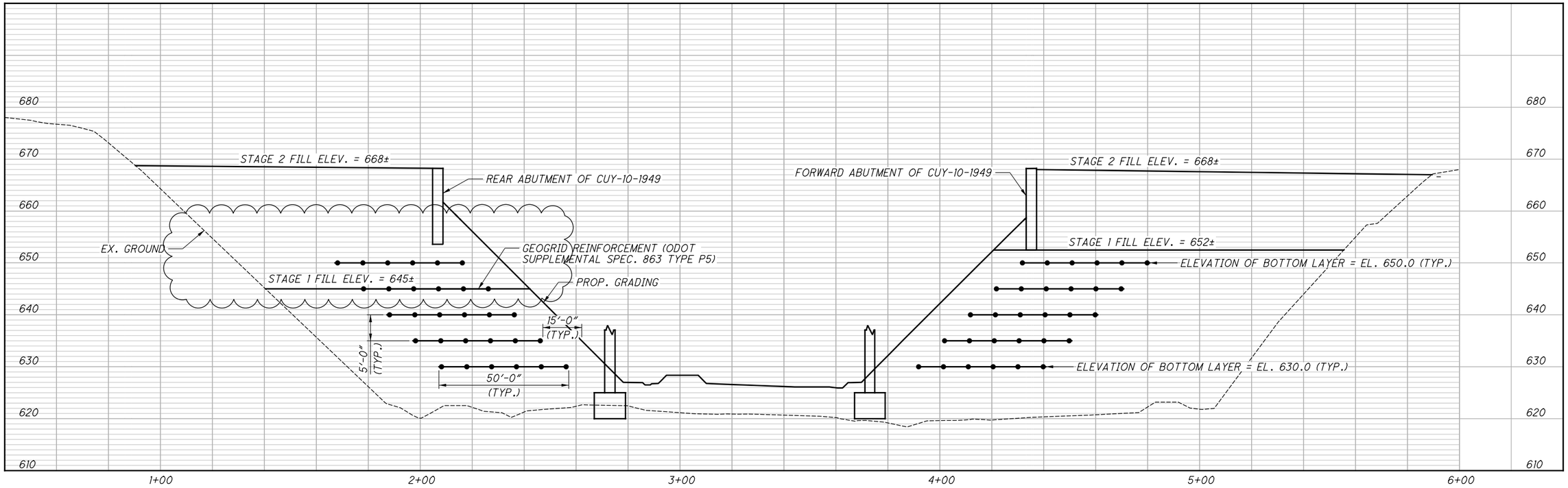

A/49 SECTION

NOTES

1. SEE SHEET 46 FOR STAGED EMBANKMENT CONSTRUCTION SEQUENCE.
2. PLACE AND COMPACT EMBANKMENT MATERIAL AROUND GEOGRID ACCORDING TO SUPPLEMENTAL SPECIFICATION 863.

NO.	DATE	DESCRIPTION
1	2024-09-10	RECORD DRAWINGS
0	2020-01-27	RFC

ISSUE RECORD

CALCULATED LJS
CHECKED PAN

GEOGRID REINFORCEMENT SECTION
KINGSBURY RUN RAVINE
RECORD PLANS

CUY-IR490/SR010-2.09/19.28
RECORD PLANS

BU-17A - GCRTA WYE TRACK
...\Geotech\Sheets\96833_GM402.dgn 12/4/2024 10:06:44 AM Rohit.Bk

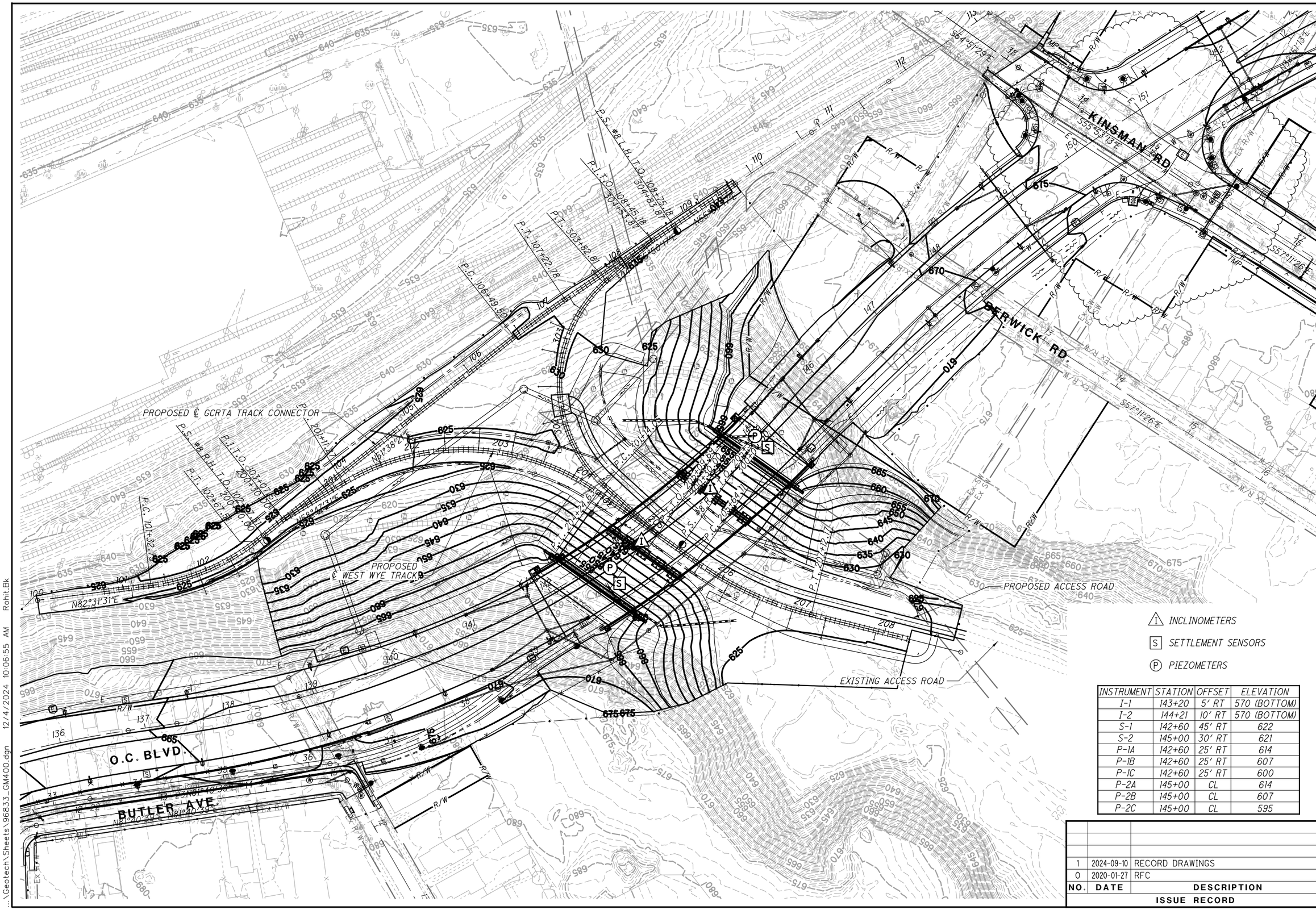

INSTRUMENT	STATION	OFFSET	ELEVATION
I-1	143+20	5' RT	570 (BOTTOM)
I-2	144+21	10' RT	570 (BOTTOM)
S-1	142+60	45' RT	622
S-2	145+00	30' RT	621
P-1A	142+60	25' RT	614
P-1B	142+60	25' RT	607
P-1C	142+60	25' RT	600
P-2A	145+00	CL	614
P-2B	145+00	CL	607
P-2C	145+00	CL	595

NO.	DATE	DESCRIPTION
1	2024-09-10	RECORD DRAWINGS
0	2020-01-27	RFC

ISSUE RECORD

CALCULATED SM
CHECKED PAN

GEOTECHNICAL INSTRUMENTATION PLAN
KINGSBURY VALLEY

RECORD PLANS

CUY-IR490/SR010-2.09/19.28

RECORD PLANS

BU-17A - GCRTA WYE TRACK
...\Geotech\Sheets\96833_GM400.dgn 12/4/2024 10:06:55 AM Rohit.Bk

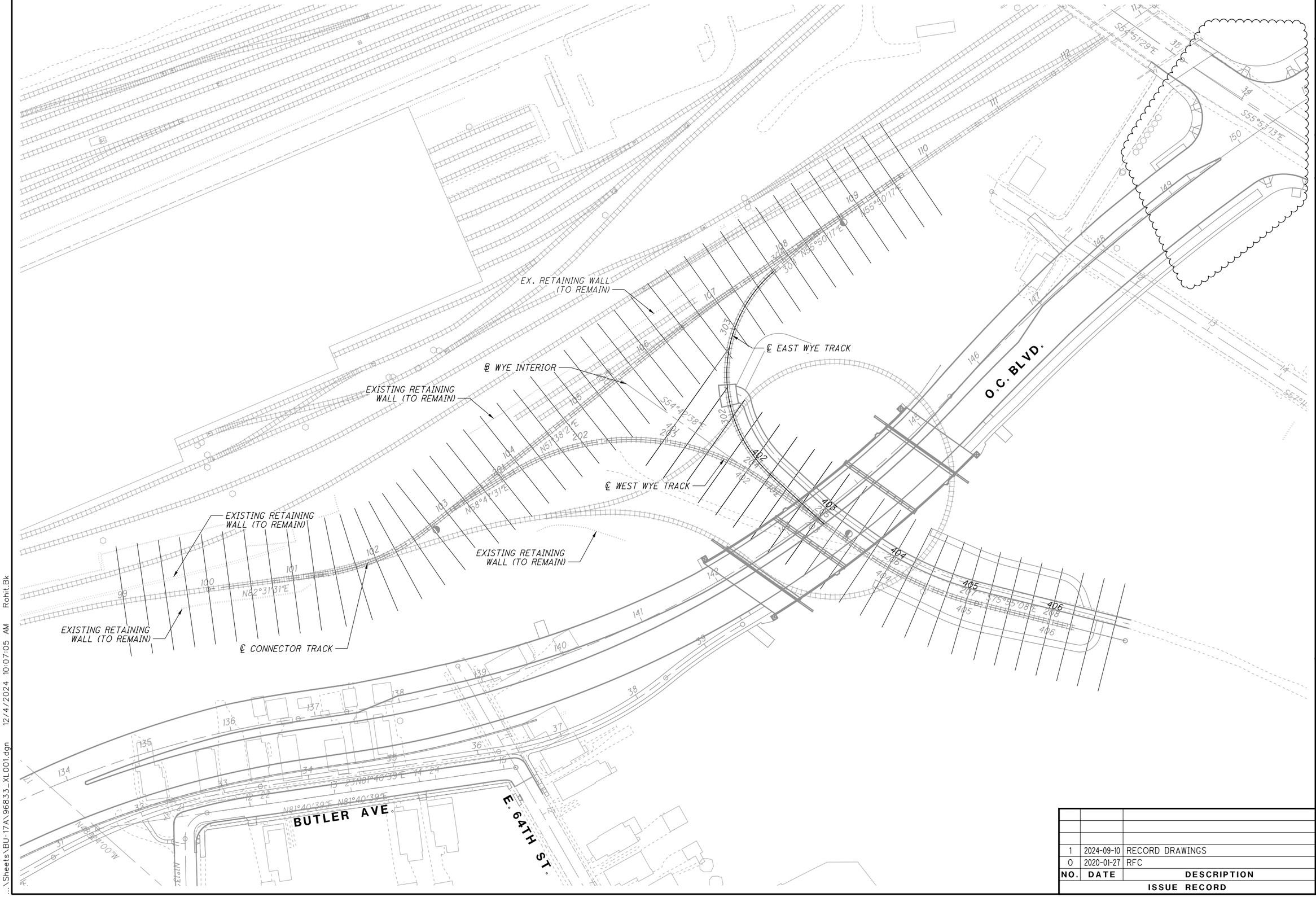

NO.	DATE	DESCRIPTION
1	2024-09-10	RECORD DRAWINGS
0	2020-01-27	RFC

ISSUE RECORD

HORIZONTAL SCALE IN FEET 0 25 50 100

CALCULATED JTH
CHECKED JW

RECORD PLANS

CROSS SECTION LAYOUT PLAN
KINGSBURY VALLEY

RECORD PLANS

CUY-IR490/SR010-2.09/19.28

RECORD PLANS

BU-17A - GCRTA WYE TRACK
...\Sheets\BU-17A\96833_XL001.dgn 12/4/2024 10:07:05 AM Rohit.Bk

SEEDING	
END WIDTH	SQ. YDS.

END AREA		VOLUME	
CUT	FILL	CUT	FILL

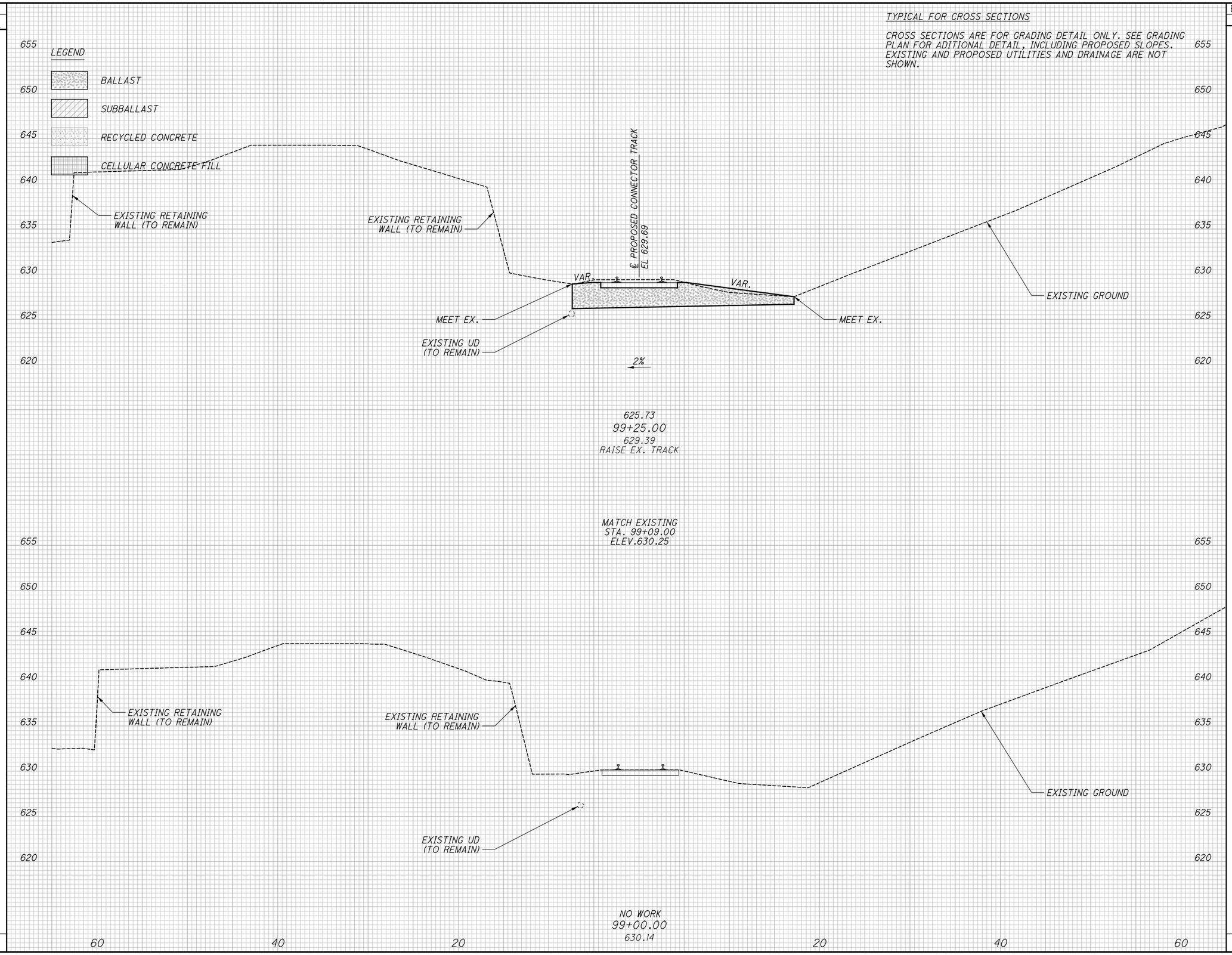

NO.	DATE	DESCRIPTION
0	2020-01-27	RFC ISSUE RECORD

CALCULATED CMC
CHECKED JW

CROSS SECTIONS - CONNECTOR TRACK
STA. 99+00.00 TO STA. 99+25.00

RECORD PLANS

CUY-IR490/SR010-2.09/19.28

RECORD PLANS

BU-17A - GCRTA WYE TRACK
...\Sheets\BU-17A\96833_XS017.dgn 3/31/2020 4:49:55 PM Jonathan.Shurilla

SEEDING	
END WIDTH	SQ. YDS.

END AREA		VOLUME	
CUT	FILL	CUT	FILL

TYPICAL FOR CROSS SECTIONS

CROSS SECTIONS ARE FOR GRADING DETAIL ONLY. SEE GRADING PLAN FOR ADITIONAL DETAIL, INCLUDING PROPOSED SLOPES. EXISTING AND PROPOSED UTILITIES AND DRAINAGE ARE NOT SHOWN.

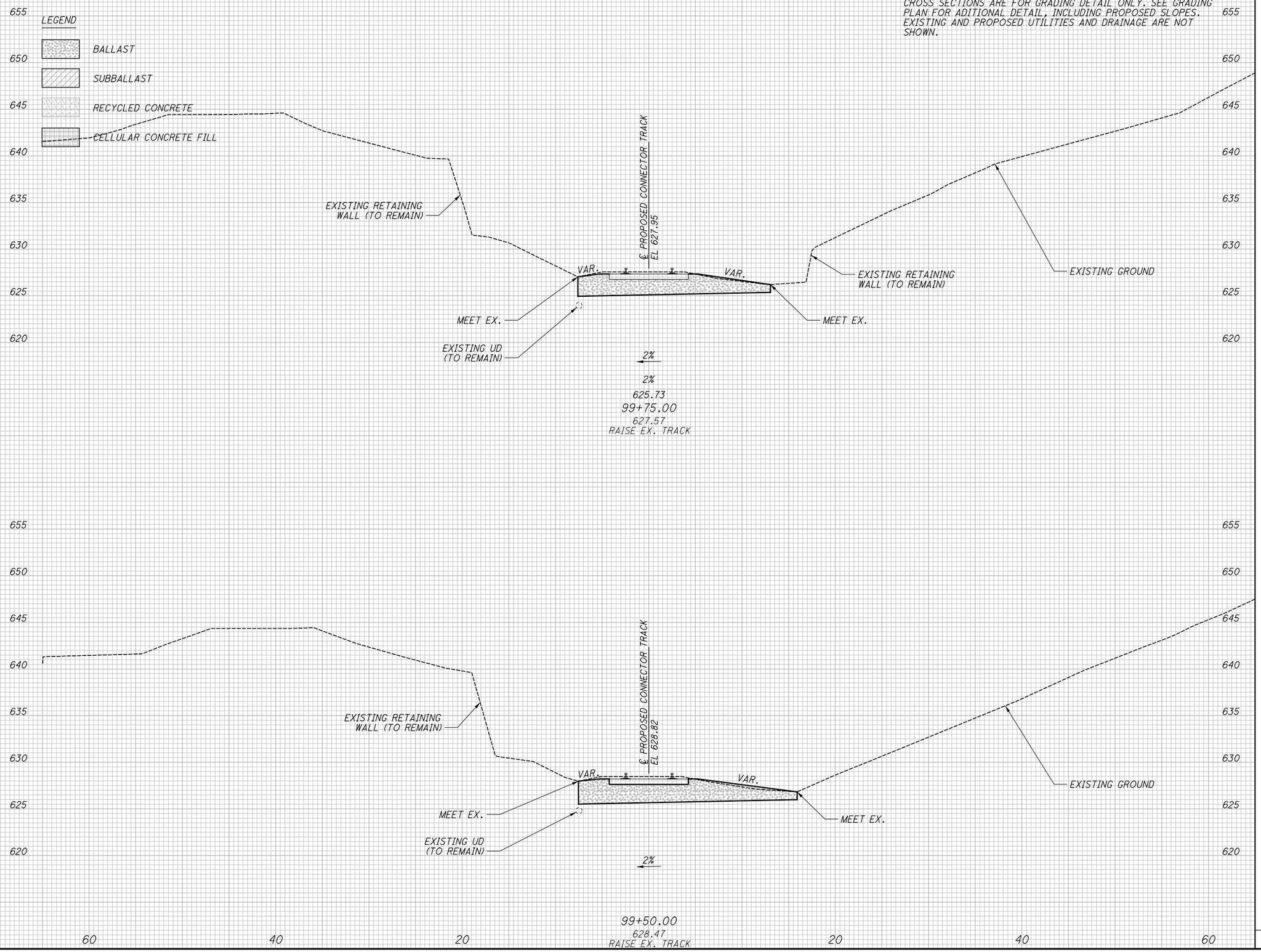

NO.	DATE	DESCRIPTION
0	2020-01-27	RFC ISSUE RECORD

CALCULATED CMC
CHECKED JW

CROSS SECTIONS - CONNECTOR TRACK
STA. 99+50.00 TO STA. 99+75.00

RECORD PLANS

CUY-IR490/SR010-2.09/19.28

RECORD PLANS

BU-17A - GCRTA WYE TRACK
...\Sheets\BU-17A\96833_XS017.dgn 3/31/2020 4:49:56 PM Jonathan.Shurilla

SEEDING	
END WIDTH	SQ. YDS.

END AREA		VOLUME	
CUT	FILL	CUT	FILL

CALCULATED CMC
CHECKED JW

TYPICAL FOR CROSS SECTIONS

CROSS SECTIONS ARE FOR GRADING DETAIL ONLY. SEE GRADING PLAN FOR ADITIONAL DETAIL, INCLUDING PROPOSED SLOPES. EXISTING AND PROPOSED UTILITIES AND DRAINAGE ARE NOT SHOWN.

LEGEND

- *BALLAST*
- *SUBBALLAST*
- *RECYCLED CONCRETE*
- *CELLULAR CONCRETE FILL*

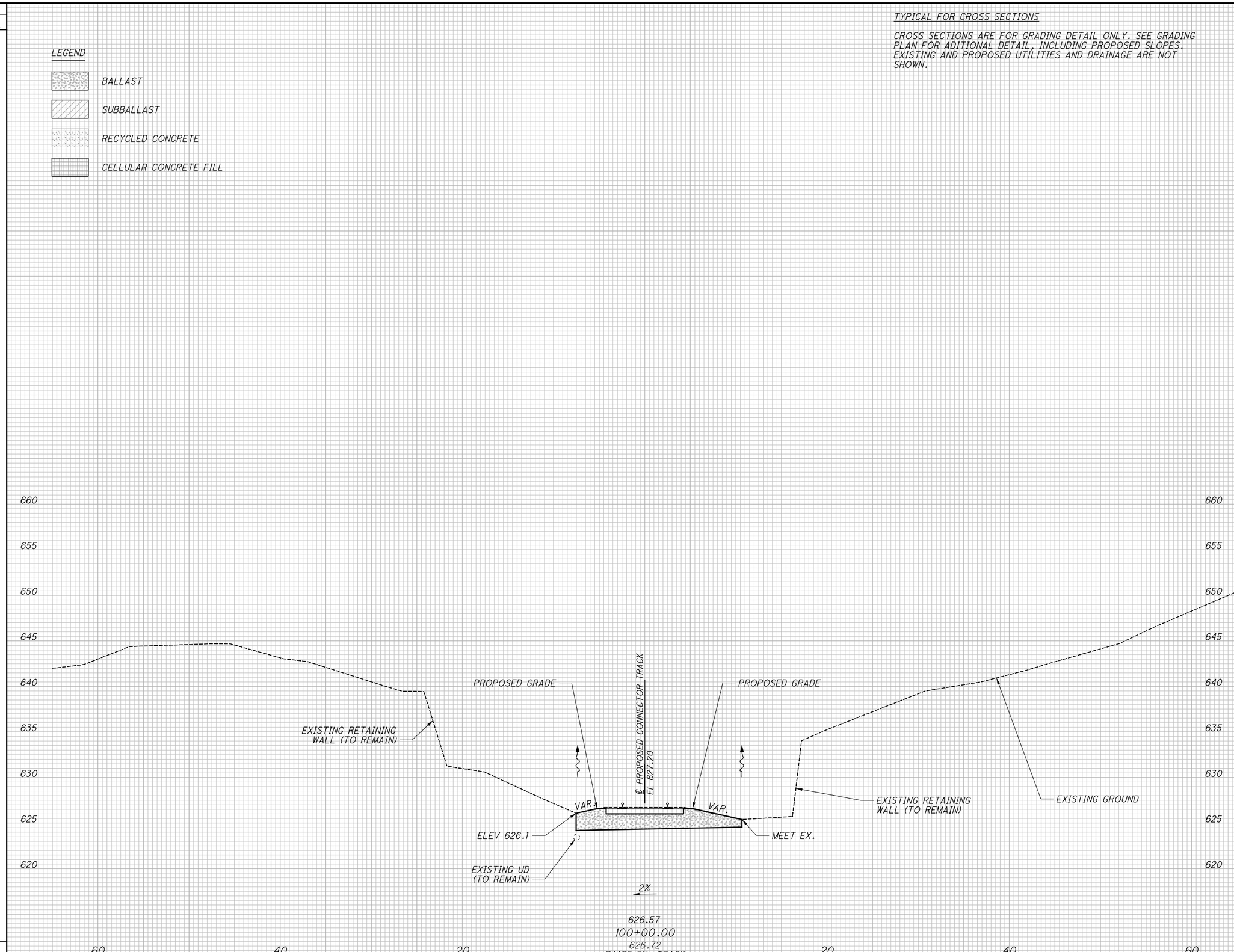

NO.	DATE	DESCRIPTION
0	2020-01-27	RFC ISSUE RECORD

CROSS SECTIONS - CONNECTOR TRACK

STA. 100+00.00

CUY-IR490/SR010-2.09/19.28

RECORD PLANS

RECORD PLANS

RECORD PLANS

BU-17A - GCRTA WYE TRACK

...\Sheets\BU-17A\96833_XS017.dgn 3/31/2020 4:49:57 PM Jonathan.Shurilla

SEEDING	
END WIDTH	SQ. YDS.

END AREA		VOLUME	
CUT	FILL	CUT	FILL

CALCULATED CMC
CHECKED JW

TYPICAL FOR CROSS SECTIONS

CROSS SECTIONS ARE FOR GRADING DETAIL ONLY. SEE GRADING PLAN FOR ADITIONAL DETAIL, INCLUDING PROPOSED SLOPES. EXISTING AND PROPOSED UTILITIES AND DRAINAGE ARE NOT SHOWN.

LEGEND

- *BALLAST*
- *SUBBALLAST*
- *RECYCLED CONCRETE*
- *CELLULAR CONCRETE FILL*

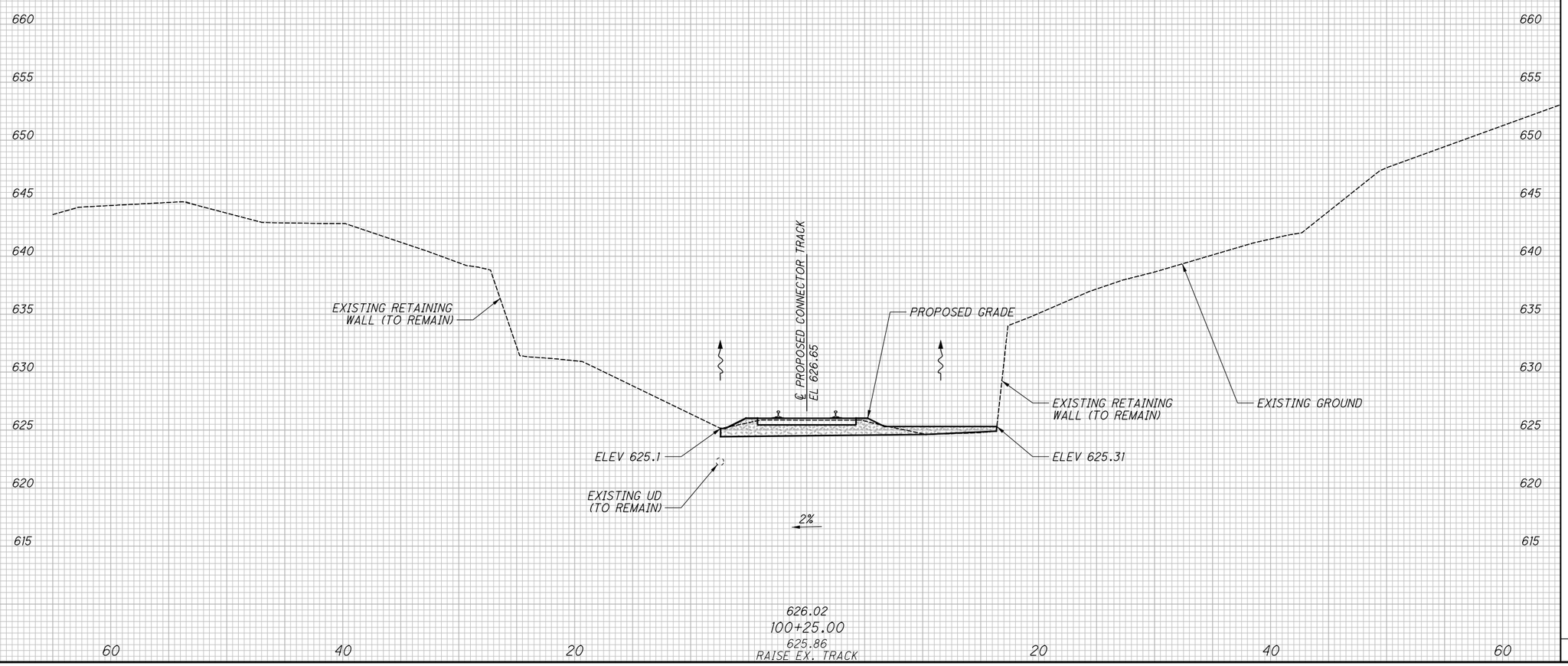

NO.	DATE	DESCRIPTION
0	2020-01-27	RFC ISSUE RECORD

CROSS SECTIONS - CONNECTOR TRACK

STA. 100+25.00

CUY-IR490/SR010-2.09/19.28

RECORD PLANS

RECORD PLANS

RECORD PLANS

BU-17A - GCRTA WYE TRACK
...\Sheets\BU-17A\96833_XS017.dgn 3/31/2020 4:49:58 PM Jonathan.Shurilla

SEEDING	
END WIDTH	SQ. YDS.

END AREA		VOLUME	
CUT	FILL	CUT	FILL

CALCULATED CMC
CHECKED JW

TYPICAL FOR CROSS SECTIONS

CROSS SECTIONS ARE FOR GRADING DETAIL ONLY. SEE GRADING PLAN FOR ADITIONAL DETAIL, INCLUDING PROPOSED SLOPES. EXISTING AND PROPOSED UTILITIES AND DRAINAGE ARE NOT SHOWN.

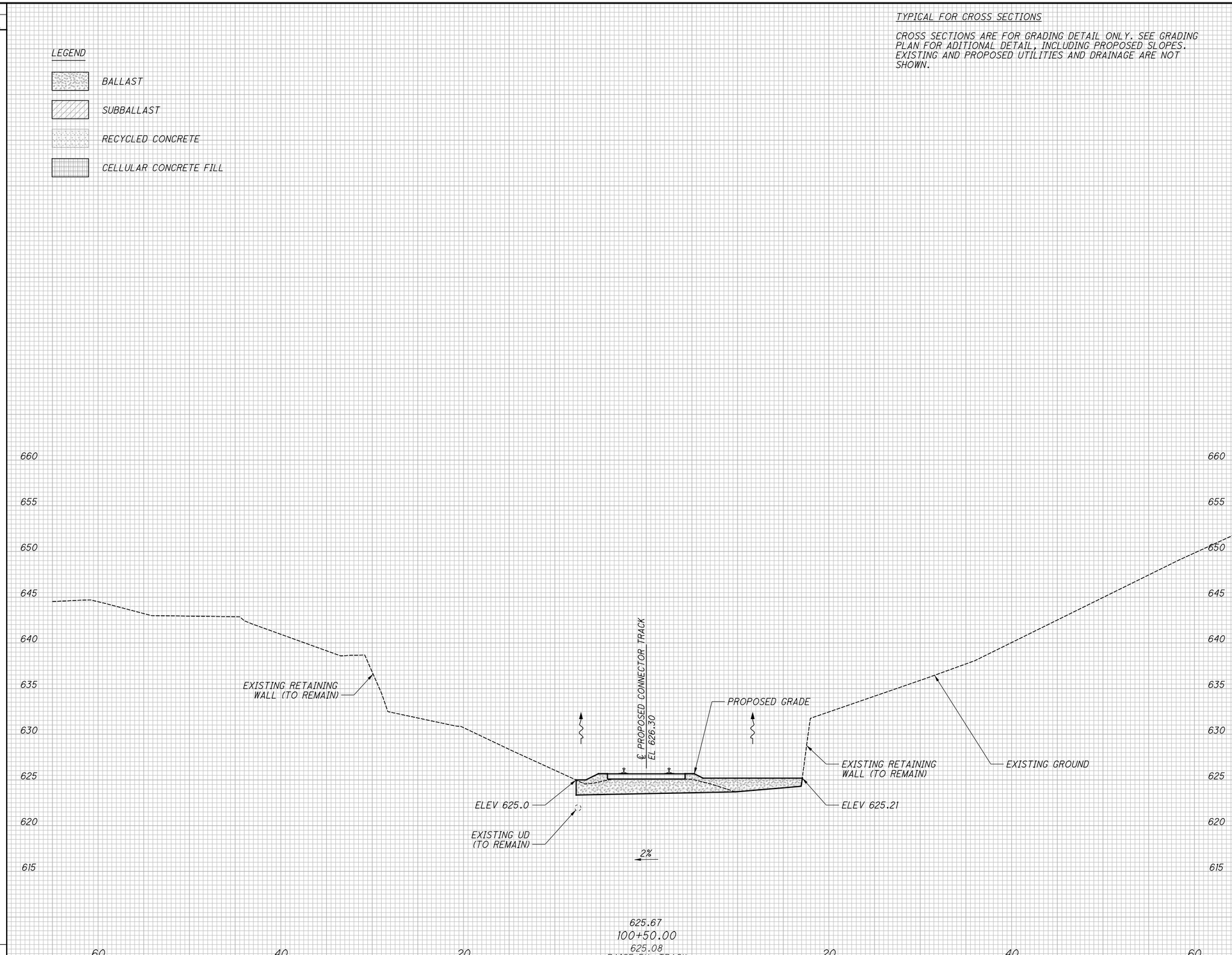

NO.	DATE	DESCRIPTION
0	2020-01-27	RFC ISSUE RECORD

CROSS SECTIONS - CONNECTOR TRACK

STA. 100+50.00

CUY-IR490/SR010-2.09/19.28

RECORD PLANS

RECORD PLANS

RECORD PLANS

BU-17A - GCRTA WYE TRACK
...\Sheets\BU-17A\96833_XS017.dgn 3/31/2020 4:49:58 PM Jonathan.Shurilla

SEEDING	
END WIDTH	SQ. YDS.

END AREA		VOLUME	
CUT	FILL	CUT	FILL

CALCULATED CMC
CHECKED JW

TYPICAL FOR CROSS SECTIONS

CROSS SECTIONS ARE FOR GRADING DETAIL ONLY. SEE GRADING PLAN FOR ADITIONAL DETAIL, INCLUDING PROPOSED SLOPES. EXISTING AND PROPOSED UTILITIES AND DRAINAGE ARE NOT SHOWN.

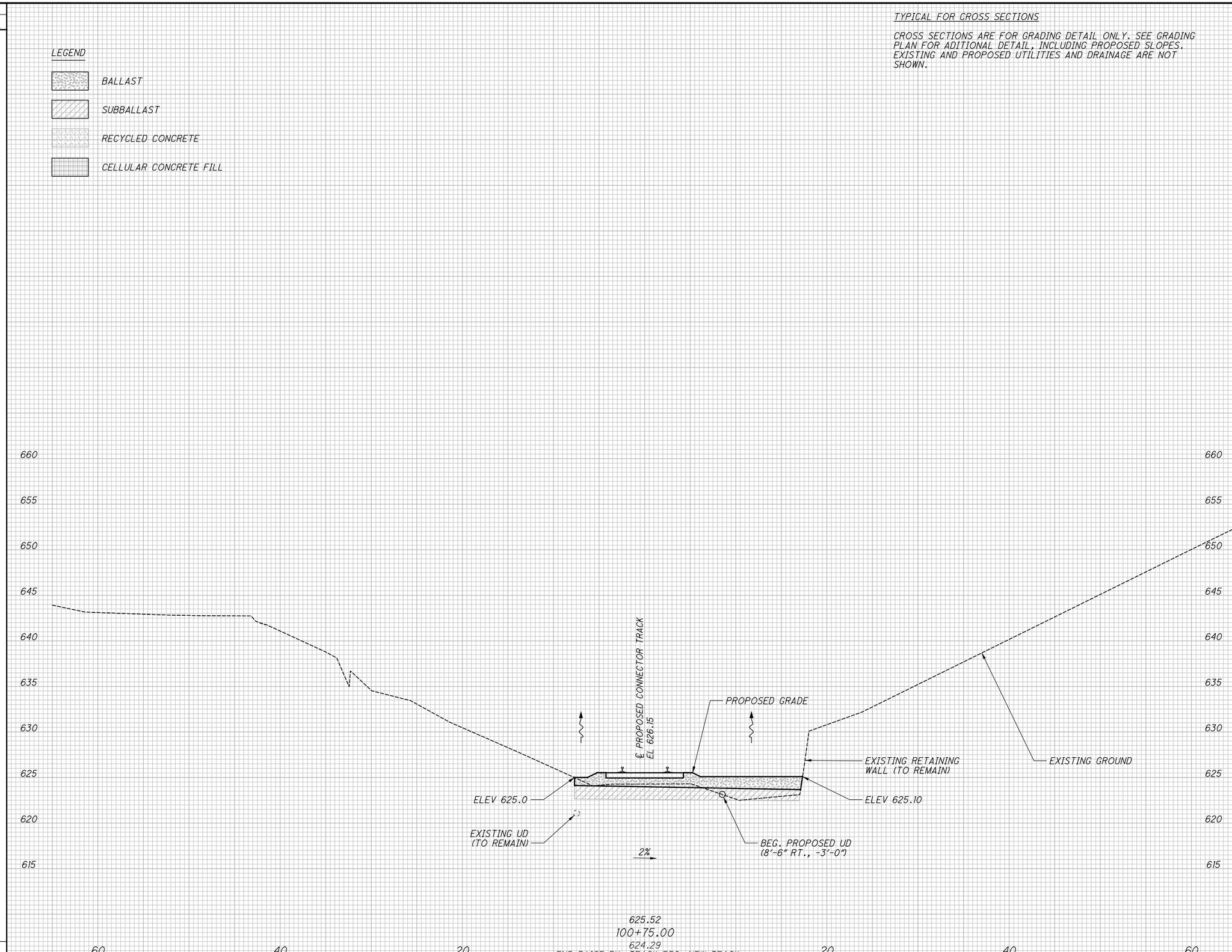

NO.	DATE	DESCRIPTION
0	2020-01-27	RFC ISSUE RECORD

CROSS SECTIONS - CONNECTOR TRACK
STA. 100+75.00

CUY-IR490/SR010-2.09/19.28
RECORD PLANS

RECORD PLANS

RECORD PLANS

BU-17A - GCRTA WYE TRACK
...\Sheets\BU-17A\96833_XS017.dgn 3/31/2020 4:49:59 PM Jonathan.Shurilla

SEEDING	
END WIDTH	SQ. YDS.

END AREA		VOLUME	
CUT	FILL	CUT	FILL

CALCULATED CMC
CHECKED JW

TYPICAL FOR CROSS SECTIONS

CROSS SECTIONS ARE FOR GRADING DETAIL ONLY. SEE GRADING PLAN FOR ADITIONAL DETAIL, INCLUDING PROPOSED SLOPES. EXISTING AND PROPOSED UTILITIES AND DRAINAGE ARE NOT SHOWN.

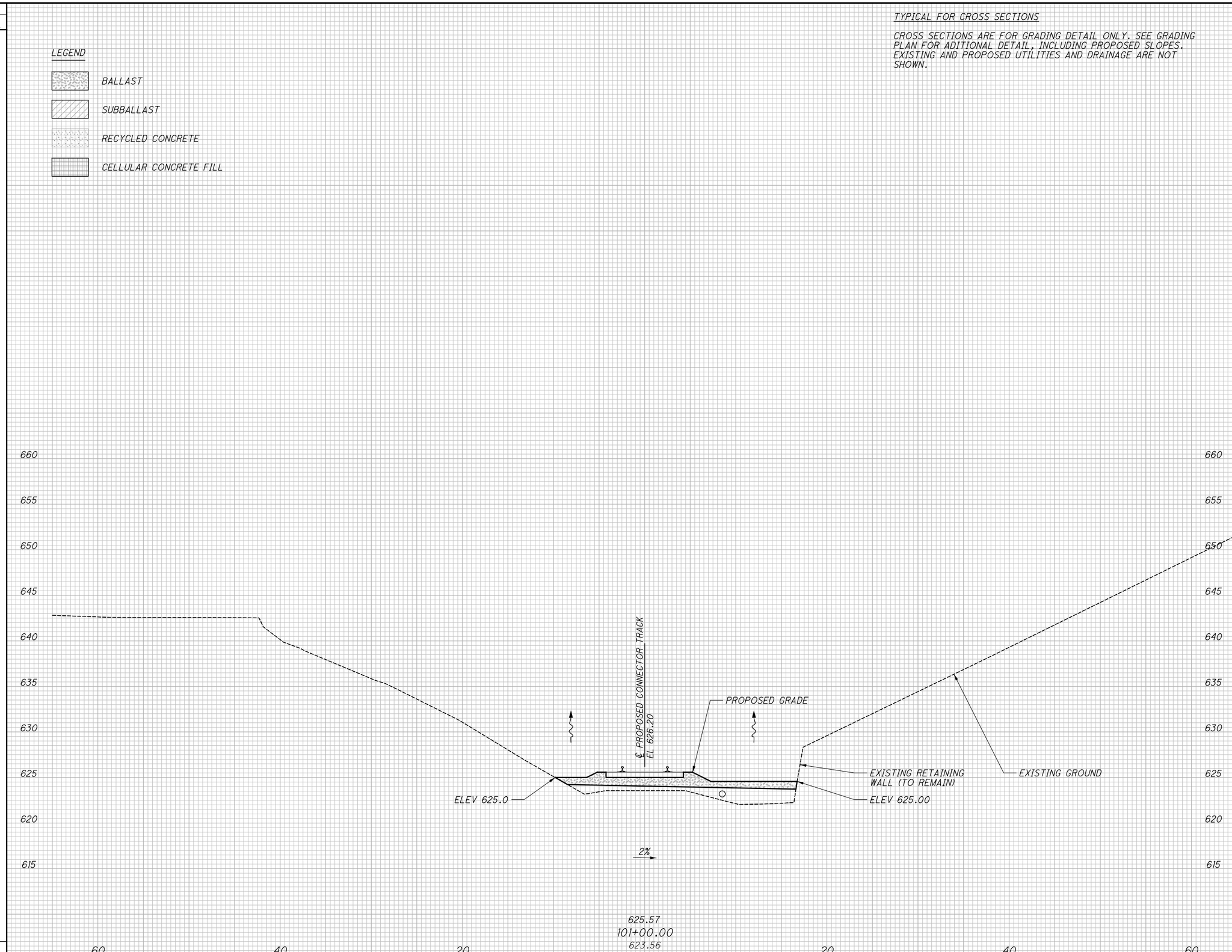

NO.	DATE	DESCRIPTION
0	2020-01-27	RFC ISSUE RECORD

CROSS SECTIONS - CONNECTOR TRACK
STA. 101+00.00

CUY-IR490/SR010-2.09/19.28
RECORD PLANS

RECORD PLANS

RECORD PLANS

BU-17A - GCRTA WYE TRACK
...\Sheets\BU-17A\96833_XS017.dgn 3/31/2020 4:50:00 PM Jonathan.Shurilla

SEEDING	
END WIDTH	SQ. YDS.

END AREA		VOLUME	
CUT	FILL	CUT	FILL

CALCULATED CMC
CHECKED JW

TYPICAL FOR CROSS SECTIONS

CROSS SECTIONS ARE FOR GRADING DETAIL ONLY. SEE GRADING PLAN FOR ADITIONAL DETAIL, INCLUDING PROPOSED SLOPES. EXISTING AND PROPOSED UTILITIES AND DRAINAGE ARE NOT SHOWN.

LEGEND

- *BALLAST*
- *SUBBALLAST*
- *RECYCLED CONCRETE*
- *CELLULAR CONCRETE FILL*

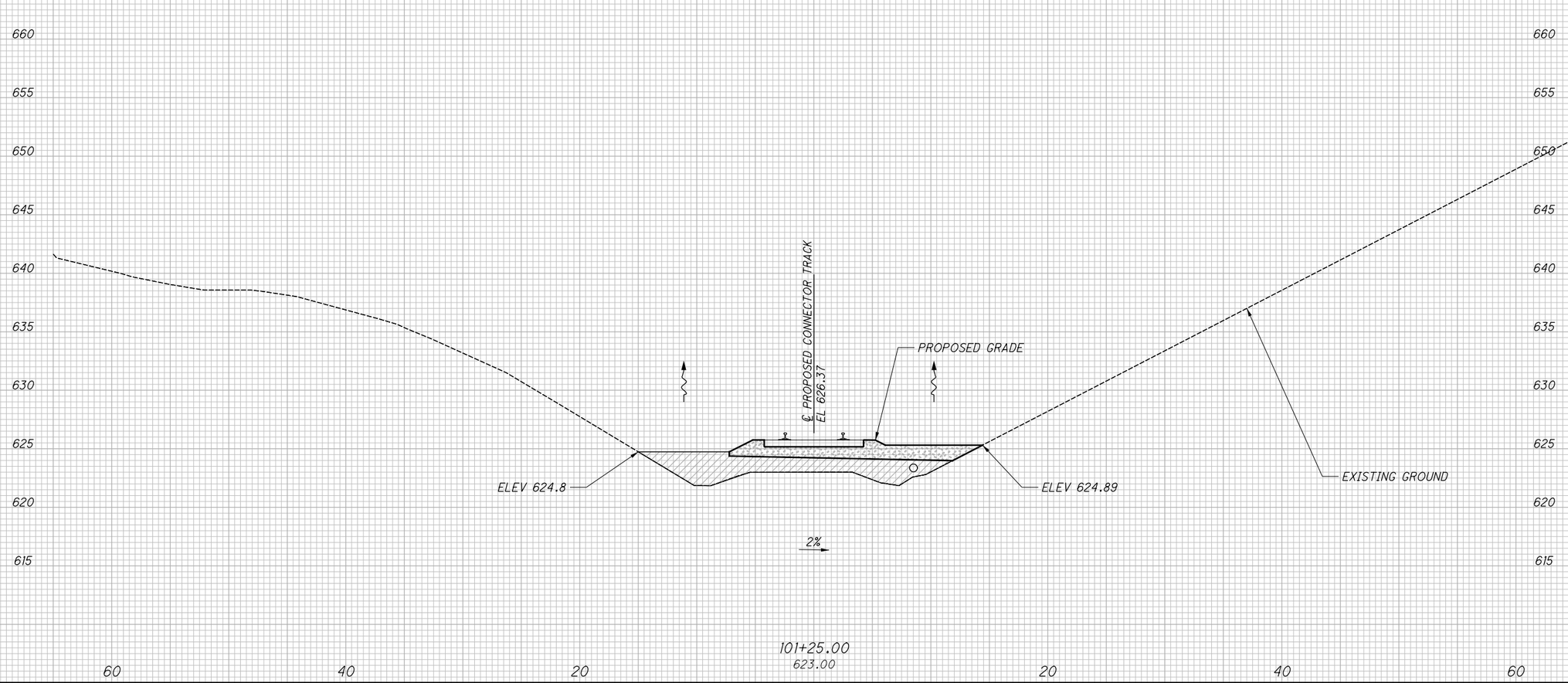

NO.	DATE	DESCRIPTION
0	2020-01-27	RFC ISSUE RECORD

CROSS SECTIONS - CONNECTOR TRACK
STA. 101+25.00

CUY-IR490/SR010-2.09/19.28
RECORD PLANS

RECORD PLANS

RECORD PLANS

BU-17A - GCRTA WYE TRACK
...\Sheets\BU-17A\96833_XS017.dgn 3/31/2020 4:50:00 PM Jonathan.Shurilla

SEEDING	
END WIDTH	SQ. YDS.

END AREA		VOLUME	
CUT	FILL	CUT	FILL

CALCULATED CMC
CHECKED JW

TYPICAL FOR CROSS SECTIONS

CROSS SECTIONS ARE FOR GRADING DETAIL ONLY. SEE GRADING PLAN FOR ADITIONAL DETAIL, INCLUDING PROPOSED SLOPES. EXISTING AND PROPOSED UTILITIES AND DRAINAGE ARE NOT SHOWN.

LEGEND

- *BALLAST*
- *SUBBALLAST*
- *RECYCLED CONCRETE*
- *CELLULAR CONCRETE FILL*

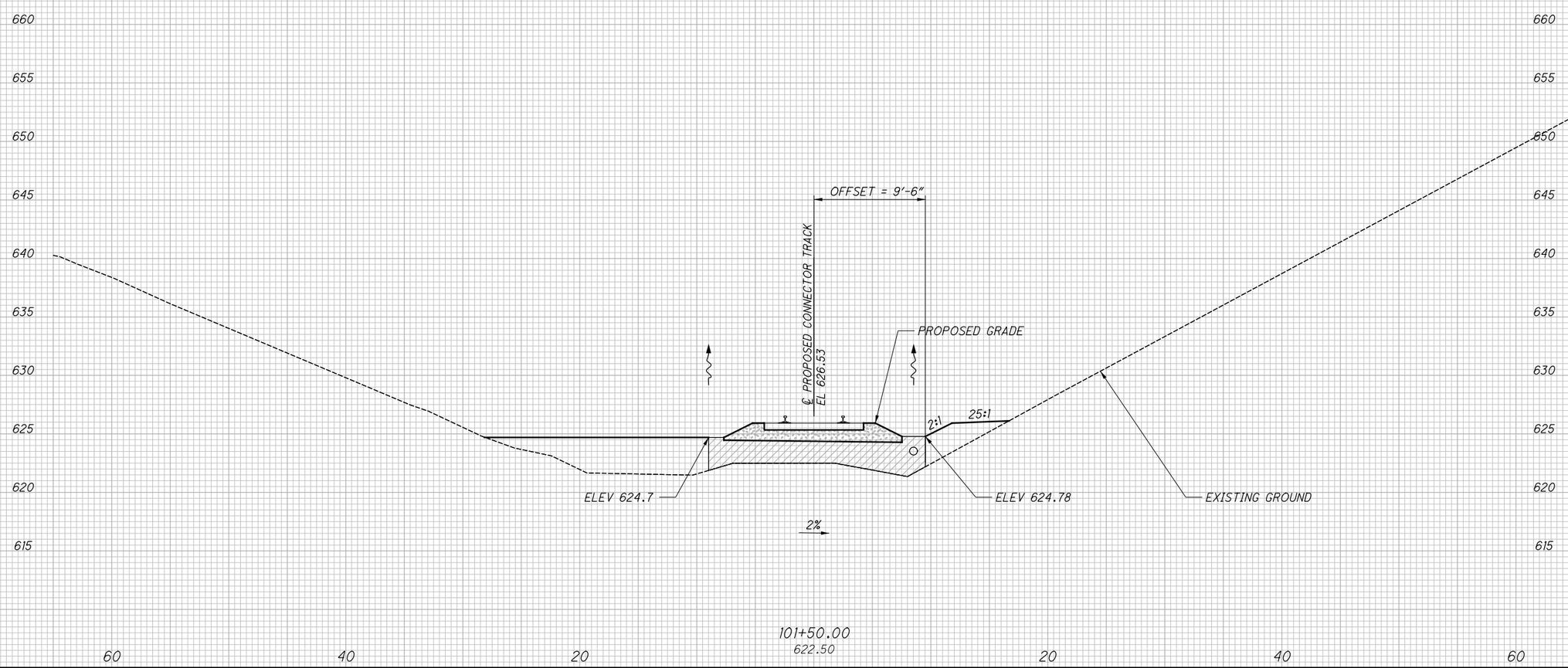

NO.	DATE	DESCRIPTION
0	2020-01-27	RFC ISSUE RECORD

CROSS SECTIONS - CONNECTOR TRACK
STA. 101+50.00

CUY-IR490/SR010-2.09/19.28
RECORD PLANS

RECORD PLANS

RECORD PLANS

BU-17A - GCRTA WYE TRACK
...\Sheets\BU-17A\96833_XS017.dgn 3/31/2020 4:50:01 PM Jonathan.Shurilla

SEEDING	
END WIDTH	SQ. YDS.

END AREA		VOLUME	
CUT	FILL	CUT	FILL

CALCULATED CMC
CHECKED JW

TYPICAL FOR CROSS SECTIONS

CROSS SECTIONS ARE FOR GRADING DETAIL ONLY. SEE GRADING PLAN FOR ADITIONAL DETAIL, INCLUDING PROPOSED SLOPES. EXISTING AND PROPOSED UTILITIES AND DRAINAGE ARE NOT SHOWN.

LEGEND

- *BALLAST*
- *SUBBALLAST*
- *RECYCLED CONCRETE*
- *CELLULAR CONCRETE FILL*

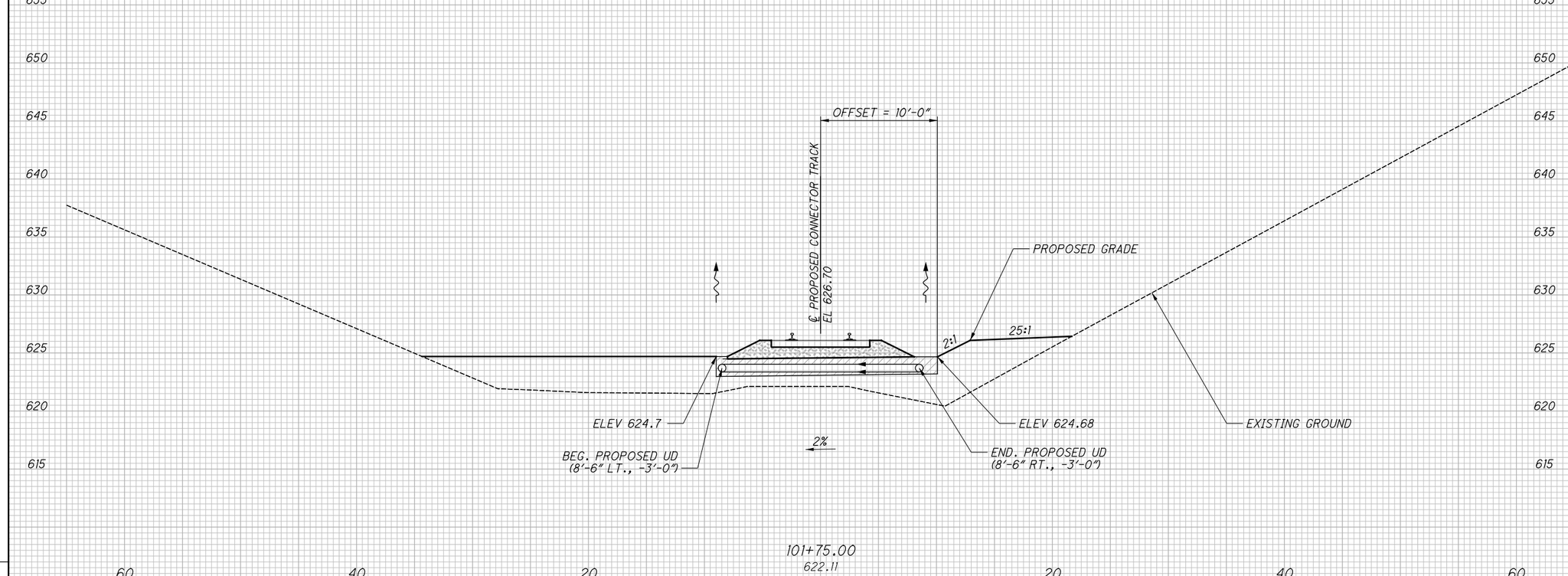

NO.	DATE	DESCRIPTION
0	2020-01-27	RFC ISSUE RECORD

CROSS SECTIONS - CONNECTOR TRACK

STA. 101+75.00

CUY-IR490/SR010-2.09/19.28

RECORD PLANS

RECORD PLANS

RECORD PLANS

BU-17A - GCRTA WYE TRACK
...\Sheets\BU-17A\96833_XS017.dgn 3/31/2020 4:50:02 PM Jonathan.Shurilla

SEEDING	
END WIDTH	SQ. YDS.

END AREA		VOLUME	
CUT	FILL	CUT	FILL

CALCULATED CMC
CHECKED JW

TYPICAL FOR CROSS SECTIONS

CROSS SECTIONS ARE FOR GRADING DETAIL ONLY. SEE GRADING PLAN FOR ADITIONAL DETAIL, INCLUDING PROPOSED SLOPES. EXISTING AND PROPOSED UTILITIES AND DRAINAGE ARE NOT SHOWN.

LEGEND

- *BALLAST*
- *SUBBALLAST*
- *RECYCLED CONCRETE*
- *CELLULAR CONCRETE FILL*

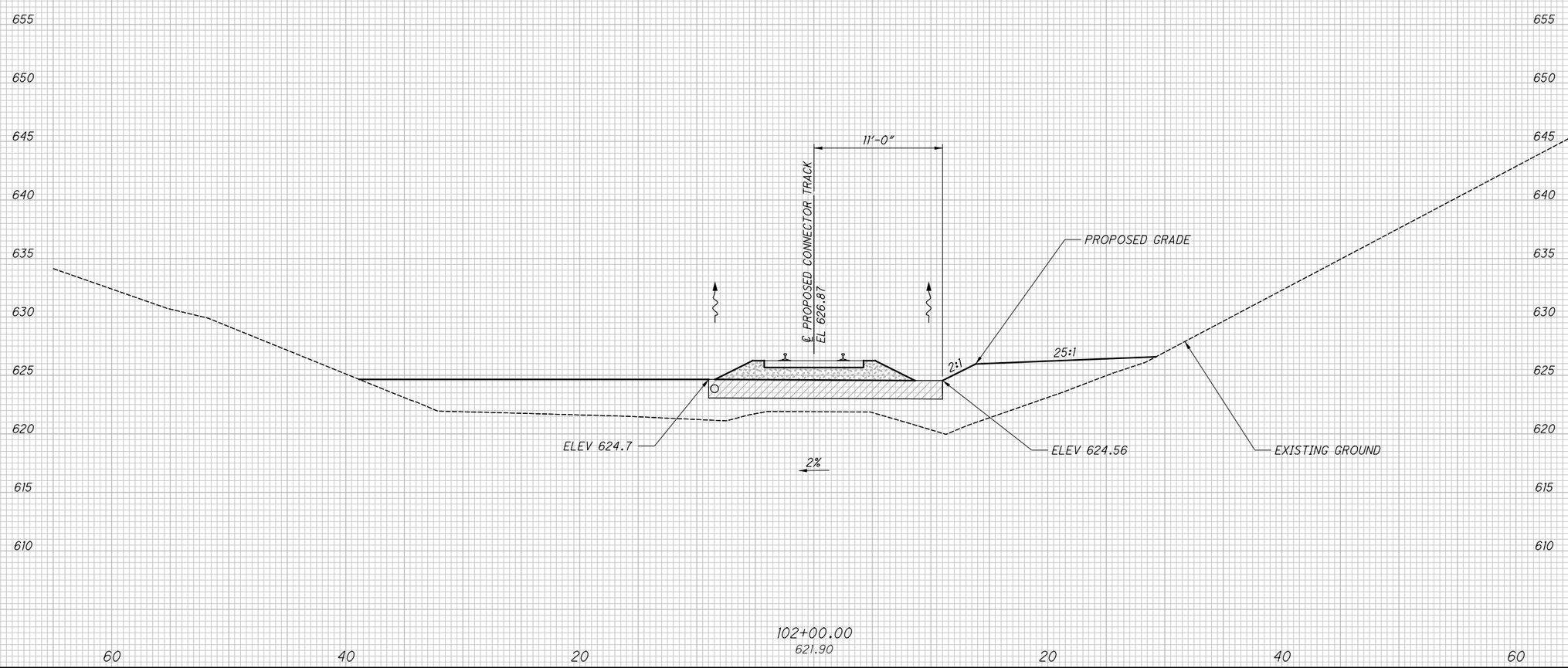

NO.	DATE	DESCRIPTION
0	2020-01-27	RFC ISSUE RECORD

CROSS SECTIONS - CONNECTOR TRACK

STA. 102+00.00

RECORD PLANS

CUY-IR490/SR010-2.09/19.28

RECORD PLANS

BU-17A - GCRTA WYE TRACK
...\Sheets\BU-17A\96833_XS017.dgn 3/31/2020 4:50:02 PM Jonathan.Shurilla

SEEDING	
END WIDTH	SQ. YDS.

STA. 102+58.26 BEGIN GRADING PER WALKWAY DETAIL ON SHEET 98

TYPICAL FOR CROSS SECTIONS

CROSS SECTIONS ARE FOR GRADING DETAIL ONLY. SEE GRADING PLAN FOR ADITIONAL DETAIL, INCLUDING PROPOSED SLOPES. EXISTING AND PROPOSED UTILITIES AND DRAINAGE ARE NOT SHOWN.

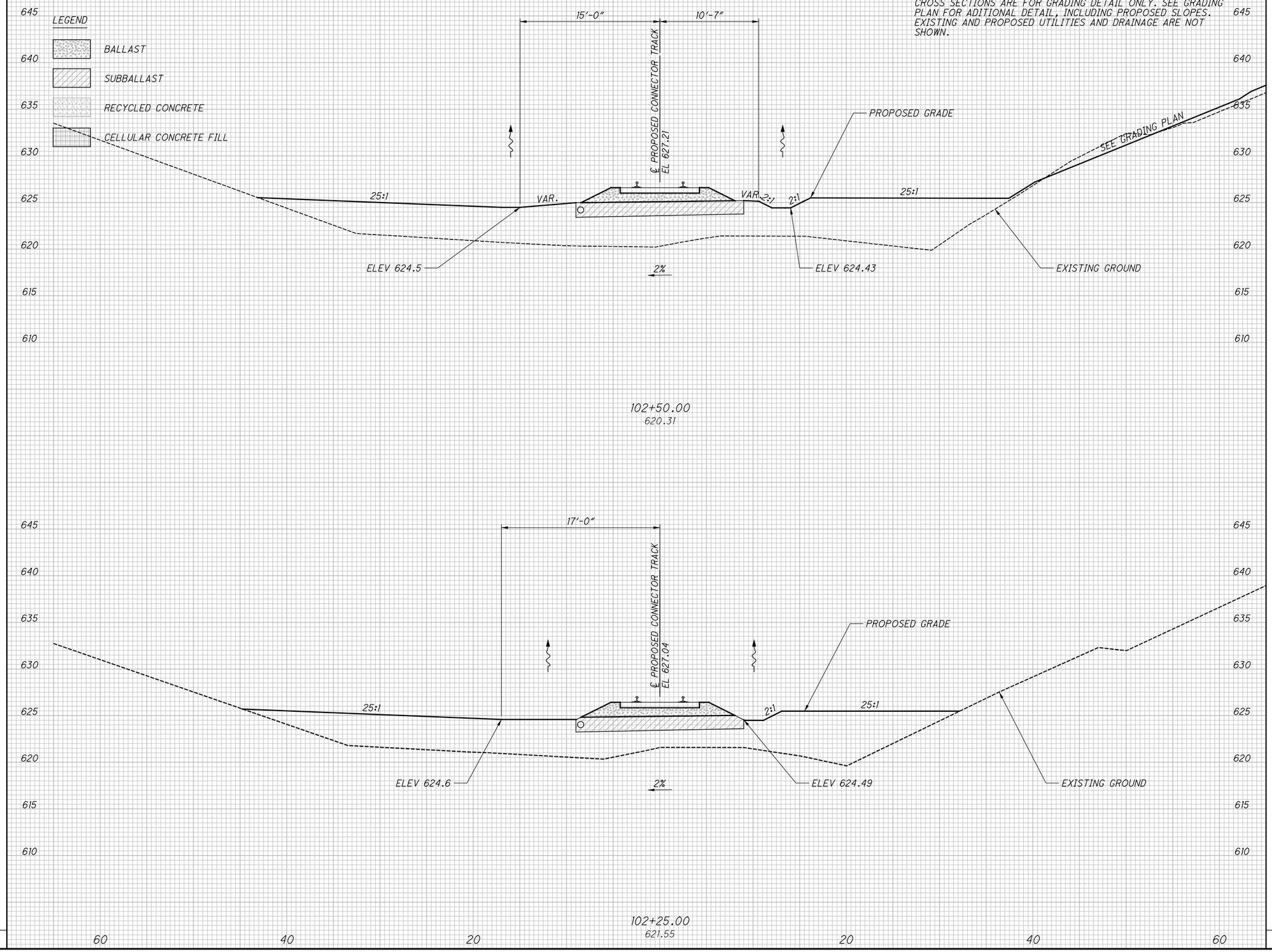

END AREA		VOLUME	
CUT	FILL	CUT	FILL

CALCULATED CMC
CHECKED JW

CROSS SECTIONS - CONNECTOR TRACK
STA. 102+25.00 TO STA. 102+50.00

RECORD PLANS

NO.	DATE	DESCRIPTION
0	2020-01-27	RFC ISSUE RECORD

CUY-IR490/SR010-2.09/19.28
RECORD PLANS

BU-17A - GCRTA WYE TRACK
...\Sheets\BU-17A\96833_XS017.dgn 3/31/2020 4:50:03 PM Jonathan.Shurilla

SEEDING	
END WIDTH	SQ. YDS.

END AREA		VOLUME	
CUT	FILL	CUT	FILL

CALCULATED CMC
CHECKED JW

TYPICAL FOR CROSS SECTIONS

CROSS SECTIONS ARE FOR GRADING DETAIL ONLY. SEE GRADING PLAN FOR ADITIONAL DETAIL, INCLUDING PROPOSED SLOPES. EXISTING AND PROPOSED UTILITIES AND DRAINAGE ARE NOT SHOWN.

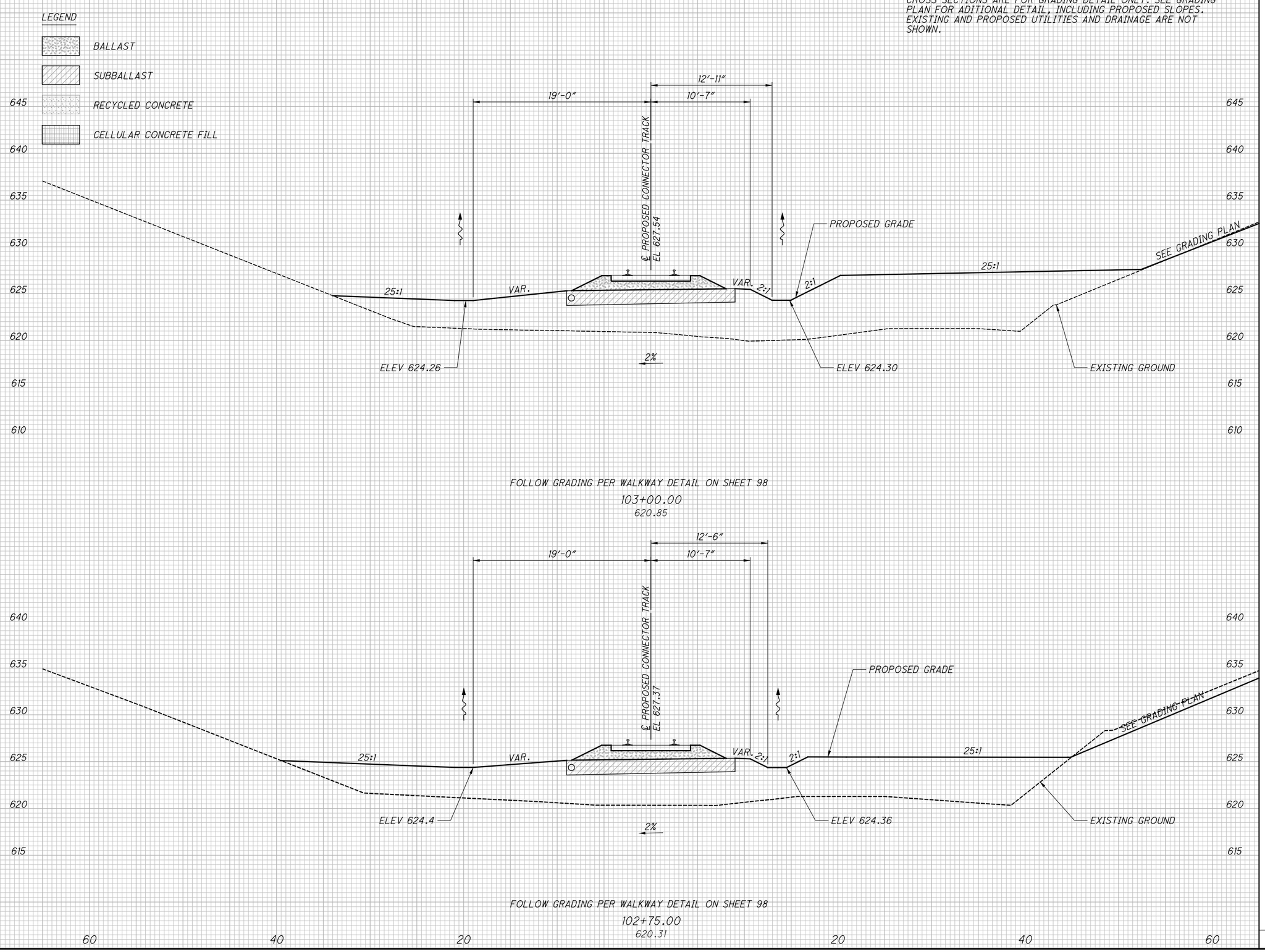

NO.	DATE	DESCRIPTION
0	2020-01-27	RFC ISSUE RECORD

CROSS SECTIONS - CONNECTOR TRACK
STA. 102+75.00 TO STA. 103+00.00

RECORD PLANS

RECORD PLANS

CUY-IR490/SR010-2.09/19.28

RECORD PLANS

BU-17A - GCRTA WYE TRACK
...\Sheets\BU-17A\96833_XS017.dgn 3/31/2020 4:50:04 PM Jonathan.Shurilla

SEEDING	
END WIDTH	SQ. YDS.

END AREA		VOLUME	
CUT	FILL	CUT	FILL

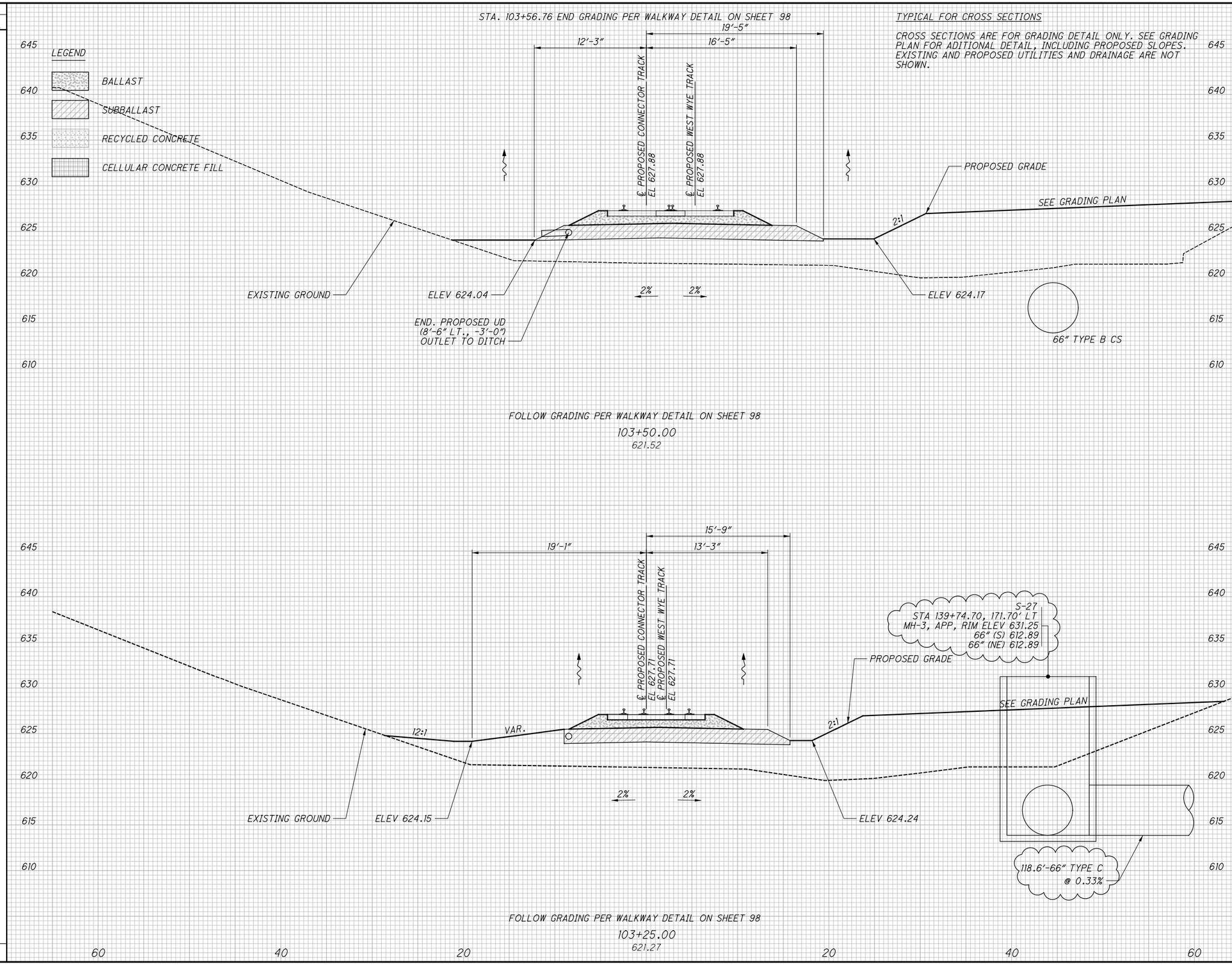

CALCULATED	CHECKED
CMC	JW

CROSS SECTIONS - CONNECTOR TRACK
STA. 103+25.00 TO STA. 103+50.00

RECORD PLANS

RECORD PLANS

NO.	DATE	DESCRIPTION
1	2024-09-10	RECORD DRAWINGS
0	2020-01-27	RFC

ISSUE RECORD

CUY-IR490/SR010-2.09/19.28

RECORD PLANS

BU-17A - GCRTA WYE TRACK
...\Sheets\BU-17A\96833_XS017.dgn 12/4/2024 10:07:18 AM Rohit.Bk

SEEDING	
END WIDTH	SQ. YDS.

END AREA		VOLUME	
CUT	FILL	CUT	FILL

CALCULATED CMC
CHECKED JW

TYPICAL FOR CROSS SECTIONS

CROSS SECTIONS ARE FOR GRADING DETAIL ONLY. SEE GRADING PLAN FOR ADITIONAL DETAIL, INCLUDING PROPOSED SLOPES. EXISTING AND PROPOSED UTILITIES AND DRAINAGE ARE NOT SHOWN.

LEGEND

- *BALLAST*
- *SUBBALLAST*
- *RECYCLED CONCRETE*
- *CELLULAR CONCRETE FILL*

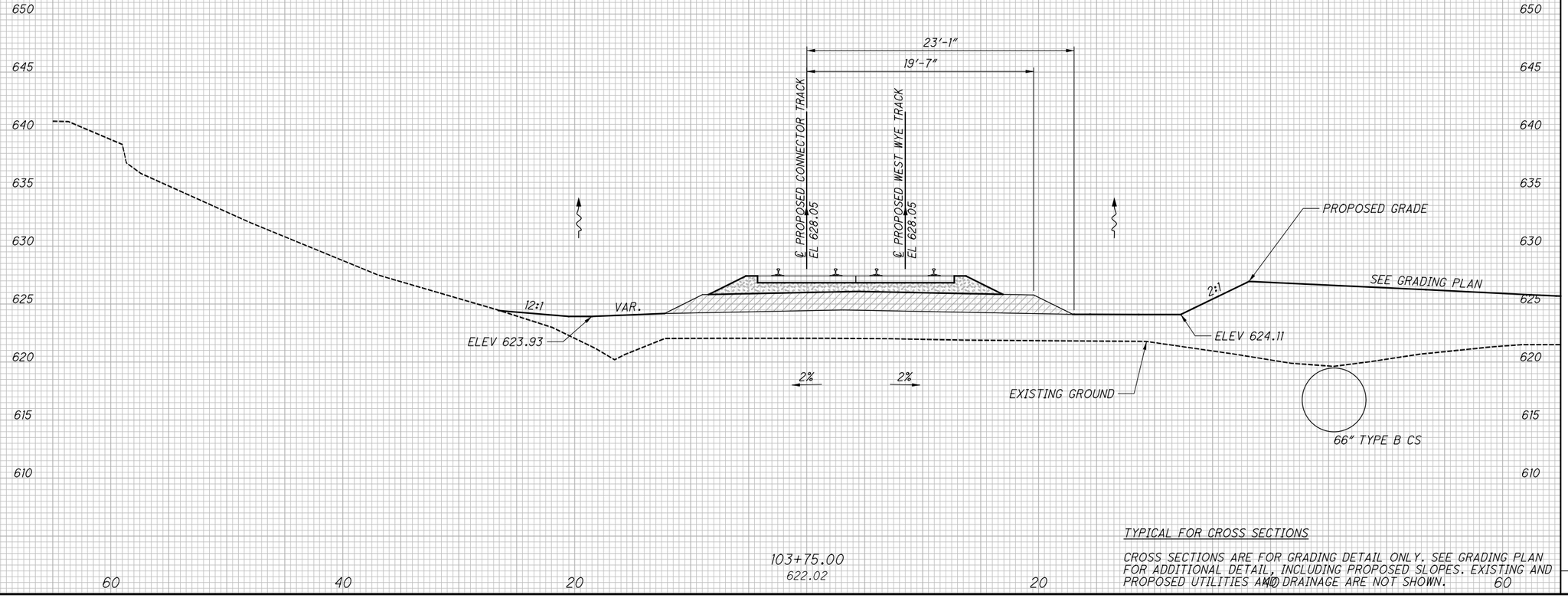

TYPICAL FOR CROSS SECTIONS

CROSS SECTIONS ARE FOR GRADING DETAIL ONLY. SEE GRADING PLAN FOR ADDITIONAL DETAIL, INCLUDING PROPOSED SLOPES. EXISTING AND PROPOSED UTILITIES AND DRAINAGE ARE NOT SHOWN.

NO.	DATE	DESCRIPTION
0	2020-01-27	RFC ISSUE RECORD

CROSS SECTIONS - CONNECTOR TRACK

STA. 103+75.00

RECORD PLANS

CUY-IR490/SR010-2.09/19.28

RECORD PLANS

BU-17A - GCRTA WYE TRACK
...\Sheets\BU-17A\96833_XS017.dgn 3/31/2020 4:50:05 PM Jonathan.Shurilla

SEEDING	
END WIDTH	SQ. YDS.

END AREA		VOLUME	
CUT	FILL	CUT	FILL

CALCULATED CMC
CHECKED JW

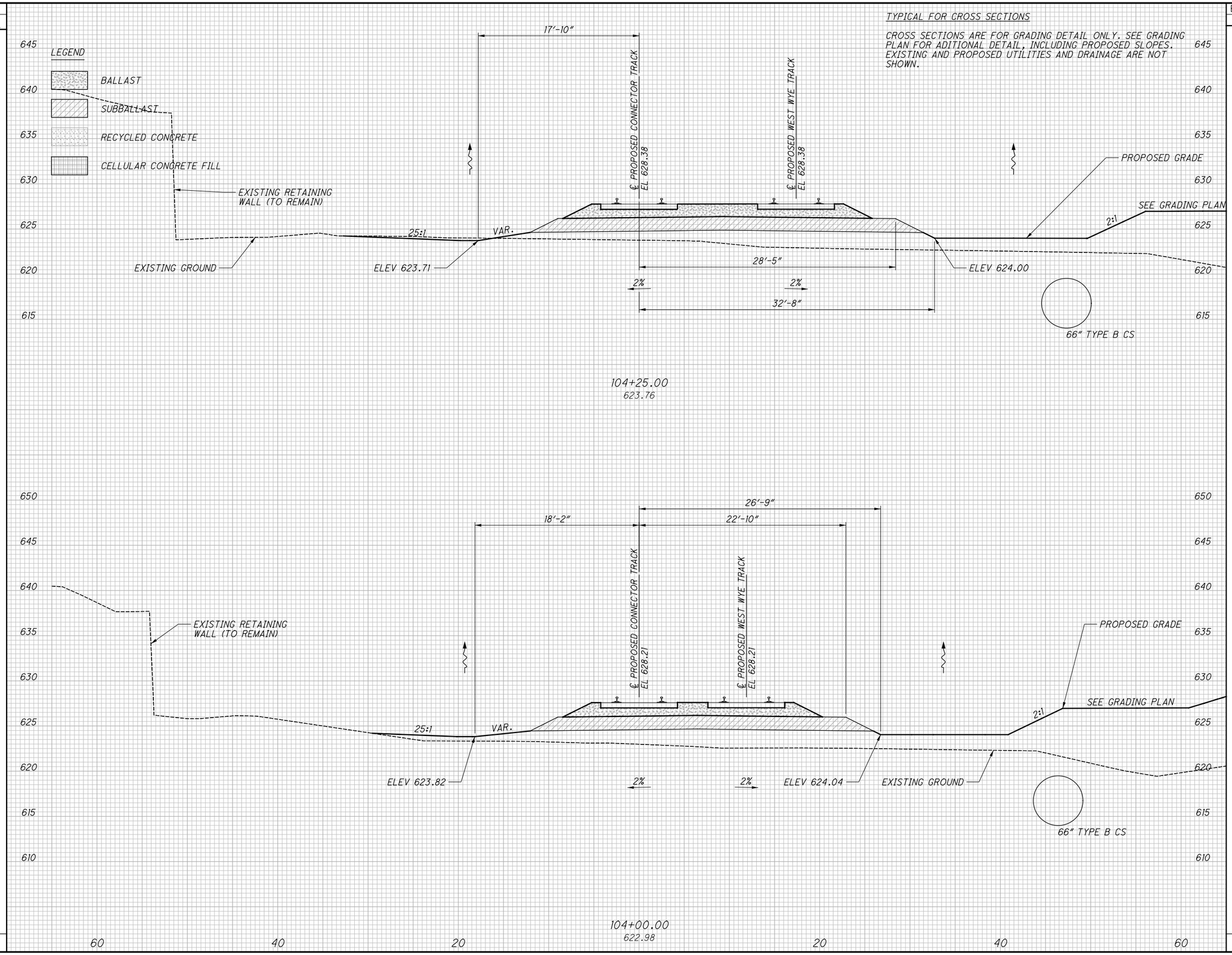

CROSS SECTIONS - CONNECTOR TRACK
STA. 104+00.00 TO STA. 104+25.00

RECORD PLANS

NO.	DATE	DESCRIPTION
0	2020-01-27	RFC ISSUE RECORD

CUY-IR490/SR010-2.09/19.28
RECORD PLANS

BU-17A - GCRTA WYE TRACK
...\Sheets\BU-17A\96833_XS017.dgn 3/31/2020 4:50:06 PM Jonathan.Shurilla

SEEDING	
END WIDTH	SQ. YDS.

END AREA		VOLUME	
CUT	FILL	CUT	FILL

TYPICAL FOR CROSS SECTIONS

CROSS SECTIONS ARE FOR GRADING DETAIL ONLY. SEE GRADING PLAN FOR ADITIONAL DETAIL, INCLUDING PROPOSED SLOPES. EXISTING AND PROPOSED UTILITIES AND DRAINAGE ARE NOT SHOWN.

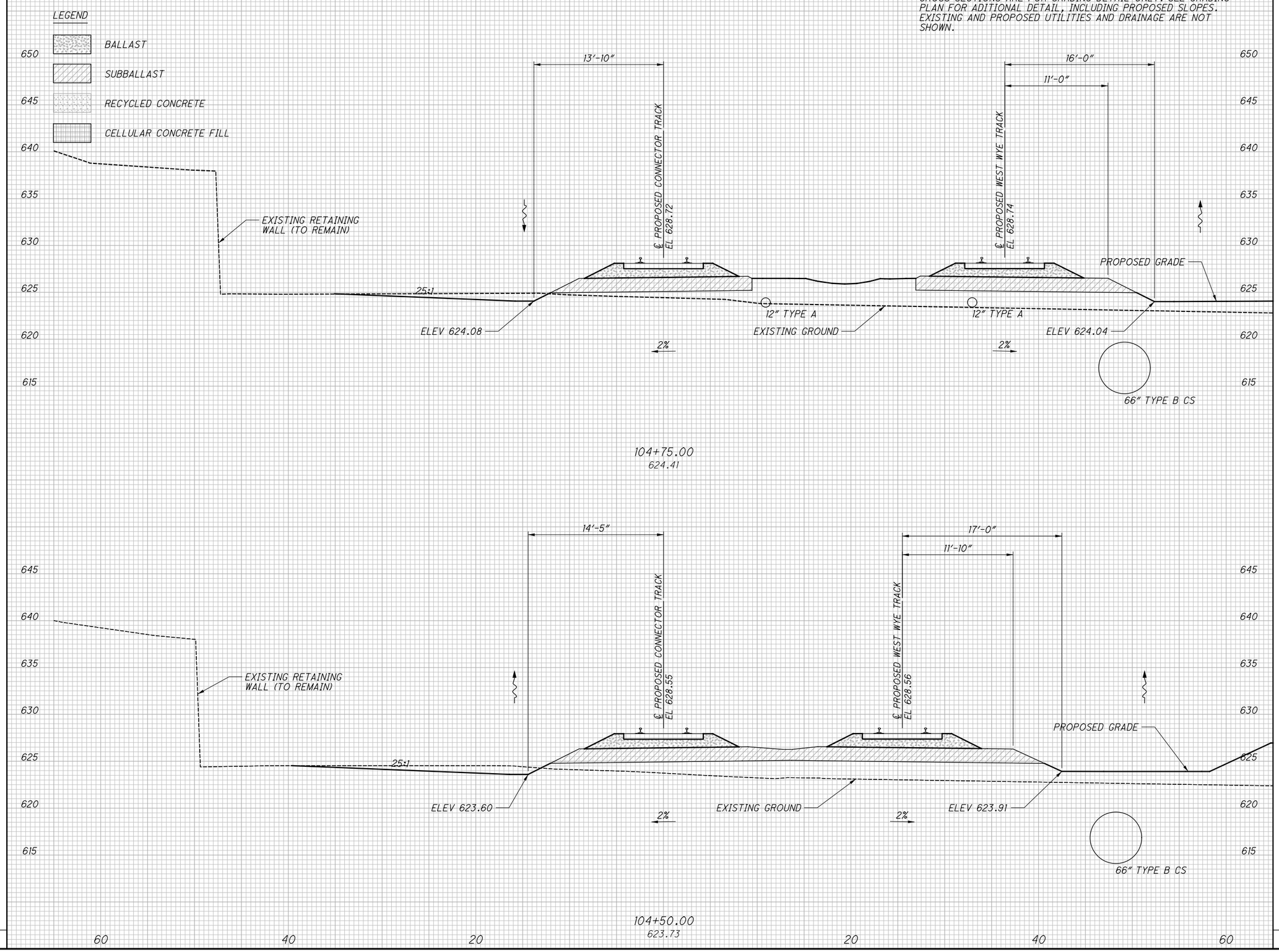

CALCULATED	CHECKED
CMC	JW

CROSS SECTIONS - CONNECTOR TRACK
STA. 104+50.00 TO STA. 104+75.00

RECORD PLANS

RECORD PLANS

NO.	DATE	DESCRIPTION
0	2020-01-27	RFC ISSUE RECORD

CUY-IR490/SR010-2.09/19.28

RECORD PLANS

BU-17A - GCRTA WYE TRACK
...\Sheets\BU-17A\96833_XS017.dgn 3/31/2020 4:50:07 PM Jonathan.Shurilla

SEEDING	
END WIDTH	SQ. YDS.

END AREA		VOLUME	
CUT	FILL	CUT	FILL

CALCULATED CMC
CHECKED JW

TYPICAL FOR CROSS SECTIONS

CROSS SECTIONS ARE FOR GRADING DETAIL ONLY. SEE GRADING PLAN FOR ADITIONAL DETAIL, INCLUDING PROPOSED SLOPES. EXISTING AND PROPOSED UTILITIES AND DRAINAGE ARE NOT SHOWN.

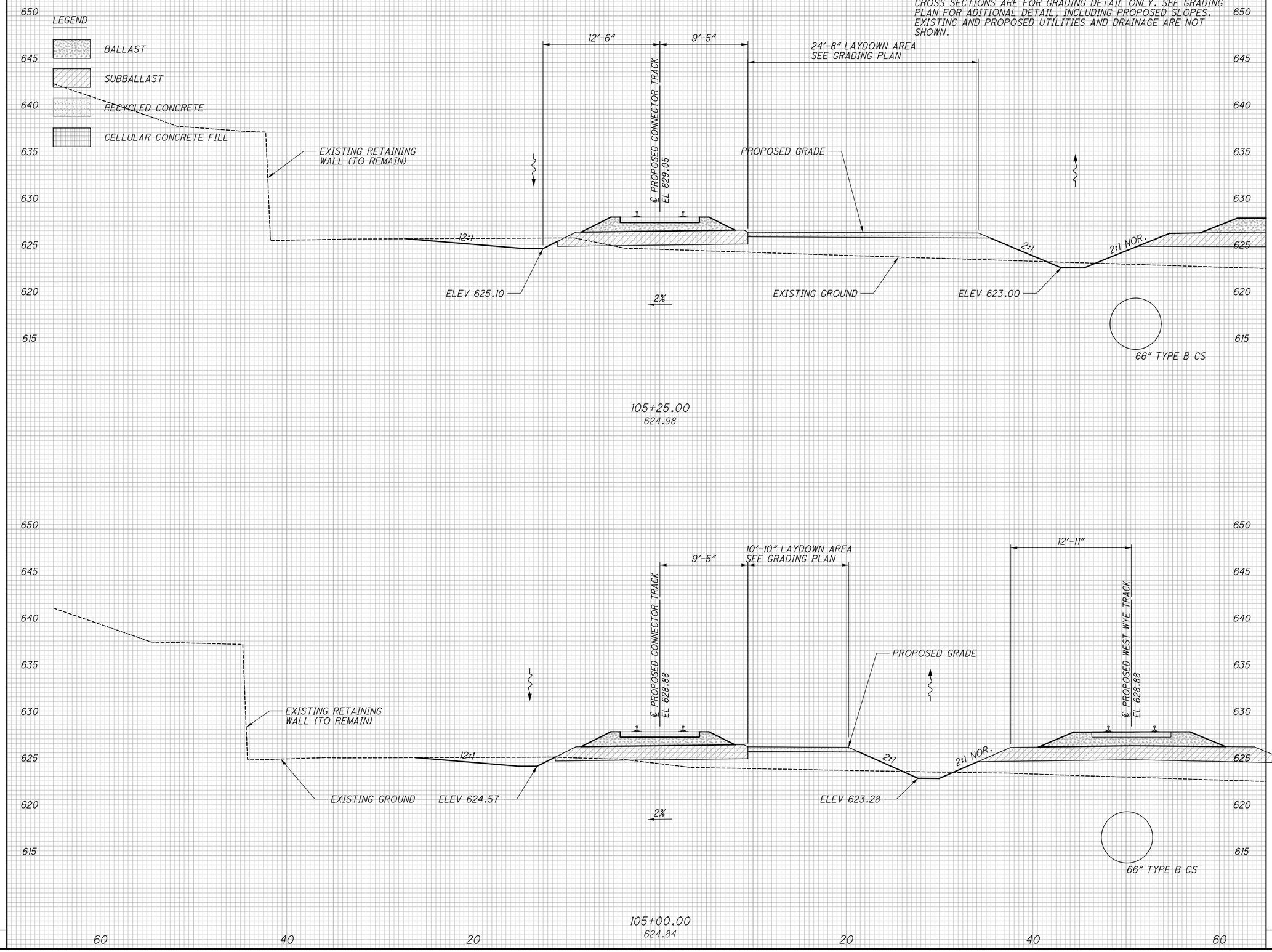

NO.	DATE	DESCRIPTION
0	2020-01-21	RFC ISSUE RECORD

CROSS SECTIONS - CONNECTOR TRACK STA. 105+25.00

RECORD PLANS

CUY-IR490/SR010-2.09/19.28

RECORD PLANS

BU-17A - GCRTA WYE TRACK
...\Sheets\BU-17A\96833_XS017.dgn 3/31/2020 4:50:07 PM Jonathan.Shurilla

SEEDING	
END WIDTH	SQ. YDS.

END AREA		VOLUME	
CUT	FILL	CUT	FILL

TYPICAL FOR CROSS SECTIONS

CROSS SECTIONS ARE FOR GRADING DETAIL ONLY. SEE GRADING PLAN FOR ADITIONAL DETAIL, INCLUDING PROPOSED SLOPES. EXISTING AND PROPOSED UTILITIES AND DRAINAGE ARE NOT SHOWN.

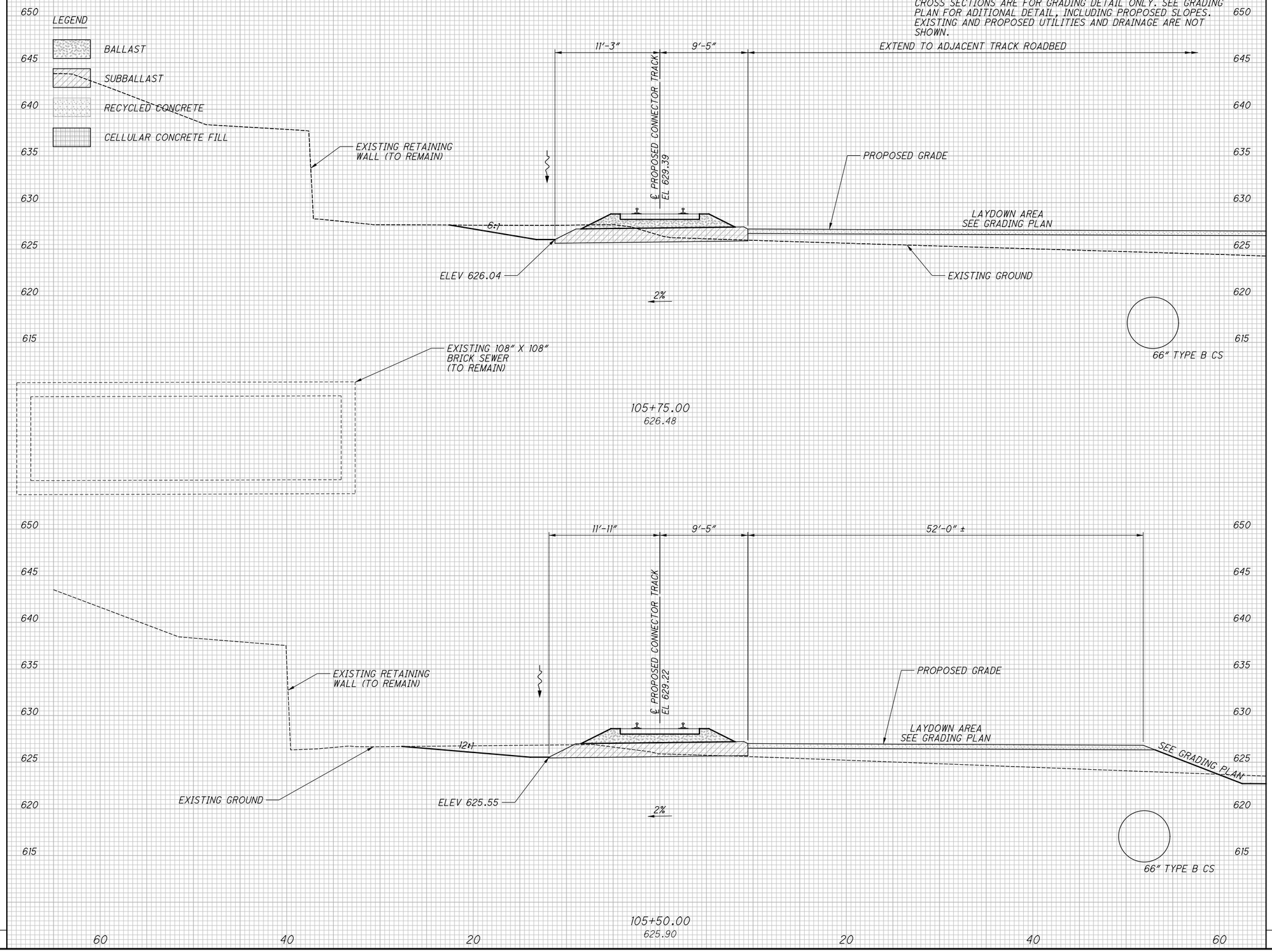

CALCULATED CMC
CHECKED JW

CROSS SECTIONS - CONNECTOR TRACK
STA. 105+50.00 TO STA. 105+75.00

RECORD PLANS

NO.	DATE	DESCRIPTION
0	2020-01-27	RFC ISSUE RECORD

CUY-IR490/SR010-2.09/19.28

RECORD PLANS

BU-17A - GCRTA WYE TRACK
...\Sheets\BU-17A\96833_XS017.dgn 3/31/2020 4:50:08 PM Jonathan.Shurilla

SEEDING	
END WIDTH	SQ. YDS.

END AREA		VOLUME	
CUT	FILL	CUT	FILL

CALCULATED CMC
CHECKED JW

TYPICAL FOR CROSS SECTIONS

CROSS SECTIONS ARE FOR GRADING DETAIL ONLY. SEE GRADING PLAN FOR ADITIONAL DETAIL, INCLUDING PROPOSED SLOPES. EXISTING AND PROPOSED UTILITIES AND DRAINAGE ARE NOT SHOWN.

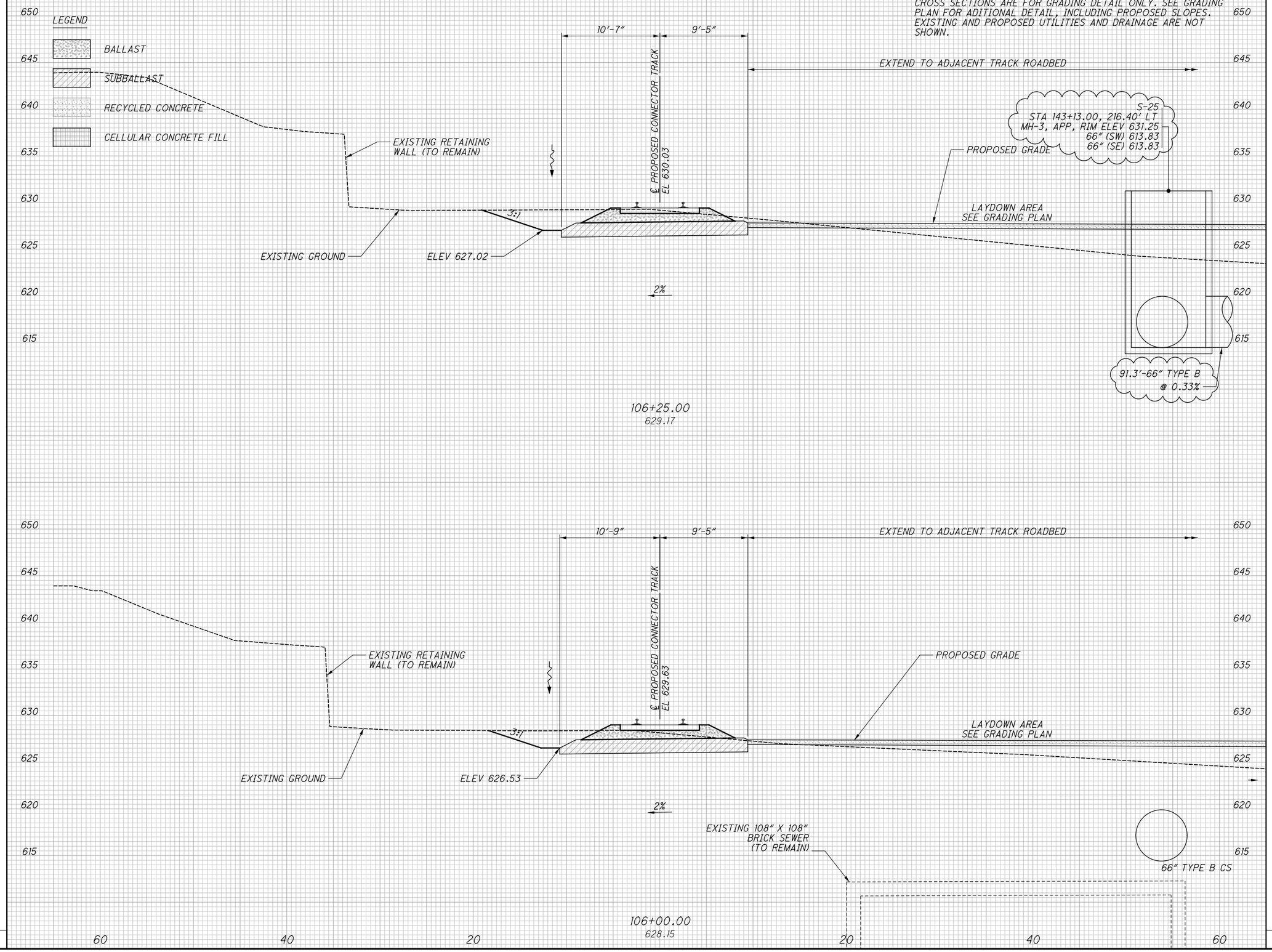

NO.	DATE	DESCRIPTION
1	2024-09-10	RECORD DRAWINGS
0	2020-01-27	RFC

ISSUE RECORD

CROSS SECTIONS - CONNECTOR TRACK
STA. 106+00.00 TO STA. 106+25.00

RECORD PLANS

CUY-IR490/SR010-2.09/19.28

RECORD PLANS

BU-17A - GCRTA WYE TRACK
...\Sheets\BU-17A\96833_XS017.dgn 12/4/2024 10:40:04 AM Rohit.Bk

SEEDING	
END WIDTH	SQ. YDS.

END AREA		VOLUME	
CUT	FILL	CUT	FILL

CALCULATED CMC
CHECKED JW

TYPICAL FOR CROSS SECTIONS

CROSS SECTIONS ARE FOR GRADING DETAIL ONLY. SEE GRADING PLAN FOR ADITIONAL DETAIL, INCLUDING PROPOSED SLOPES. EXISTING AND PROPOSED UTILITIES AND DRAINAGE ARE NOT SHOWN.

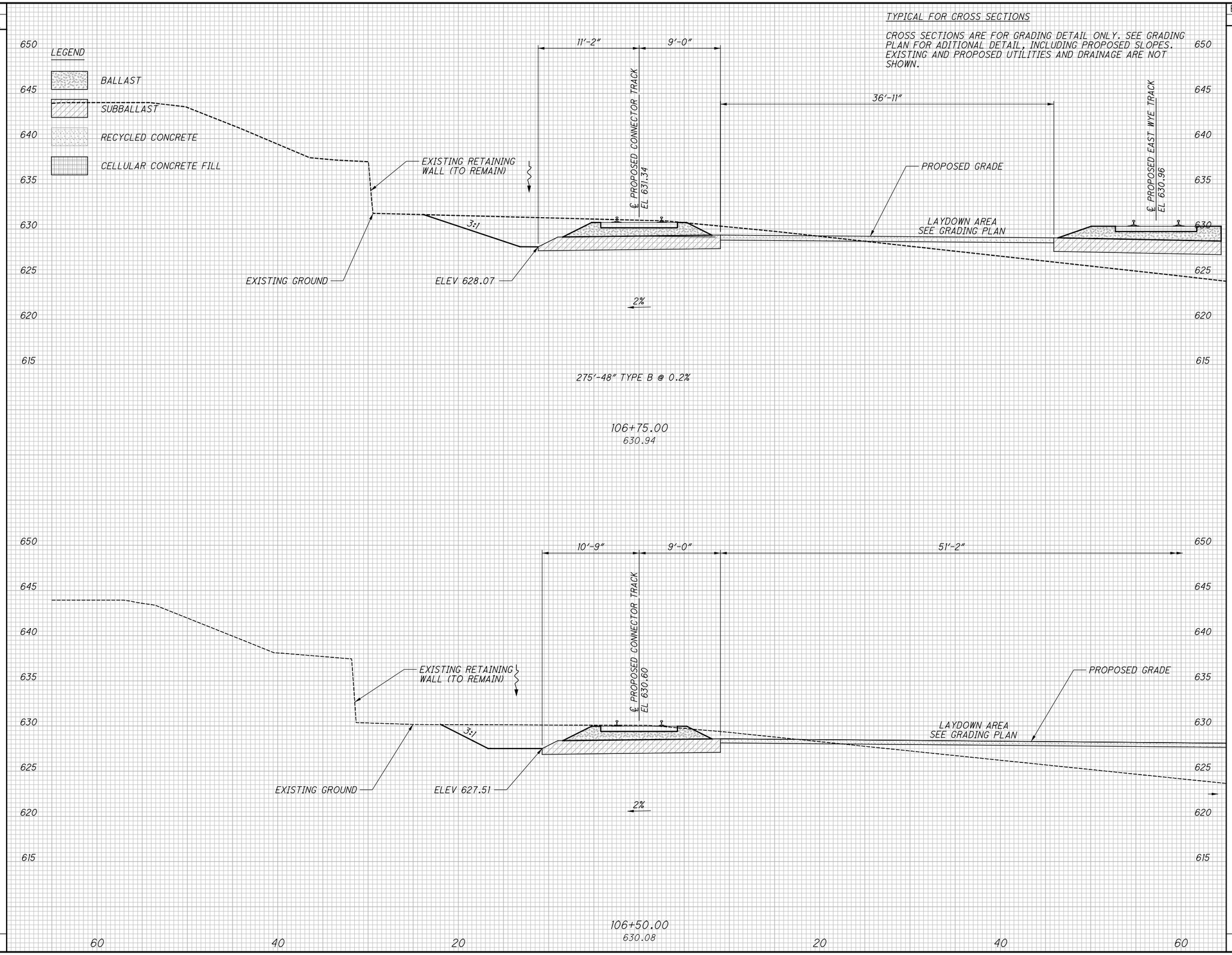

NO.	DATE	DESCRIPTION
0	2020-01-27	RFC ISSUE RECORD

CROSS SECTIONS - CONNECTOR TRACK
STA. 106+50.00 TO STA. 106+75.00
RECORD PLANS

CUY-IR490/SR010-2.09/19.28
RECORD PLANS

BU-17A - GCRTA WYE TRACK
...\Sheets\BU-17A\96833_XS017.dgn 3/31/2020 4:50:10 PM Jonathan.Shurilla

SEEDING	
END WIDTH	SQ. YDS.

END AREA		VOLUME	
CUT	FILL	CUT	FILL

CALCULATED CMC
CHECKED JW

TYPICAL FOR CROSS SECTIONS

CROSS SECTIONS ARE FOR GRADING DETAIL ONLY. SEE GRADING PLAN FOR ADITIONAL DETAIL, INCLUDING PROPOSED SLOPES. EXISTING AND PROPOSED UTILITIES AND DRAINAGE ARE NOT SHOWN.

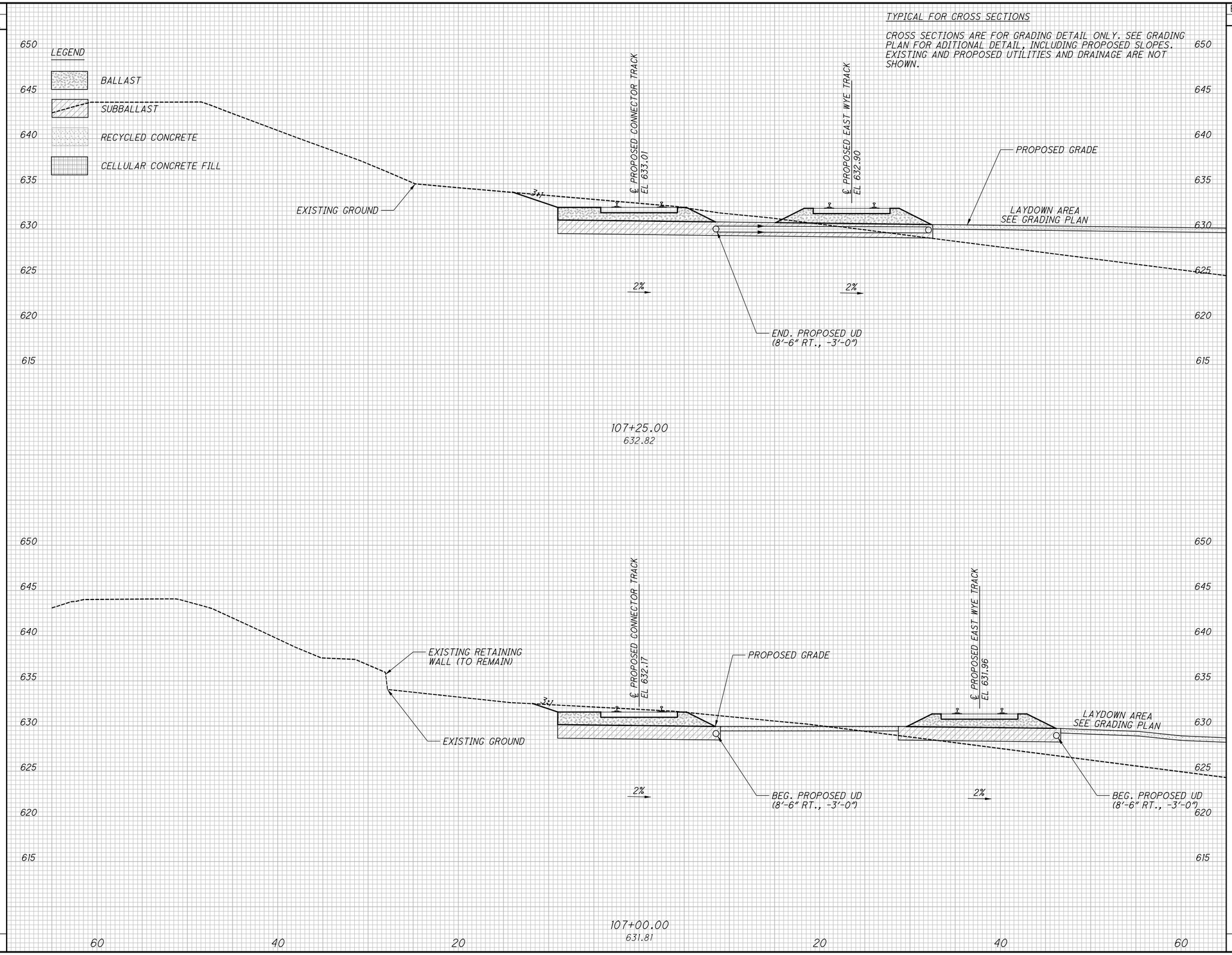

NO.	DATE	DESCRIPTION
0	2020-01-21	RFC ISSUE RECORD

CROSS SECTIONS - CONNECTOR TRACK
STA. 107+00.00 TO STA. 107+25.00

RECORD PLANS

CUY-IR490/SR010-2.09/19.28

RECORD PLANS

BU-17A - GCRTA WYE TRACK
...\Sheets\BU-17A\96833_XS017.dgn 3/31/2020 4:50:10 PM Jonathan.Shurilla

SEEDING	
END WIDTH	SQ. YDS.

STA. 107+95.93 BEGIN GRADING PER WALKWAY DETAIL ON SHEET 98

TYPICAL FOR CROSS SECTIONS

CROSS SECTIONS ARE FOR GRADING DETAIL ONLY. SEE GRADING PLAN FOR ADITIONAL DETAIL, INCLUDING PROPOSED SLOPES. EXISTING AND PROPOSED UTILITIES AND DRAINAGE ARE NOT SHOWN.

LEGEND

- BALLAST
- SUBBALLAST
- RECYCLED CONCRETE
- CELLULAR CONCRETE FILL

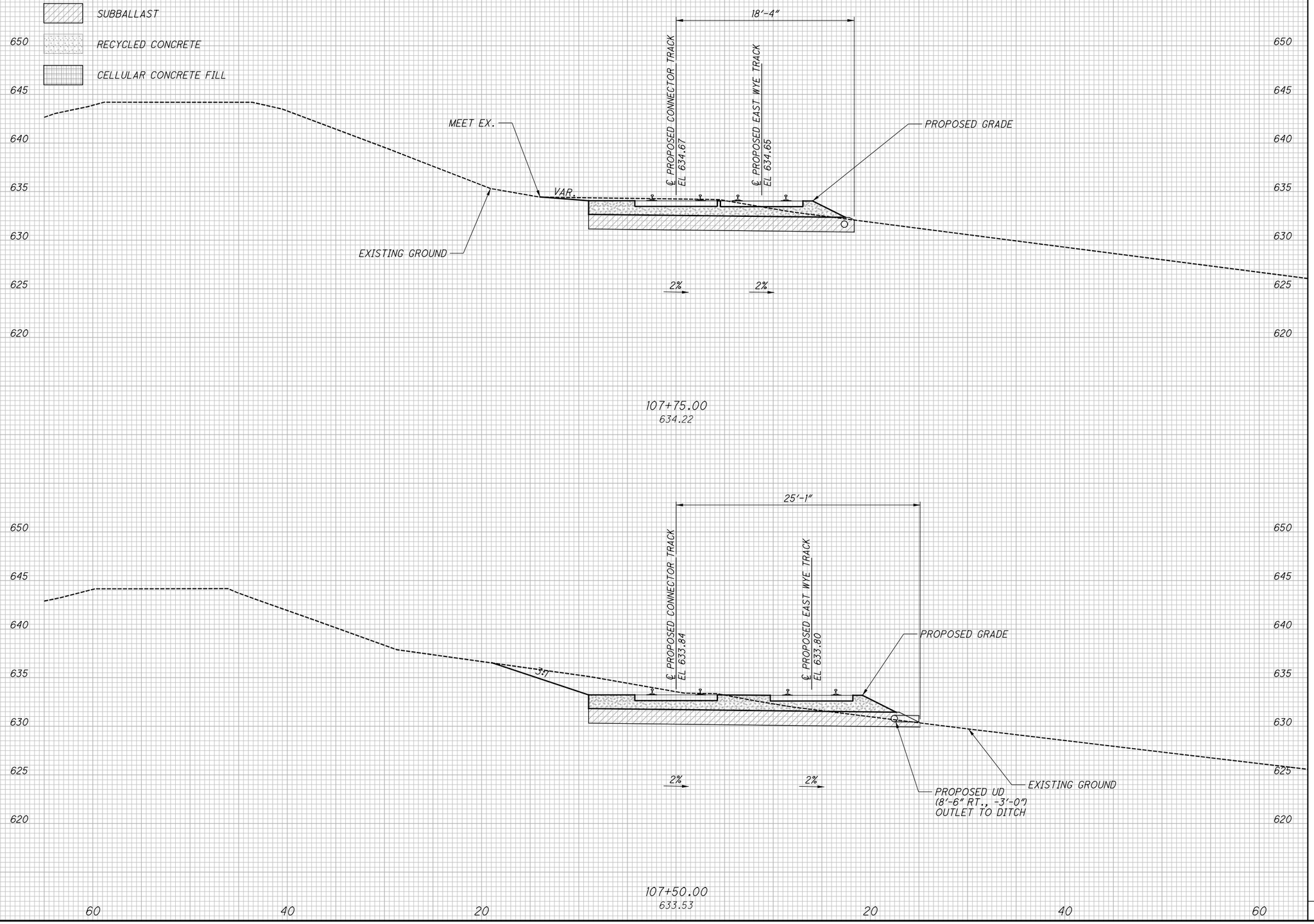

END AREA		VOLUME	
CUT	FILL	CUT	FILL

CALCULATED CMC
CHECKED JW

CROSS SECTIONS - CONNECTOR TRACK
STA. 107+50.00 TO STA. 107+75.00

RECORD PLANS

NO.	DATE	DESCRIPTION
0	2020-01-27	RFC ISSUE RECORD

CUY-IR490/SR010-2.09/19.28
RECORD PLANS

BU-17A - GCRTA WYE TRACK
...\Sheets\BU-17A\96833_XS017.dgn 3/31/2020 4:50:11 PM Jonathan.Shurilla

SEEDING	
END WIDTH	SQ. YDS.

END AREA		VOLUME	
CUT	FILL	CUT	FILL

CALCULATED CMC
CHECKED JW

TYPICAL FOR CROSS SECTIONS

CROSS SECTIONS ARE FOR GRADING DETAIL ONLY. SEE GRADING PLAN FOR ADITIONAL DETAIL, INCLUDING PROPOSED SLOPES. EXISTING AND PROPOSED UTILITIES AND DRAINAGE ARE NOT SHOWN.

LEGEND

- *BALLAST*
- *SUBBALLAST*
- *RECYCLED CONCRETE*
- *CELLULAR CONCRETE FILL*

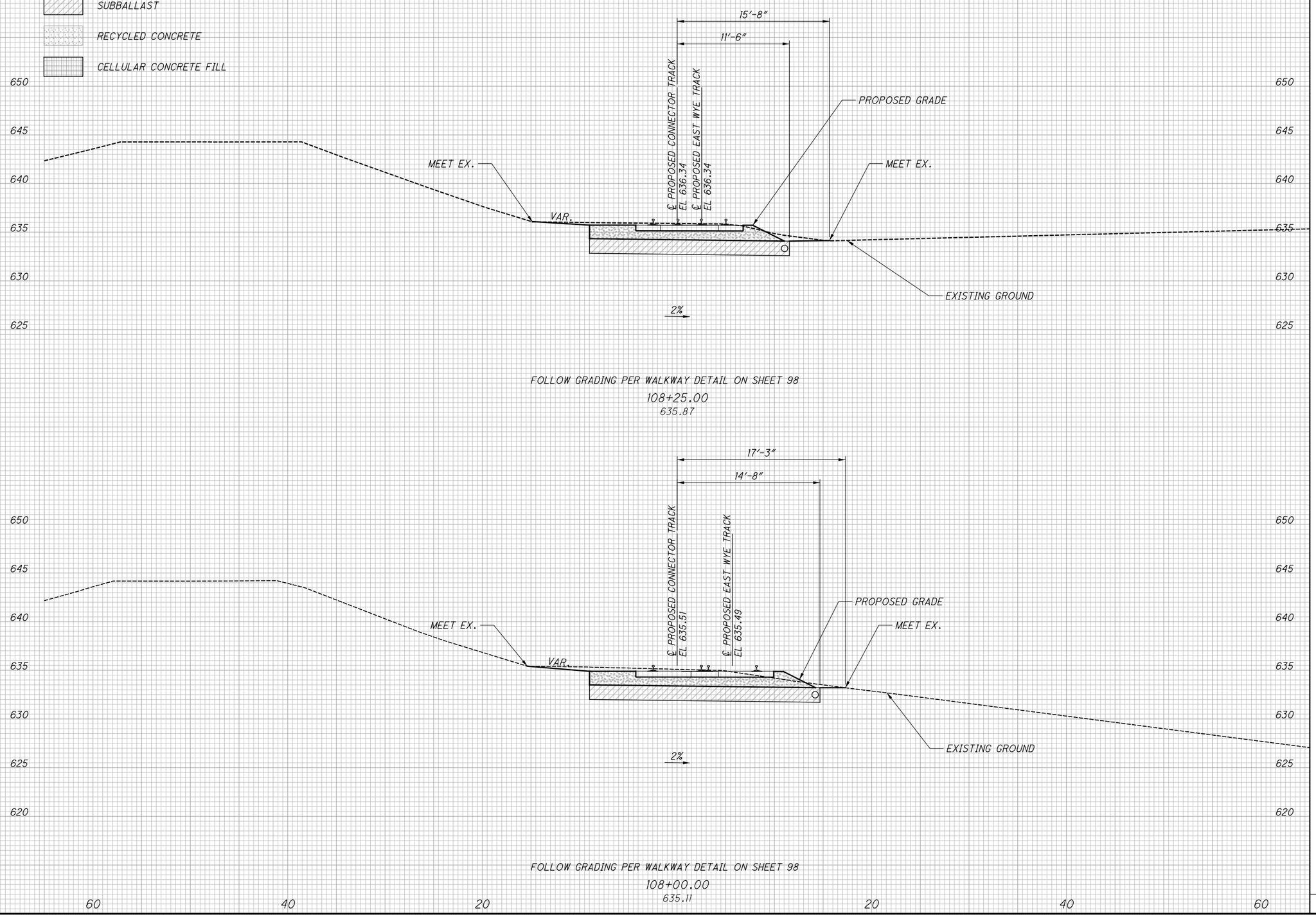

NO.	DATE	DESCRIPTION
0	2020-01-21	RFC ISSUE RECORD

CROSS SECTIONS - CONNECTOR TRACK
STA. 108+25.00 TO STA. 108+00.00

RECORD PLANS

CUY-IR490/SR010-2.09/19.28

RECORD PLANS

BU-17A - GCRTA WYE TRACK
...\Sheets\BU-17A\96833_XS017.dgn 3/31/2020 4:50:12 PM Jonathan.Shurilla

SEEDING	
END WIDTH	SQ. YDS.

STA. 108+94.43 END GRADING PER WALKWAY DETAIL ON SHEET 98

TYPICAL FOR CROSS SECTIONS

CROSS SECTIONS ARE FOR GRADING DETAIL ONLY. SEE GRADING PLAN FOR ADITIONAL DETAIL, INCLUDING PROPOSED SLOPES. EXISTING AND PROPOSED UTILITIES AND DRAINAGE ARE NOT SHOWN.

LEGEND

- BALLAST
- SUBBALLAST
- RECYCLED CONCRETE
- CELLULAR CONCRETE FILL

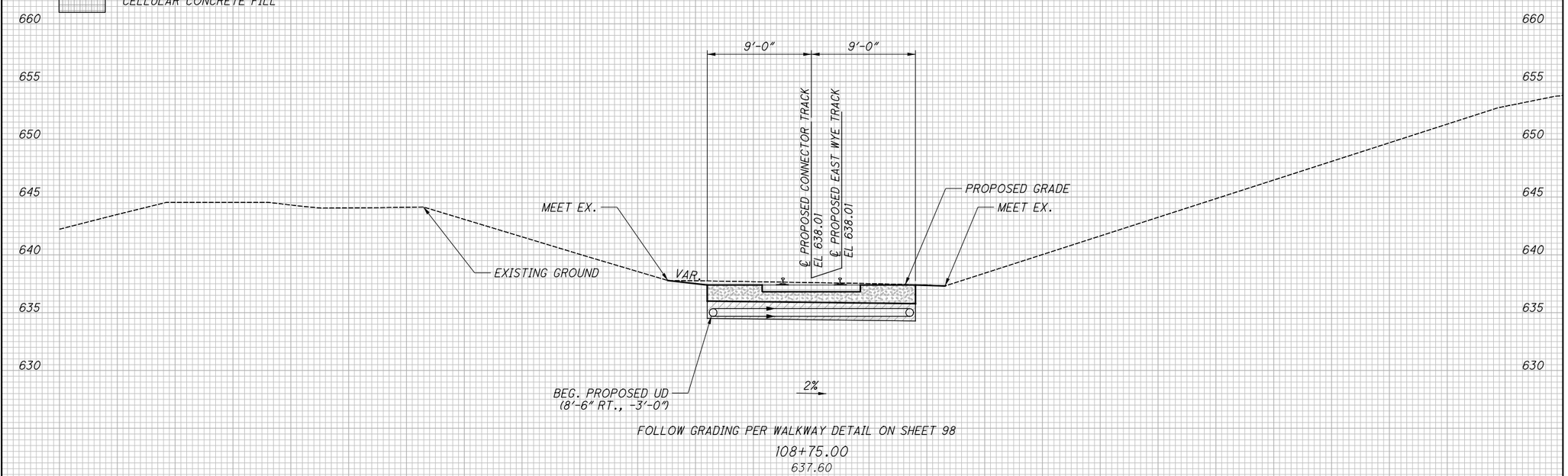

FOLLOW GRADING PER WALKWAY DETAIL ON SHEET 98

108+75.00

637.60

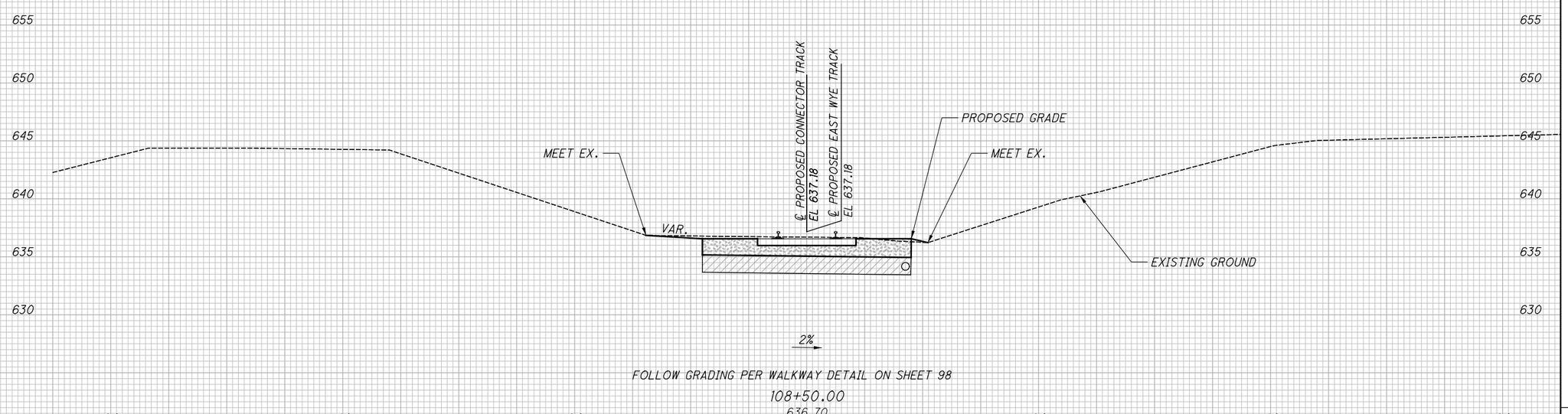

FOLLOW GRADING PER WALKWAY DETAIL ON SHEET 98

108+50.00

636.70

END AREA		VOLUME	
CUT	FILL	CUT	FILL

CALCULATED CMC
CHECKED JW

CROSS SECTIONS - CONNECTOR TRACK
STA. 108+50.00 TO STA. 108+75.00

RECORD PLANS

RECORD PLANS

NO.	DATE	DESCRIPTION
0	2020-01-27	RFC ISSUE RECORD

CUY-IR490/SR010-2.09/19.28

RECORD PLANS

BU-17A - GCRTA WYE TRACK
...\Sheets\BU-17A\96833_XS017.dgn 3/31/2020 4:50:13 PM Jonathan.Shurilla

SEEDING	
END WIDTH	SQ. YDS.

END AREA		VOLUME	
CUT	FILL	CUT	FILL

TYPICAL FOR CROSS SECTIONS

CROSS SECTIONS ARE FOR GRADING DETAIL ONLY. SEE GRADING PLAN FOR ADITIONAL DETAIL, INCLUDING PROPOSED SLOPES. EXISTING AND PROPOSED UTILITIES AND DRAINAGE ARE NOT SHOWN.

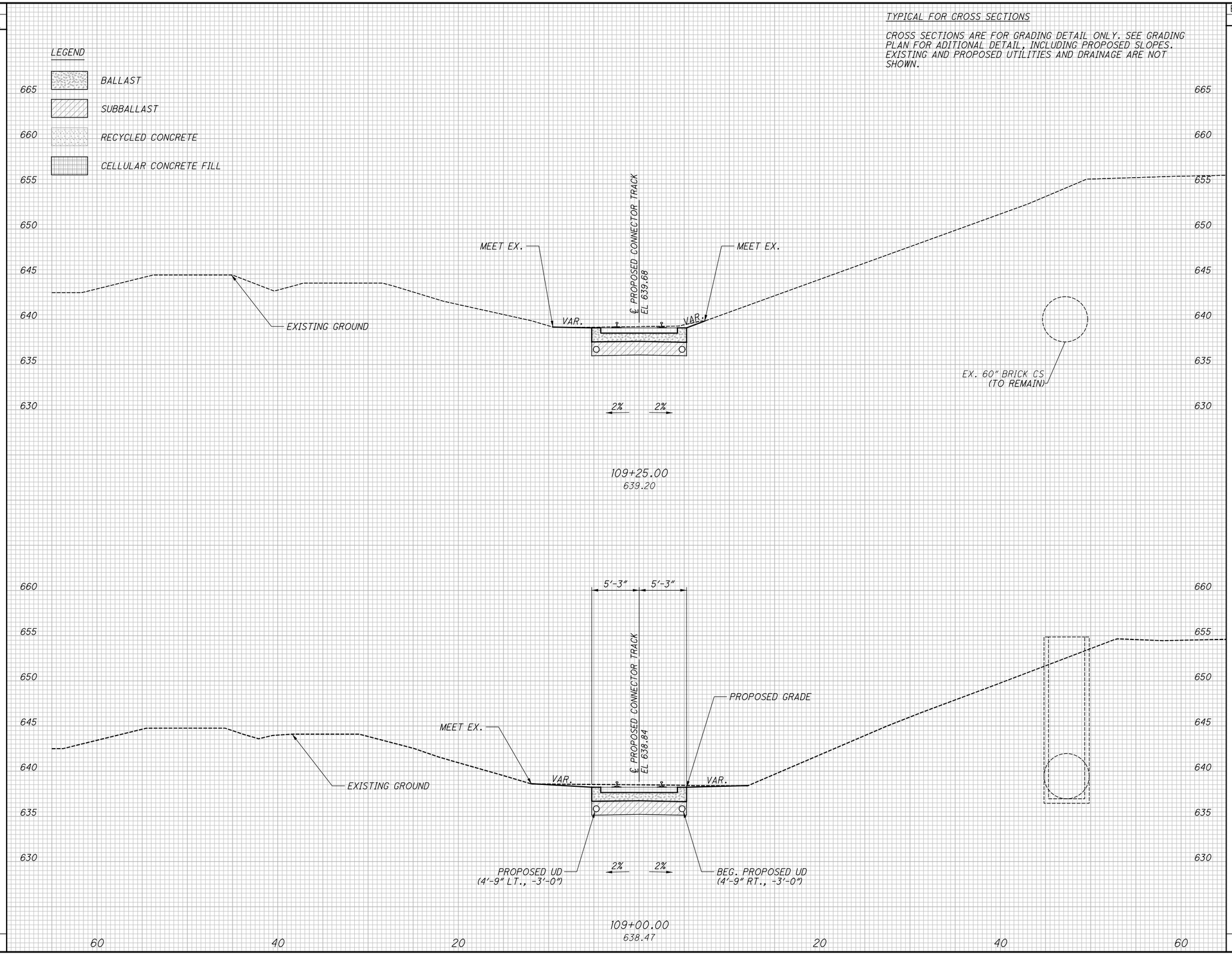

CALCULATED	CHECKED
CMC	JW

CROSS SECTIONS - CONNECTOR TRACK
STA. 109+00.00 TO STA. 109+25.00

RECORD PLANS

NO.	DATE	DESCRIPTION
0	2020-01-27	RFC ISSUE RECORD

CUY-IR490/SR010-2.09/19.28

RECORD PLANS

BU-17A - GCRTA WYE TRACK
...\Sheets\BU-17A\96833_XS017.dgn 3/31/2020 4:50:13 PM Jonathan.Shurilla

SEEDING	
END WIDTH	SQ. YDS.

END AREA		VOLUME	
CUT	FILL	CUT	FILL

CALCULATED CMC
CHECKED JW

TYPICAL FOR CROSS SECTIONS

CROSS SECTIONS ARE FOR GRADING DETAIL ONLY. SEE GRADING PLAN FOR ADITIONAL DETAIL, INCLUDING PROPOSED SLOPES. EXISTING AND PROPOSED UTILITIES AND DRAINAGE ARE NOT SHOWN.

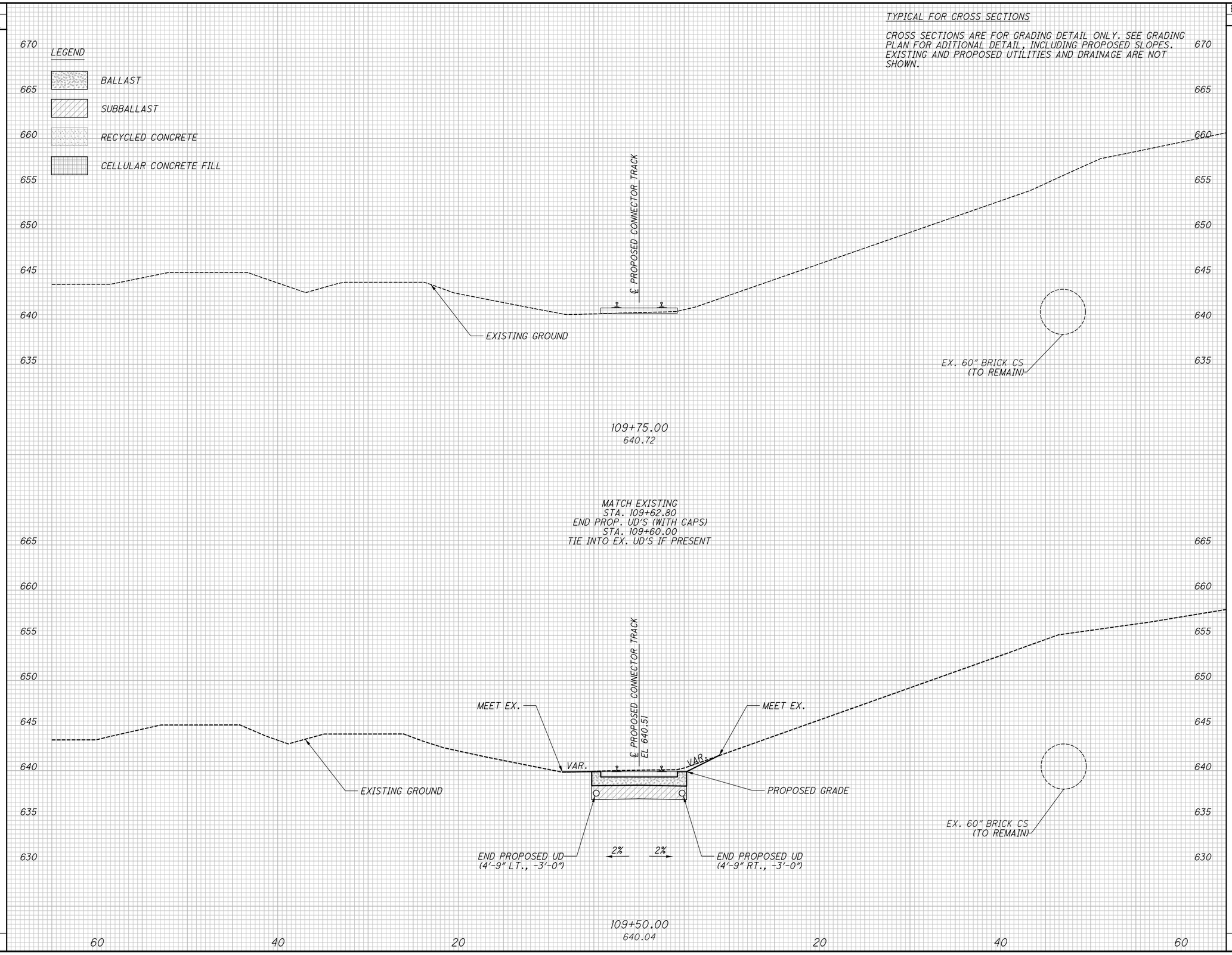

NO.	DATE	DESCRIPTION
0	2020-01-27	RFC ISSUE RECORD

CROSS SECTIONS - CONNECTOR TRACK
STA. 109+50.00 TO STA. 109+75.00

RECORD PLANS

CUY-IR490/SR010-2.09/19.28

RECORD PLANS

BU-17A - GCRTA WYE TRACK
...\Sheets\BU-17A\96833_XS017.dgn 3/31/2020 4:50:14 PM Jonathan.Shurilla

SEEDING	
END WIDTH	SQ. YDS.

END AREA		VOLUME	
CUT	FILL	CUT	FILL

CALCULATED CMC
CHECKED JW

TYPICAL FOR CROSS SECTIONS

CROSS SECTIONS ARE FOR GRADING DETAIL ONLY. SEE GRADING PLAN FOR ADITIONAL DETAIL, INCLUDING PROPOSED SLOPES. EXISTING AND PROPOSED UTILITIES AND DRAINAGE ARE NOT SHOWN.

BALLAST, SUBBALLAST AND DITCH SIDE SLOPES; AND DITCH BACK SLOPES ARE 2:1 NORMAL TO ℄ ADJACENT TRACK UNLESS NOTED OTHERWISE.

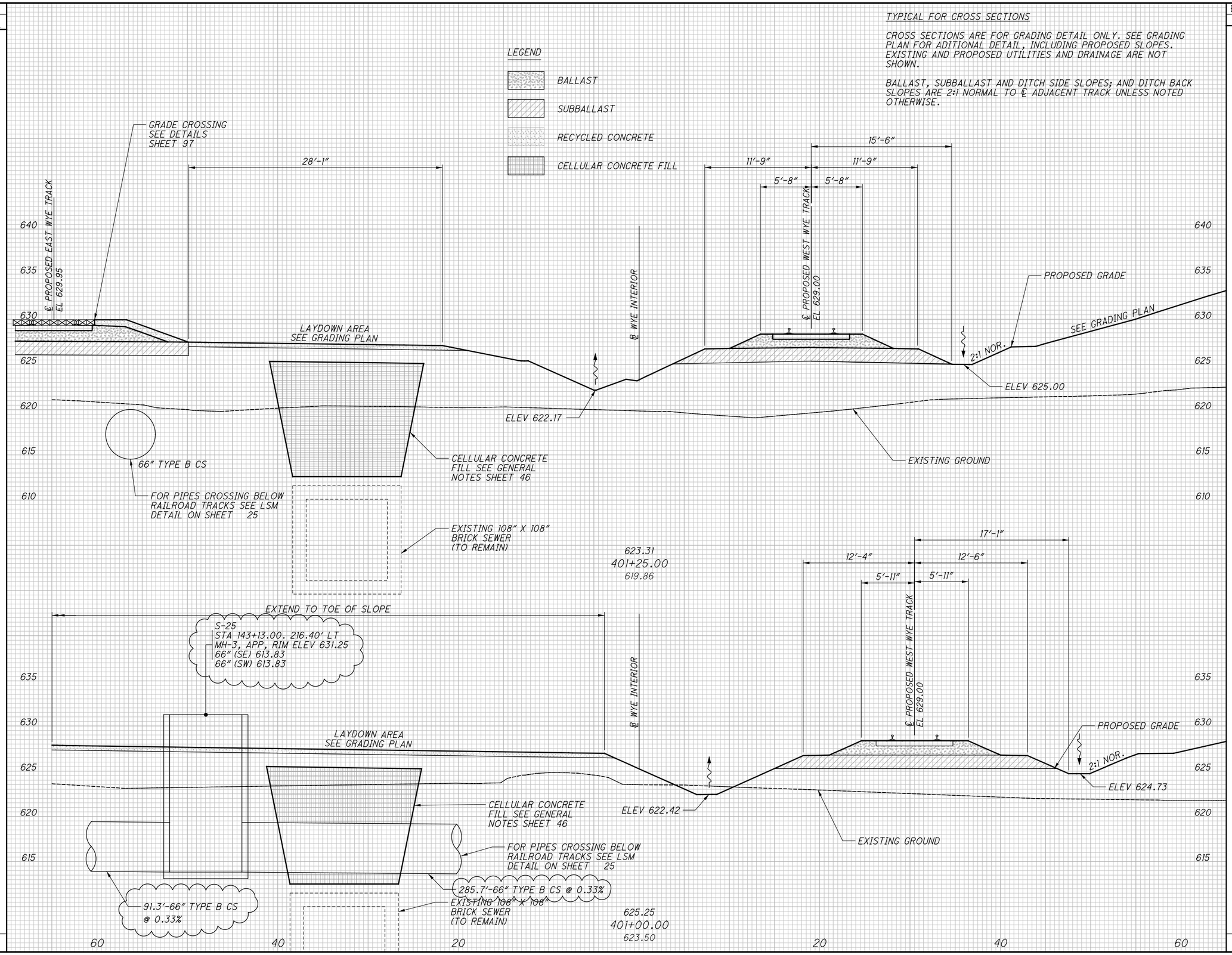

NO.	DATE	DESCRIPTION
1	2024-09-10	RECORD DRAWINGS
0	2020-01-27	RFC

ISSUE RECORD

CROSS SECTIONS - WYE INTERIOR
STA. 401+00.00 TO STA. 401+25.00

RECORD PLANS

RECORD PLANS

CUY-IR490/SR010-2.09/19.28

RECORD PLANS

BU-17A - GCRTA WYE TRACK
...\Sheets\BU-17A\96833_XS017.dgn 12/4/2024 10:07:24 AM Rohit.Bk

SEEDING	
END WIDTH	SQ. YDS.

END AREA		VOLUME	
CUT	FILL	CUT	FILL

TYPICAL FOR CROSS SECTIONS

CROSS SECTIONS ARE FOR GRADING DETAIL ONLY. SEE GRADING PLAN FOR ADITIONAL DETAIL, INCLUDING PROPOSED SLOPES. EXISTING AND PROPOSED UTILITIES AND DRAINAGE ARE NOT SHOWN.

BALLAST, SUBBALLAST AND DITCH SIDE SLOPES; AND DITCH BACK SLOPES ARE 2:1 NORMAL TO ℄ ADJACENT TRACK UNLESS NOTED OTHERWISE.

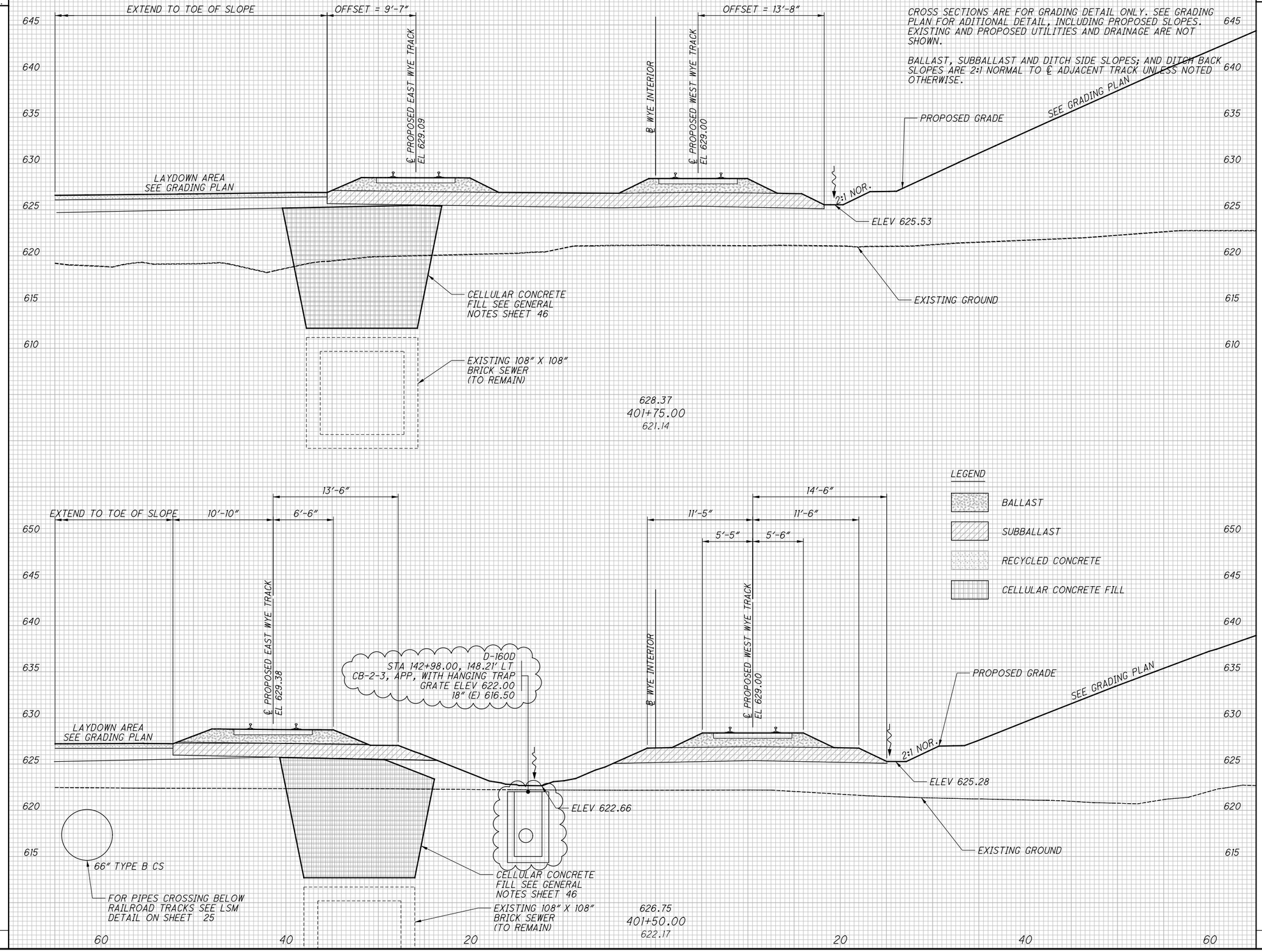

CALCULATED	CHECKED
CMC	JW

CROSS SECTIONS - WYE INTERIOR
STA. 401+50.00 TO STA. 401+75.00

RECORD PLANS

RECORD PLANS

NO.	DATE	DESCRIPTION
1	2024-09-10	RECORD DRAWINGS
0	2020-01-27	RFC

ISSUE RECORD

CUY-IR490/SR010-2.09/19.28

RECORD PLANS

BU-17A - GCRTA WYE TRACK
...\Sheets\BU-17A\96833_XS017.dgn 12/4/2024 4:55:13 PM Gregory.Hetler

SEEDING	
END WIDTH	SQ. YDS.

LEGEND

- BALLAST
- SUBBALLAST
- RECYCLED CONCRETE
- CELLULAR CONCRETE FILL

TYPICAL FOR CROSS SECTIONS

CROSS SECTIONS ARE FOR GRADING DETAIL ONLY. SEE GRADING PLAN FOR ADITIONAL DETAIL, INCLUDING PROPOSED SLOPES. EXISTING AND PROPOSED UTILITIES AND DRAINAGE ARE NOT SHOWN.

BALLAST, SUBBALLAST AND DITCH SIDE SLOPES; AND DITCH BACK SLOPES ARE 2:1 NORMAL TO ℄ ADJACENT TRACK UNLESS NOTED OTHERWISE.

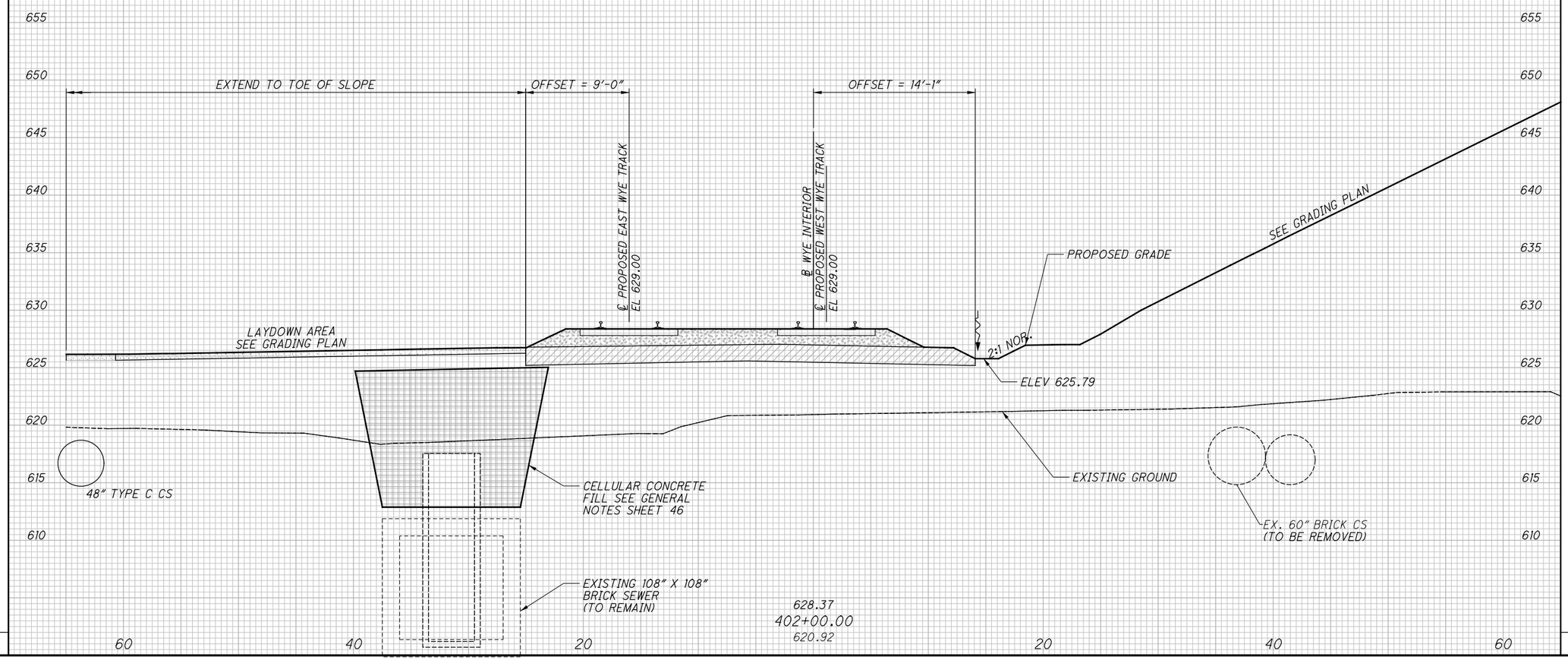

END AREA		VOLUME	
CUT	FILL	CUT	FILL

CALCULATED CMC
CHECKED JW

CROSS SECTIONS - WYE INTERIOR
STA. 402+00.00

RECORD PLANS

NO.	DATE	DESCRIPTION
0	2020-01-27	RFC ISSUE RECORD

CUY-IR490/SR010-2.09/19.28
RECORD PLANS

BU-17A - GCRTA WYE TRACK
...\Sheets\BU-17A\96833_XS017.dgn 3/31/2020 4:50:16 PM Jonathan.Shurilla

SEEDING	
END WIDTH	SQ. YDS.

END AREA		VOLUME	
CUT	FILL	CUT	FILL

LEGEND

- BALLAST
- SUBBALLAST
- RECYCLED CONCRETE
- CELLULAR CONCRETE FILL

TYPICAL FOR CROSS SECTIONS

CROSS SECTIONS ARE FOR GRADING DETAIL ONLY. SEE GRADING PLAN FOR ADITIONAL DETAIL, INCLUDING PROPOSED SLOPES. EXISTING AND PROPOSED UTILITIES AND DRAINAGE ARE NOT SHOWN.

BALLAST, SUBBALLAST AND DITCH SIDE SLOPES; AND DITCH BACK SLOPES ARE 2:1 NORMAL TO ℄ ADJACENT TRACK UNLESS NOTED OTHERWISE.

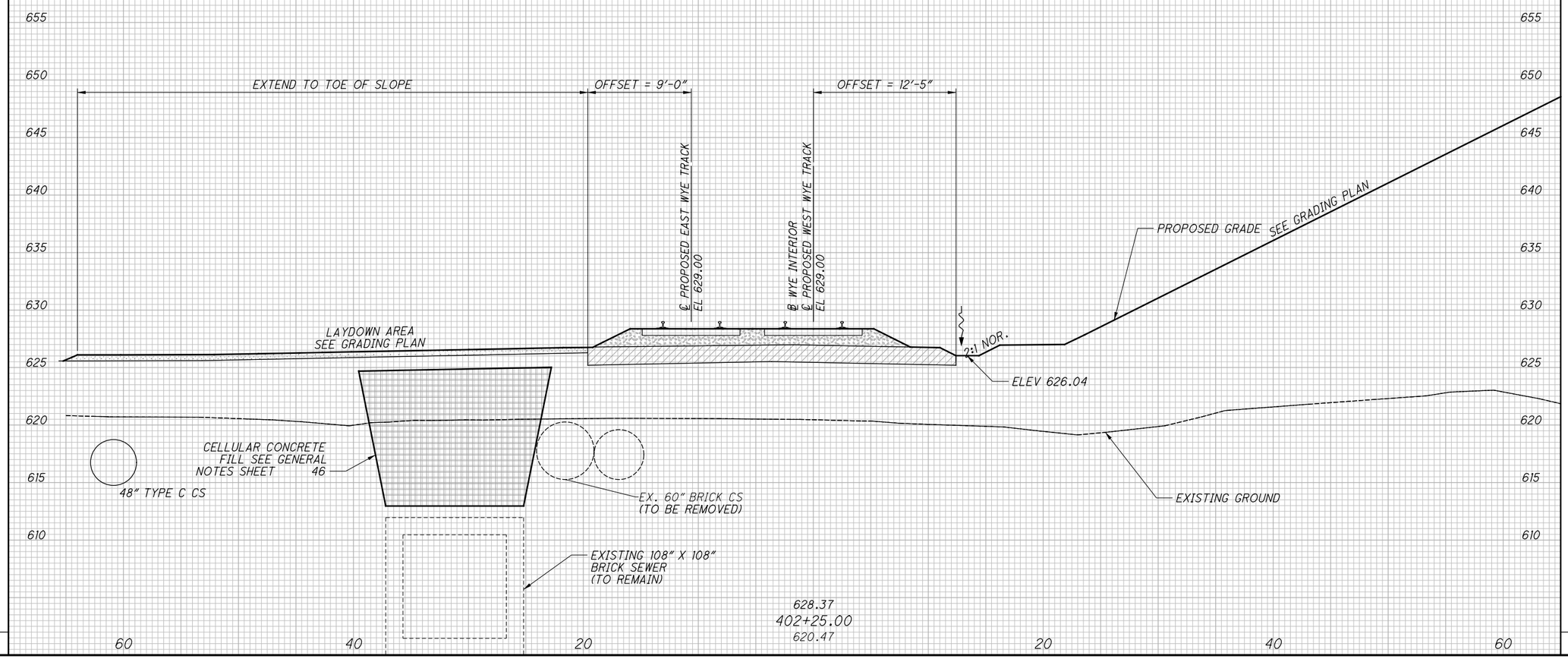

CALCULATED CMC
CHECKED JW

CROSS SECTIONS - WYE INTERIOR
STA. 402+25.00

RECORD PLANS

NO.	DATE	DESCRIPTION
0	2020-01-27	RFC ISSUE RECORD

CUY-IR490/SR010-2.09/19.28

RECORD PLANS

BU-17A - GCRTA WYE TRACK
...\Sheets\BU-17A\96833_XS017.dgn 3/31/2020 4:50:17 PM Jonathan.Shurilla

SEEDING	
END WIDTH	SQ. YDS.

END AREA		VOLUME	
CUT	FILL	CUT	FILL

CALCULATED CMC
CHECKED JW

TYPICAL FOR CROSS SECTIONS

CROSS SECTIONS ARE FOR GRADING DETAIL ONLY. SEE GRADING PLAN FOR ADITIONAL DETAIL, INCLUDING PROPOSED SLOPES. EXISTING AND PROPOSED UTILITIES AND DRAINAGE ARE NOT SHOWN.

BALLAST, SUBBALLAST AND DITCH SIDE SLOPES; AND DITCH BACK SLOPES ARE 2:1 NORMAL TO ℄ ADJACENT TRACK UNLESS NOTED OTHERWISE.

LEGEND

- *BALLAST*
- *SUBBALLAST*
- *RECYCLED CONCRETE*
- *CELLULAR CONCRETE FILL*

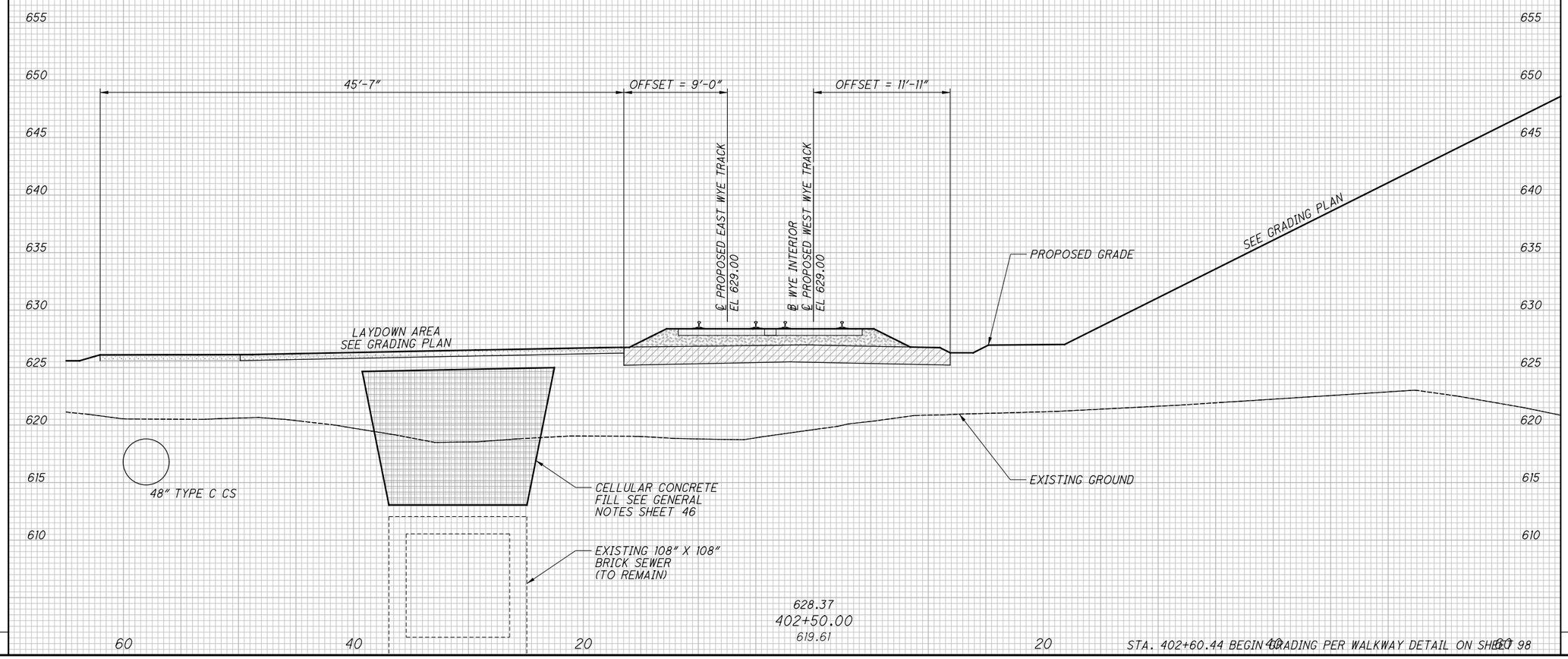

NO.	DATE	DESCRIPTION
0	2020-01-27	RFC ISSUE RECORD

CROSS SECTIONS - WYE INTERIOR
STA. 402+50.00

RECORD PLANS

CUY-IR490/SR010-2.09/19.28

RECORD PLANS

BU-17A - GCRTA WYE TRACK
...\Sheets\BU-17A\96833_XS017.dgn 3/31/2020 4:50:18 PM Jonathan.Shurilla

SEEDING	
END WIDTH	SQ. YDS.

END AREA		VOLUME	
CUT	FILL	CUT	FILL

CALCULATED CMC
CHECKED JW

TYPICAL FOR CROSS SECTIONS

CROSS SECTIONS ARE FOR GRADING DETAIL ONLY. SEE GRADING PLAN FOR ADITIONAL DETAIL, INCLUDING PROPOSED SLOPES. EXISTING AND PROPOSED UTILITIES AND DRAINAGE ARE NOT SHOWN.

BALLAST, SUBBALLAST AND DITCH SIDE SLOPES; AND DITCH BACK SLOPES ARE 2:1 NORMAL TO ℄ ADJACENT TRACK UNLESS NOTED OTHERWISE.

LEGEND

- *BALLAST*
- *SUBBALLAST*
- *RECYCLED CONCRETE*
- *CELLULAR CONCRETE FILL*

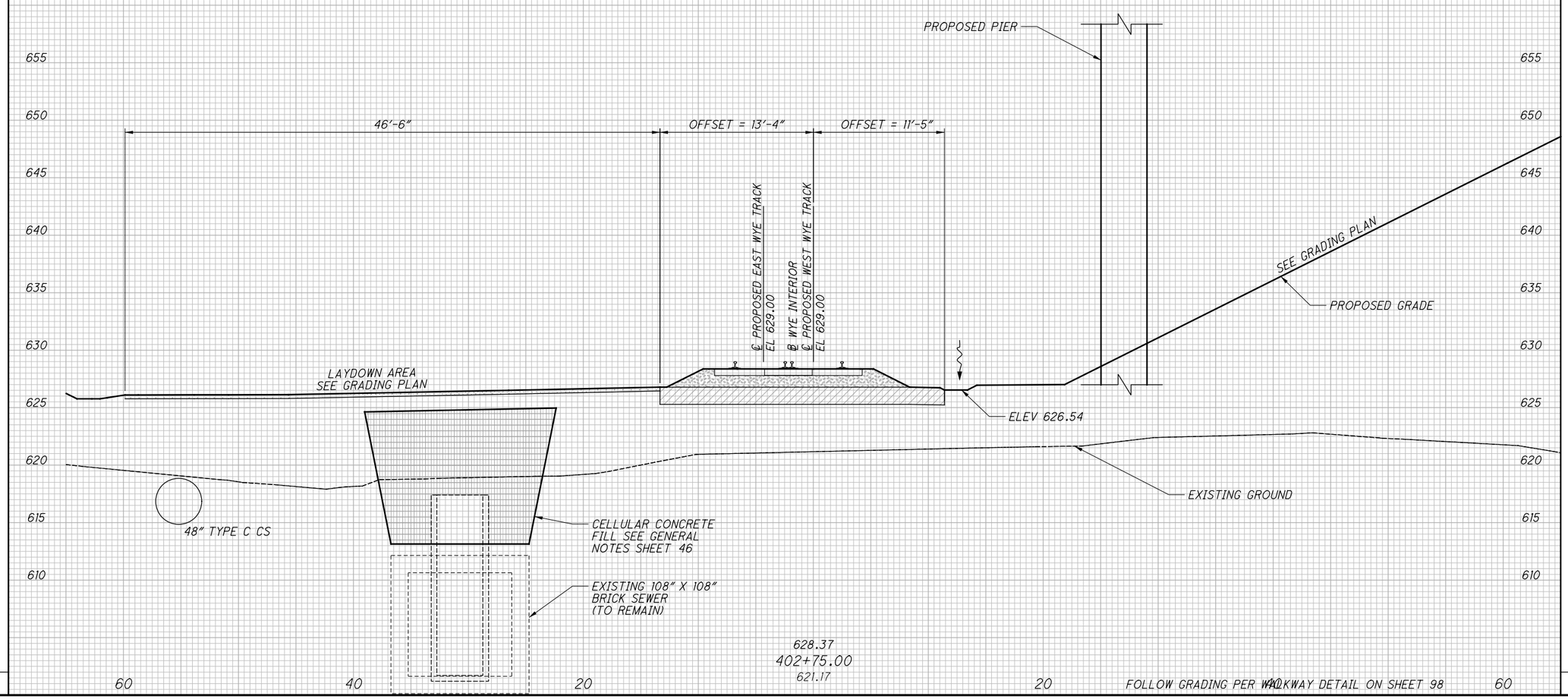

CROSS SECTIONS - WYE INTERIOR
STA. 402+75.00

RECORD PLANS

RECORD PLANS

NO.	DATE	DESCRIPTION
0	2020-01-27	RFC

ISSUE RECORD

CUY-IR490/SR010-2.09/19.28

RECORD PLANS

BU-17A - GCRTA WYE TRACK
...\Sheets\BU-17A\96833_XS017.dgn 3/31/2020 4:50:19 PM Jonathan.Shurilla

SEEDING	
END WIDTH	SQ. YDS.

LEGEND

- BALLAST
- SUBBALLAST
- RECYCLED CONCRETE
- CELLULAR CONCRETE FILL

TYPICAL FOR CROSS SECTIONS

CROSS SECTIONS ARE FOR GRADING DETAIL ONLY. SEE GRADING PLAN FOR ADITIONAL DETAIL, INCLUDING PROPOSED SLOPES. EXISTING AND PROPOSED UTILITIES AND DRAINAGE ARE NOT SHOWN.

BALLAST, SUBBALLAST AND DITCH SIDE SLOPES; AND DITCH BACK SLOPES ARE 2:1 NORMAL TO ℄ ADJACENT TRACK UNLESS NOTED OTHERWISE.

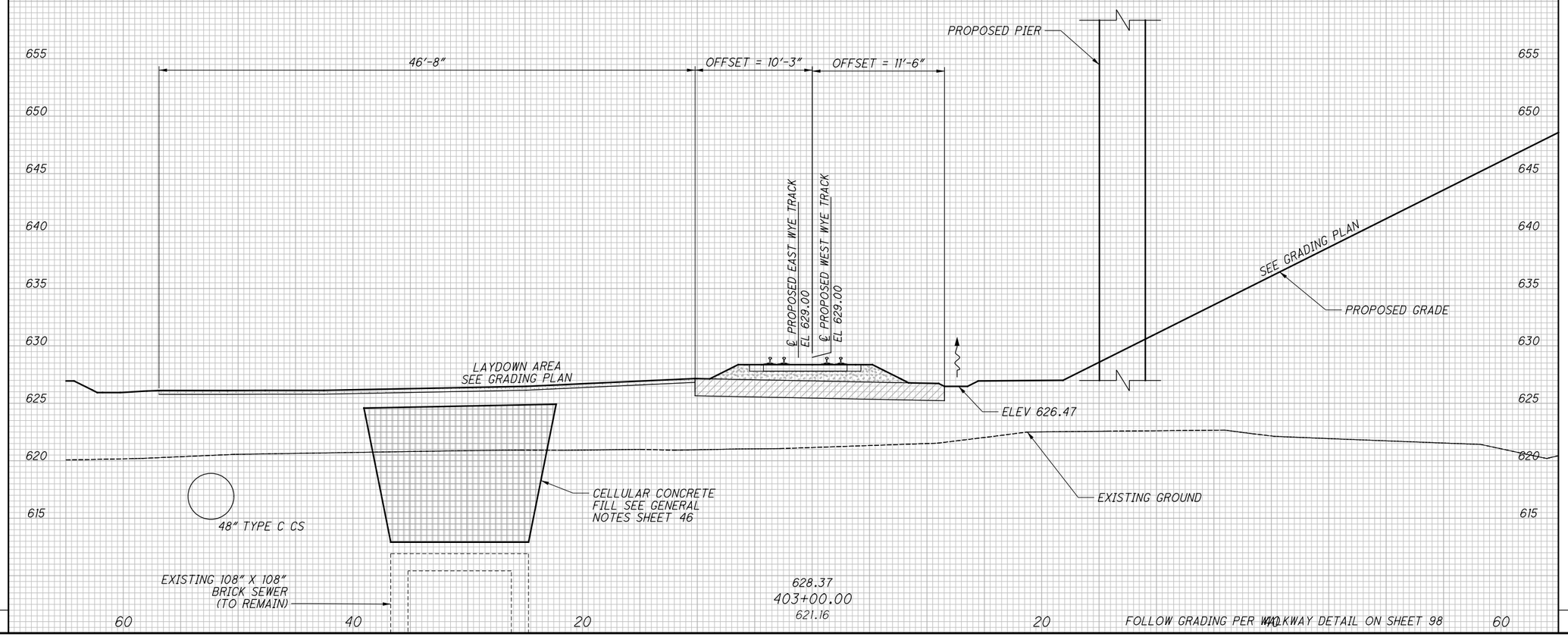

END AREA		VOLUME	
CUT	FILL	CUT	FILL

CALCULATED CMC
CHECKED JW

CROSS SECTIONS - WYE INTERIOR
STA. 403+00.00

RECORD PLANS

NO.	DATE	DESCRIPTION
0	2020-01-27	RFC ISSUE RECORD

CUY-IR490/SR010-2.09/19.28
RECORD PLANS

BU-17A - GCRTA WYE TRACK
...\Sheets\BU-17A\96833_XS017.dgn 3/31/2020 4:50:19 PM Jonathan.Shurilla

SEEDING	
END WIDTH	SQ. YDS.

END AREA		VOLUME	
CUT	FILL	CUT	FILL

CALCULATED CMC
CHECKED JW

TYPICAL FOR CROSS SECTIONS

CROSS SECTIONS ARE FOR GRADING DETAIL ONLY. SEE GRADING PLAN FOR ADITIONAL DETAIL, INCLUDING PROPOSED SLOPES. EXISTING AND PROPOSED UTILITIES AND DRAINAGE ARE NOT SHOWN.

BALLAST, SUBBALLAST AND DITCH SIDE SLOPES; AND DITCH BACK SLOPES ARE 2:1 NORMAL TO ℄ ADJACENT TRACK UNLESS NOTED OTHERWISE.

LEGEND

- *BALLAST*
- *SUBBALLAST*
- *RECYCLED CONCRETE*
- *CELLULAR CONCRETE FILL*

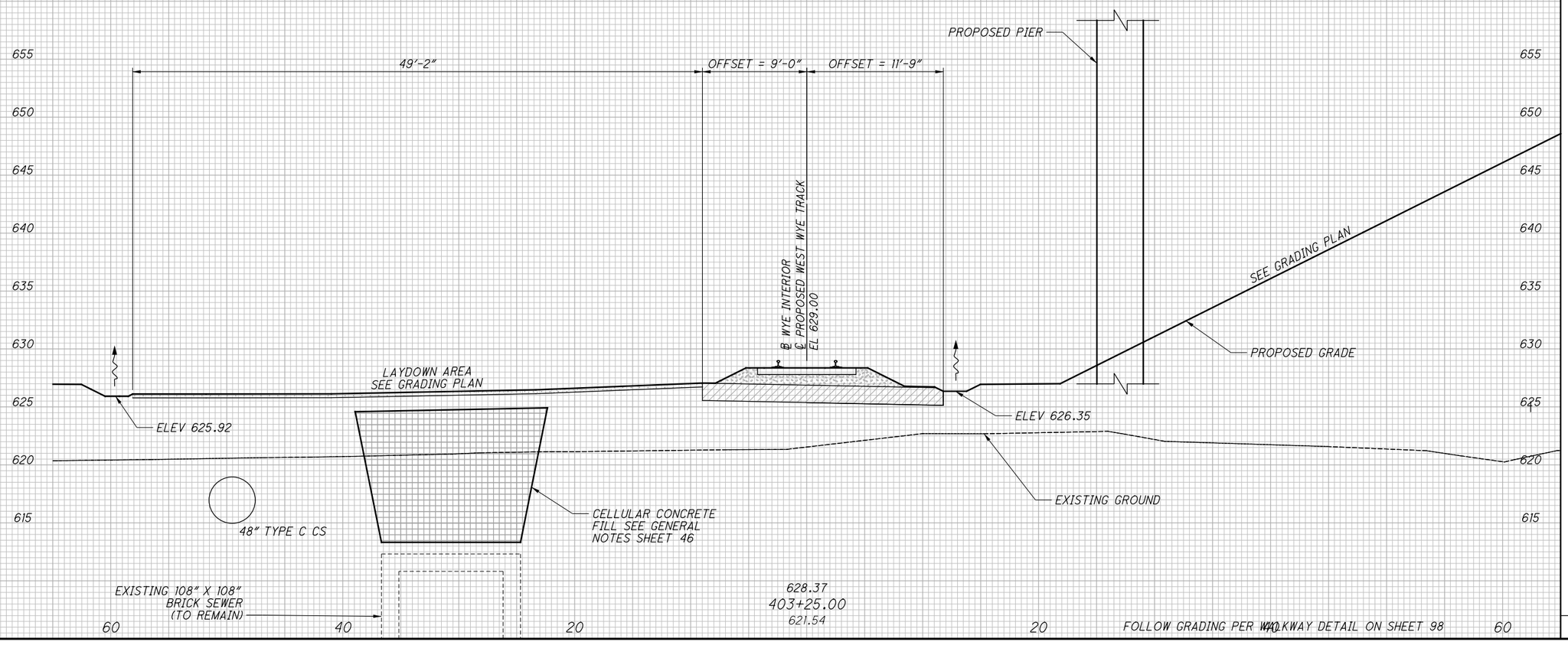

NO.	DATE	DESCRIPTION
0	2020-01-27	RFC ISSUE RECORD

CROSS SECTIONS - WYE INTERIOR
STA. 403+25.00

RECORD PLANS

CUY-IR490/SR010-2.09/19.28

RECORD PLANS

BU-17A - GCRTA WYE TRACK
...\Sheets\BU-17A\96833_XS017.dgn 3/31/2020 4:50:20 PM Jonathan.Shurilla

SEEDING	
END WIDTH	SQ. YDS.

END AREA		VOLUME	
CUT	FILL	CUT	FILL

CALCULATED CMC
CHECKED JW

TYPICAL FOR CROSS SECTIONS

CROSS SECTIONS ARE FOR GRADING DETAIL ONLY. SEE GRADING PLAN FOR ADITIONAL DETAIL, INCLUDING PROPOSED SLOPES. EXISTING AND PROPOSED UTILITIES AND DRAINAGE ARE NOT SHOWN.

BALLAST, SUBBALLAST AND DITCH SIDE SLOPES; AND DITCH BACK SLOPES ARE 2:1 NORMAL TO ℄ ADJACENT TRACK UNLESS NOTED OTHERWISE.

LEGEND

- *BALLAST*
- *SUBBALLAST*
- *RECYCLED CONCRETE*
- *CELLULAR CONCRETE FILL*

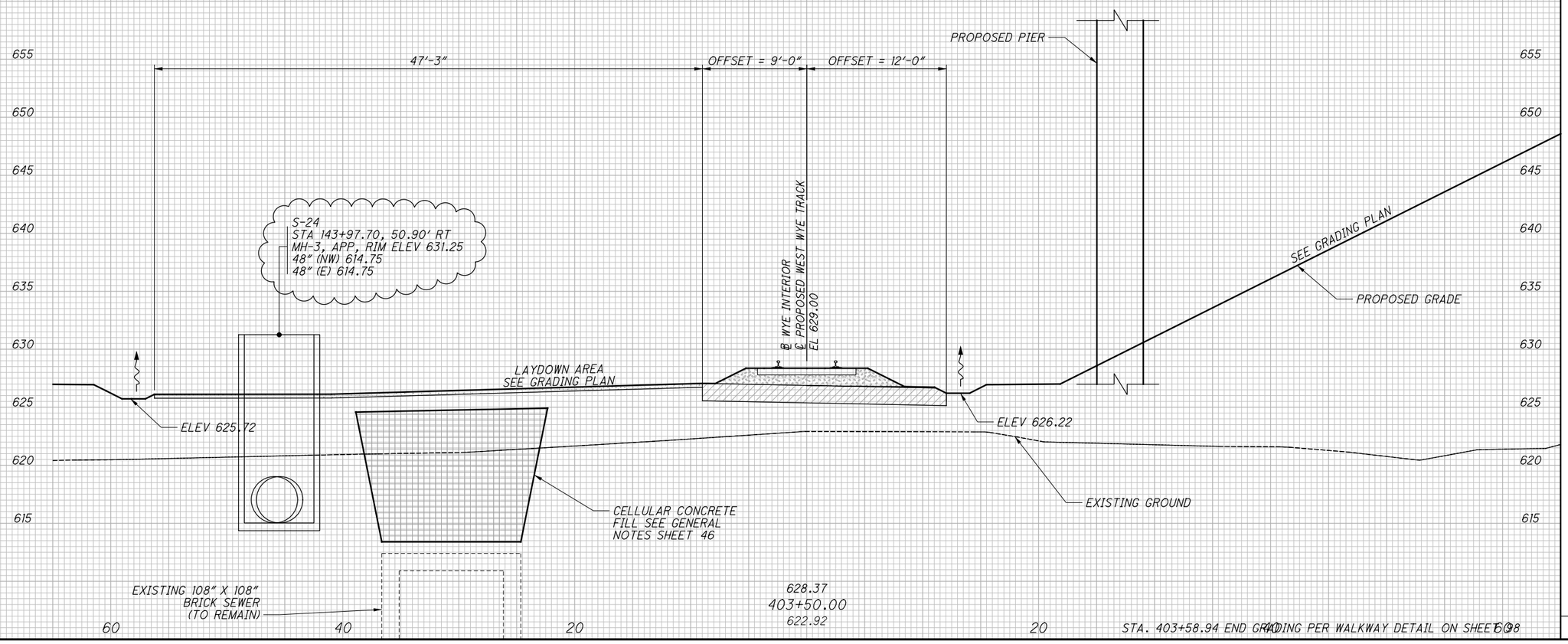

CROSS SECTIONS - WYE INTERIOR
STA. 403+50.00

RECORD PLANS

RECORD PLANS

NO.	DATE	DESCRIPTION
1	2024-09-10	RECORD DRAWINGS
0	2020-01-27	RFC

ISSUE RECORD

CUY-IR490/SR010-2.09/19.28

RECORD PLANS

BU-17A - GCRTA WYE TRACK
...\Sheets\BU-17A\96833_XS017.dgn 12/4/2024 10:07:27 AM Rohit.Bk

SEEDING	
END WIDTH	SQ. YDS.

END AREA		VOLUME	
CUT	FILL	CUT	FILL

CALCULATED CMC
CHECKED JW

TYPICAL FOR CROSS SECTIONS

CROSS SECTIONS ARE FOR GRADING DETAIL ONLY. SEE GRADING PLAN FOR ADITIONAL DETAIL, INCLUDING PROPOSED SLOPES. EXISTING AND PROPOSED UTILITIES AND DRAINAGE ARE NOT SHOWN.

BALLAST, SUBBALLAST AND DITCH SIDE SLOPES; AND DITCH BACK SLOPES ARE 2:1 NORMAL TO ℄ ADJACENT TRACK UNLESS NOTED OTHERWISE.

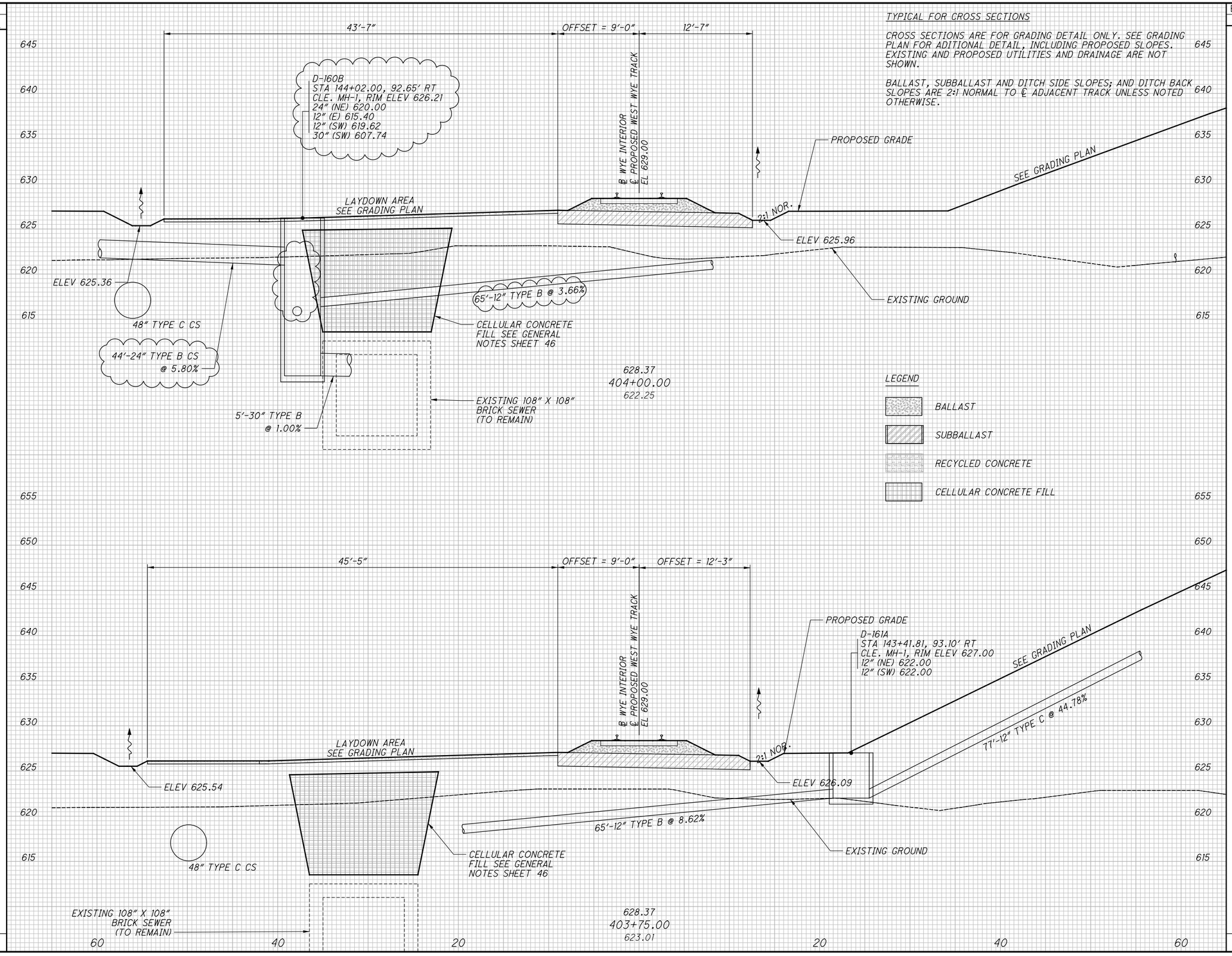

NO.	DATE	DESCRIPTION
1	2024-09-10	RECORD DRAWINGS
0	2020-01-27	RFC

ISSUE RECORD

CROSS SECTIONS - WYE INTERIOR
STA. 403+75.00 TO STA. 404+00.00

RECORD PLANS

CUY-IR490/SR010-2.09/19.28

RECORD PLANS

BU-17A - GCRTA WYE TRACK
...\Sheets\BU-17A\96833_XS017.dgn 12/4/2024 10:07:27 AM Rohit.Bk

SEEDING	
END WIDTH	SQ. YDS.

END AREA		VOLUME	
CUT	FILL	CUT	FILL

CALCULATED CMC
CHECKED JW

TYPICAL FOR CROSS SECTIONS

CROSS SECTIONS ARE FOR GRADING DETAIL ONLY. SEE GRADING PLAN FOR ADITIONAL DETAIL, INCLUDING PROPOSED SLOPES. EXISTING AND PROPOSED UTILITIES AND DRAINAGE ARE NOT SHOWN.

BALLAST, SUBBALLAST AND DITCH SIDE SLOPES; AND DITCH BACK SLOPES ARE 2:1 NORMAL TO ℄ ADJACENT TRACK UNLESS NOTED OTHERWISE.

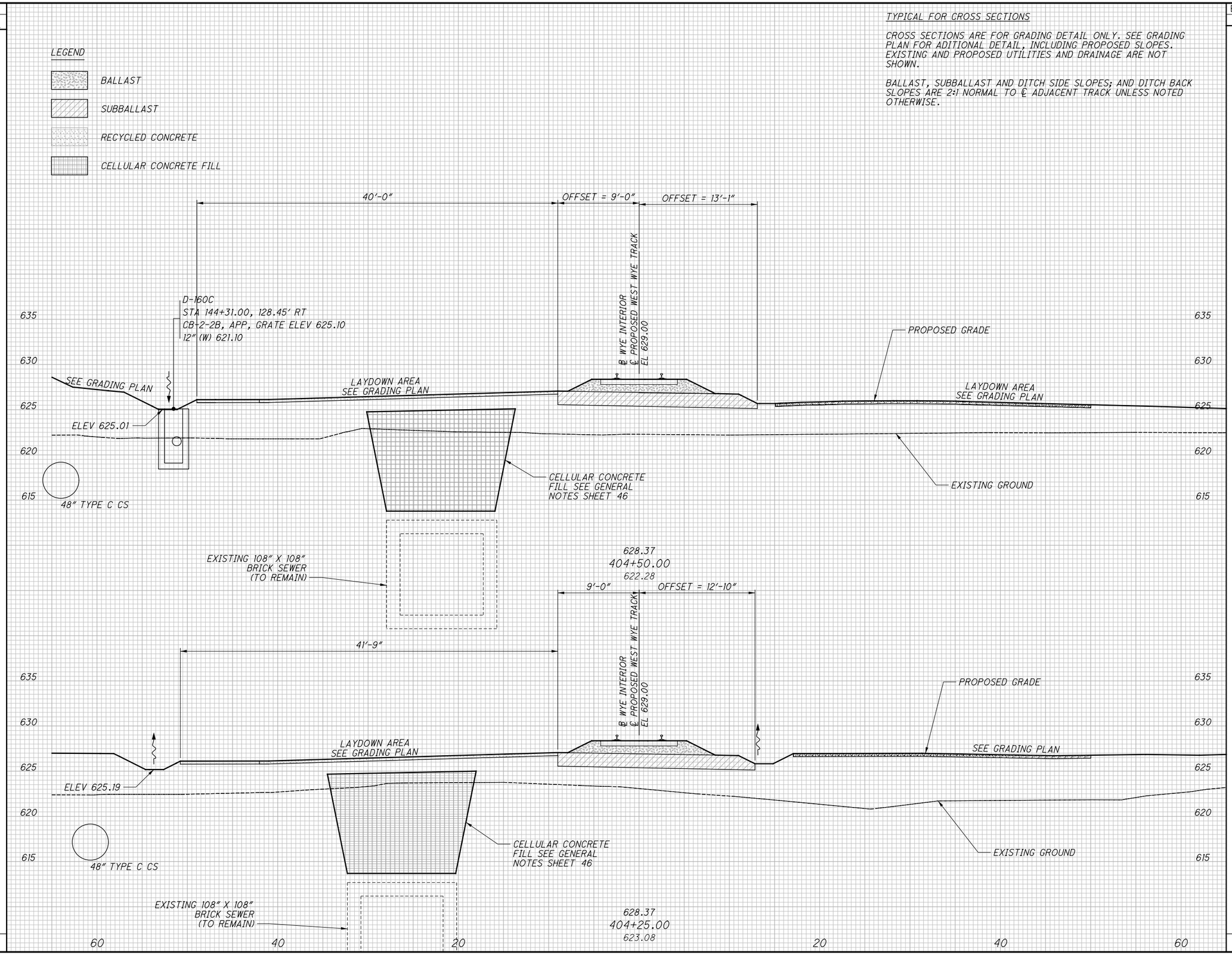

CROSS SECTIONS - WYE INTERIOR
STA. 404+25.00 TO STA. 404+50.00

RECORD PLANS

RECORD PLANS

NO.	DATE	DESCRIPTION
0	2020-01-27	RFC ISSUE RECORD

CUY-IR490/SR010-2.09/19.28

RECORD PLANS

BU-17A - GCRTA WYE TRACK
...\Sheets\BU-17A\96833_XS017.dgn 3/31/2020 4:50:22 PM Jonathan.Shurilla

SEEDING	
END WIDTH	SQ. YDS.

END AREA		VOLUME	
CUT	FILL	CUT	FILL

CALCULATED CMC
CHECKED JW

TYPICAL FOR CROSS SECTIONS

CROSS SECTIONS ARE FOR GRADING DETAIL ONLY. SEE GRADING PLAN FOR ADITIONAL DETAIL, INCLUDING PROPOSED SLOPES. EXISTING AND PROPOSED UTILITIES AND DRAINAGE ARE NOT SHOWN.

BALLAST, SUBBALLAST AND DITCH SIDE SLOPES; AND DITCH BACK SLOPES ARE 2:1 NORMAL TO ℄ ADJACENT TRACK UNLESS NOTED OTHERWISE.

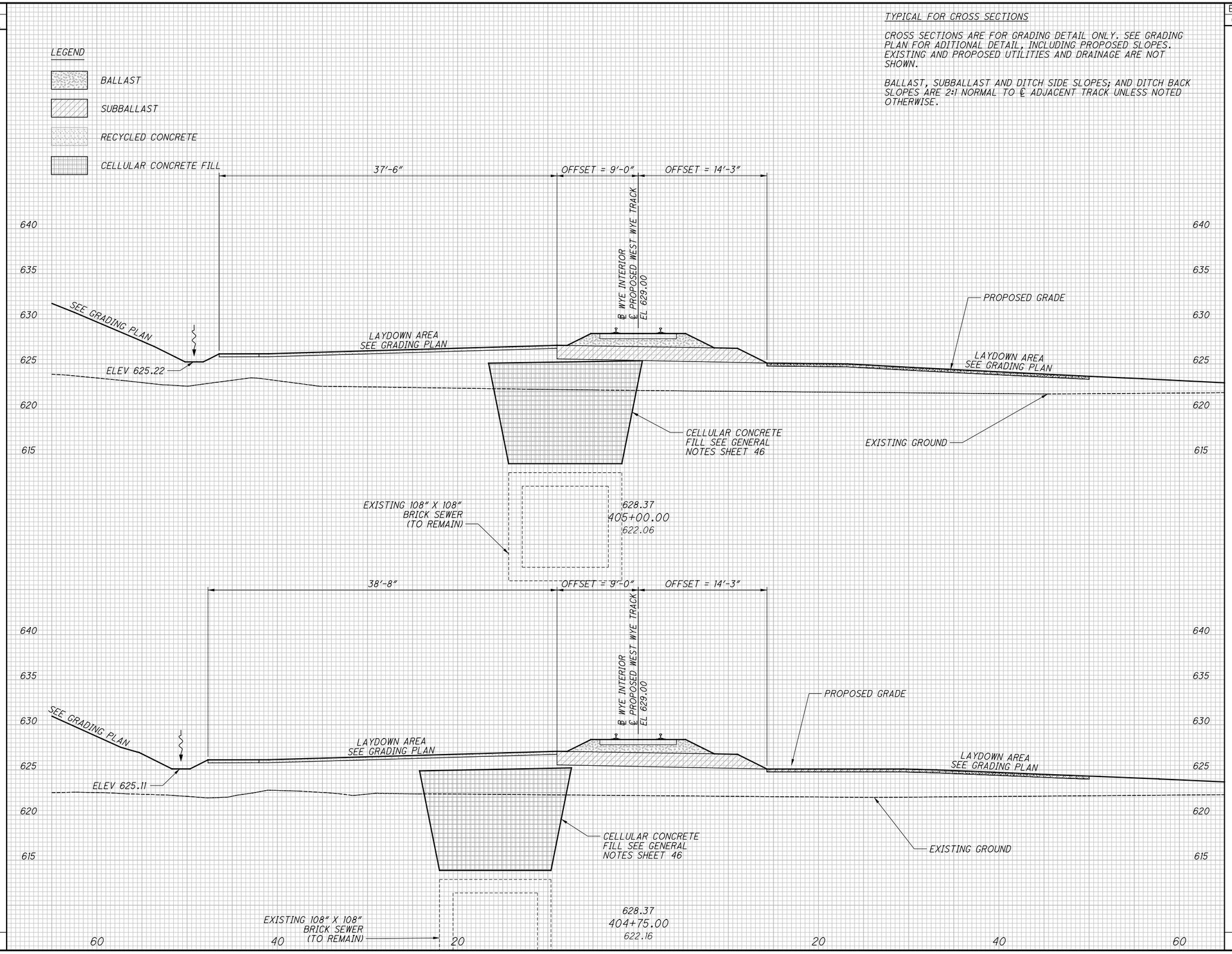

CROSS SECTIONS - WYE INTERIOR
STA. 404+75.00 TO STA. 405+00.00
RECORD PLANS

RECORD PLANS

CUY-IR490/SR010-2.09/19.28
RECORD PLANS

NO.	DATE	DESCRIPTION
0	2020-01-27	RFC ISSUE RECORD

BU-17A - GCRTA WYE TRACK
...\Sheets\BU-17A\96833_XS017.dgn 3/31/2020 4:50:23 PM Jonathan.Shurilla

SEEDING	
END WIDTH	SQ. YDS.

END AREA		VOLUME	
CUT	FILL	CUT	FILL

CALCULATED CMC
CHECKED JW

TYPICAL FOR CROSS SECTIONS

CROSS SECTIONS ARE FOR GRADING DETAIL ONLY. SEE GRADING PLAN FOR ADITIONAL DETAIL, INCLUDING PROPOSED SLOPES. EXISTING AND PROPOSED UTILITIES AND DRAINAGE ARE NOT SHOWN.

BALLAST, SUBBALLAST AND DITCH SIDE SLOPES; AND DITCH BACK SLOPES ARE 2:1 NORMAL TO ℄ ADJACENT TRACK UNLESS NOTED OTHERWISE.

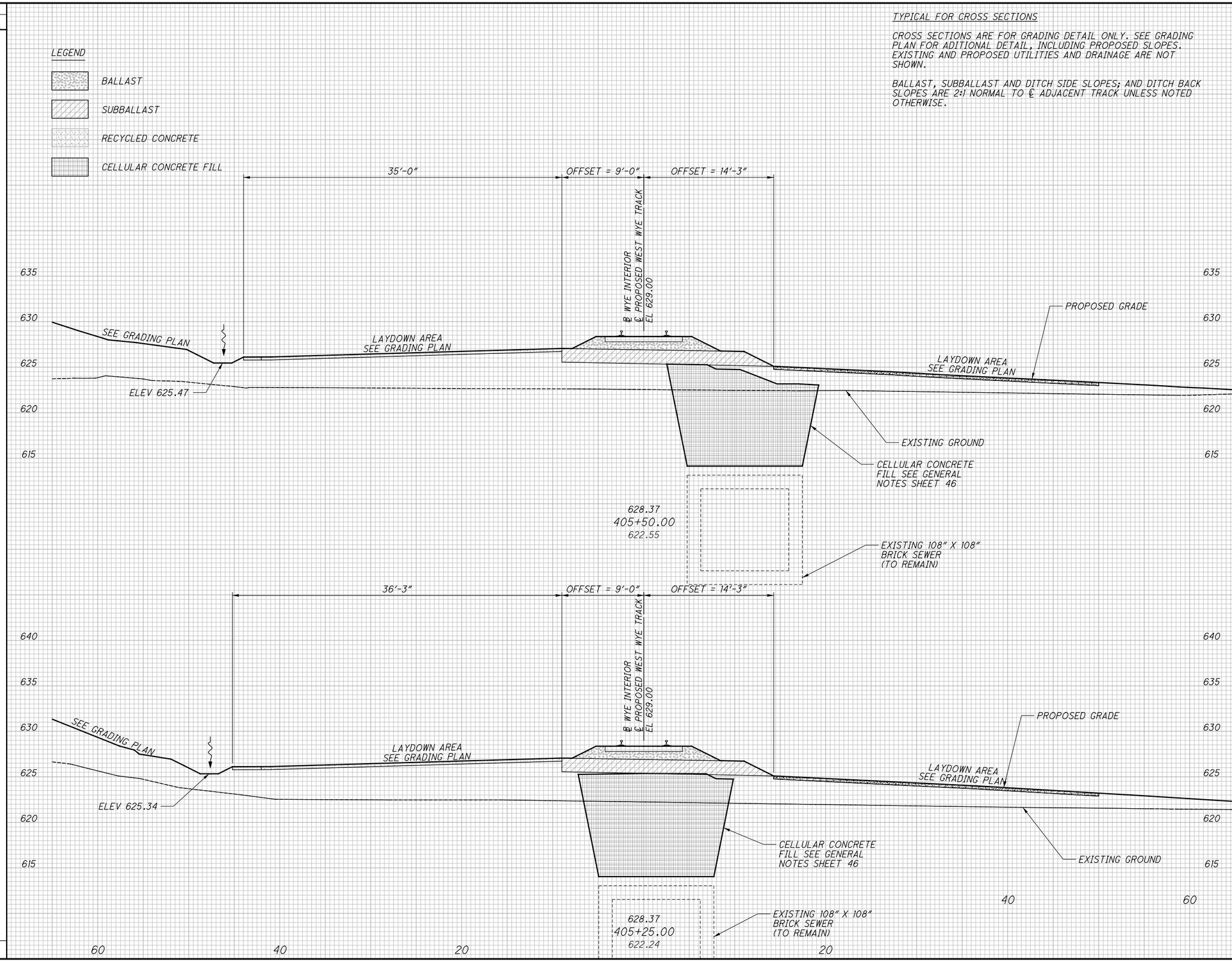

CROSS SECTIONS - WYE INTERIOR
STA. 405+25.00 TO STA. 405+50.00

RECORD PLANS

RECORD PLANS

NO.	DATE	DESCRIPTION
0	2020-01-27	RFC ISSUE RECORD

CUY-IR490/SR010-2.09/19.28

RECORD PLANS

BU-17A - GCRTA WYE TRACK
...\Sheets\BU-17A\96833_XS017.dgn 3/31/2020 4:50:24 PM Jonathan.Shurilla

SEEDING	
END WIDTH	SQ. YDS.

END AREA		VOLUME	
CUT	FILL	CUT	FILL

CALCULATED CMC
CHECKED JW

TYPICAL FOR CROSS SECTIONS

CROSS SECTIONS ARE FOR GRADING DETAIL ONLY. SEE GRADING PLAN FOR ADITIONAL DETAIL, INCLUDING PROPOSED SLOPES. EXISTING AND PROPOSED UTILITIES AND DRAINAGE ARE NOT SHOWN.

BALLAST, SUBBALLAST AND DITCH SIDE SLOPES; AND DITCH BACK SLOPES ARE 2:1 NORMAL TO ℄ ADJACENT TRACK UNLESS NOTED OTHERWISE.

LEGEND

- *BALLAST*
- *SUBBALLAST*
- *RECYCLED CONCRETE*
- *CELLULAR CONCRETE FILL*

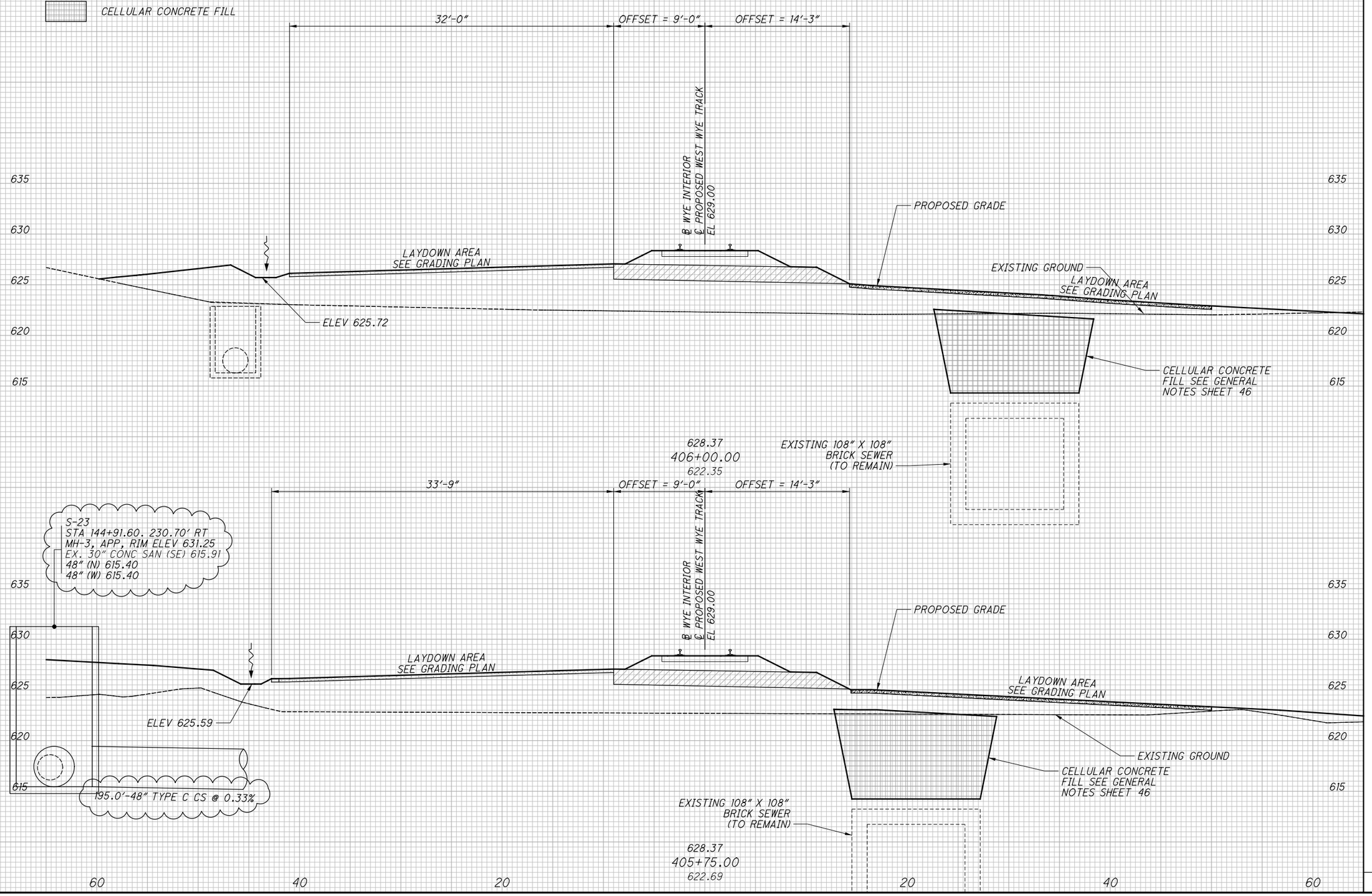

NO.	DATE	DESCRIPTION
1	2024-09-10	RECORD DRAWINGS
0	2020-01-27	RFC

ISSUE RECORD

CROSS SECTIONS - WYE INTERIOR
STA. 405+75.00 TO STA. 406+00.00

RECORD PLANS

CUY-IR490/SR010-2.09/19.28

RECORD PLANS

BU-17A - GCRTA WYE TRACK
...\Sheets\BU-17A\96833_XS017.dgn 12/4/2024 10:07:29 AM Rohit.Bk

SEEDING	
END WIDTH	SQ. YDS.

END AREA		VOLUME	
CUT	FILL	CUT	FILL

CALCULATED CMC
CHECKED JW

TYPICAL FOR CROSS SECTIONS

CROSS SECTIONS ARE FOR GRADING DETAIL ONLY. SEE GRADING PLAN FOR ADITIONAL DETAIL, INCLUDING PROPOSED SLOPES. EXISTING AND PROPOSED UTILITIES AND DRAINAGE ARE NOT SHOWN.

BALLAST, SUBBALLAST AND DITCH SIDE SLOPES; AND DITCH BACK SLOPES ARE 2:1 NORMAL TO ℄ ADJACENT TRACK UNLESS NOTED OTHERWISE.

LEGEND

- *BALLAST*
- *SUBBALLAST*
- *RECYCLED CONCRETE*
- *CELLULAR CONCRETE FILL*

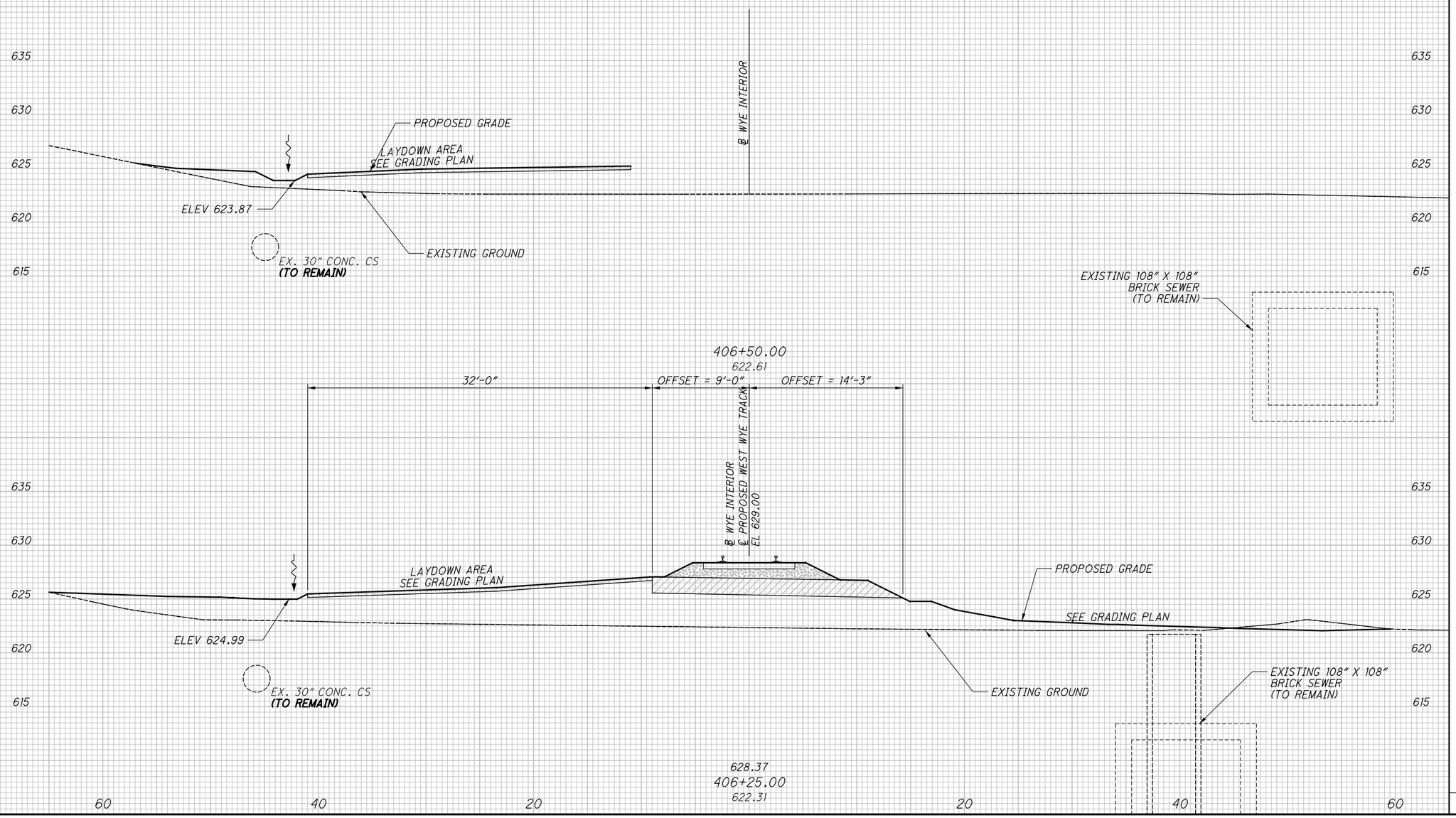

NO.	DATE	DESCRIPTION
0	2020-01-27	RFC ISSUE RECORD

CROSS SECTIONS - WYE INTERIOR
STA. 406+25.00 TO STA. 406+50.00
RECORD PLANS

CUY-IR490/SR010-2.09/19.28
RECORD PLANS

BU-17A - GCRTA WYE TRACK
...\Sheets\BU-17A\96833_XS017.dgn 3/31/2020 4:50:26 PM Jonathan.Shurilla

SEEDING	
END WIDTH	SQ. YDS.

LEGEND

- BALLAST
- SUBBALLAST
- RECYCLED CONCRETE
- CELLULAR CONCRETE FILL

TYPICAL FOR CROSS SECTIONS

CROSS SECTIONS ARE FOR GRADING DETAIL ONLY. SEE GRADING PLAN FOR ADITIONAL DETAIL, INCLUDING PROPOSED SLOPES. EXISTING AND PROPOSED UTILITIES AND DRAINAGE ARE NOT SHOWN.

BALLAST, SUBBALLAST AND DITCH SIDE SLOPES; AND DITCH BACK SLOPES ARE 2:1 NORMAL TO ℄ ADJACENT TRACK UNLESS NOTED OTHERWISE.

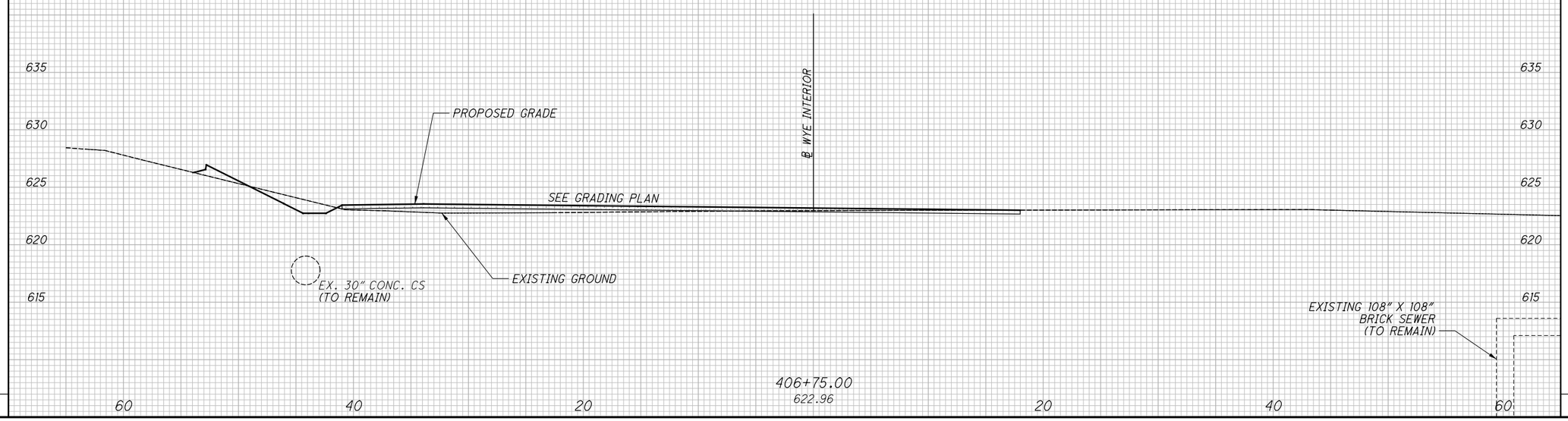

END AREA		VOLUME	
CUT	FILL	CUT	FILL

CALCULATED CMC
CHECKED JW

CROSS SECTIONS - WYE INTERIOR
STA. 406+75.00

RECORD PLANS

NO.	DATE	DESCRIPTION
0	2020-01-27	RFC ISSUE RECORD

CUY-IR490/SR010-2.09/19.28

RECORD PLANS

BU-17A - GCRTA WYE TRACK
...\Sheets\BU-17A\96833_XS017.dgn 3/31/2020 4:50:26 PM Jonathan.Shurilla

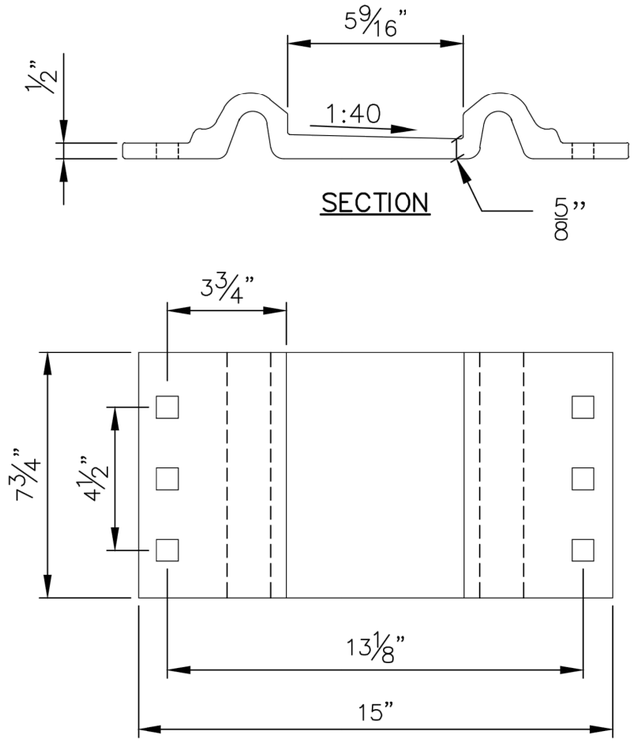

PLAN

115#RE TIE PLATE

NOT TO SCALE
(FOR WOOD & PLASTIC TIES ONLY)

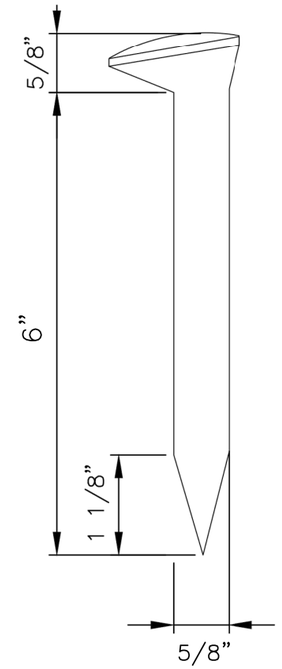

CUT SPIKE

NOT TO SCALE
(FOR WOOD &
COMPOSITE TIES ONLY)

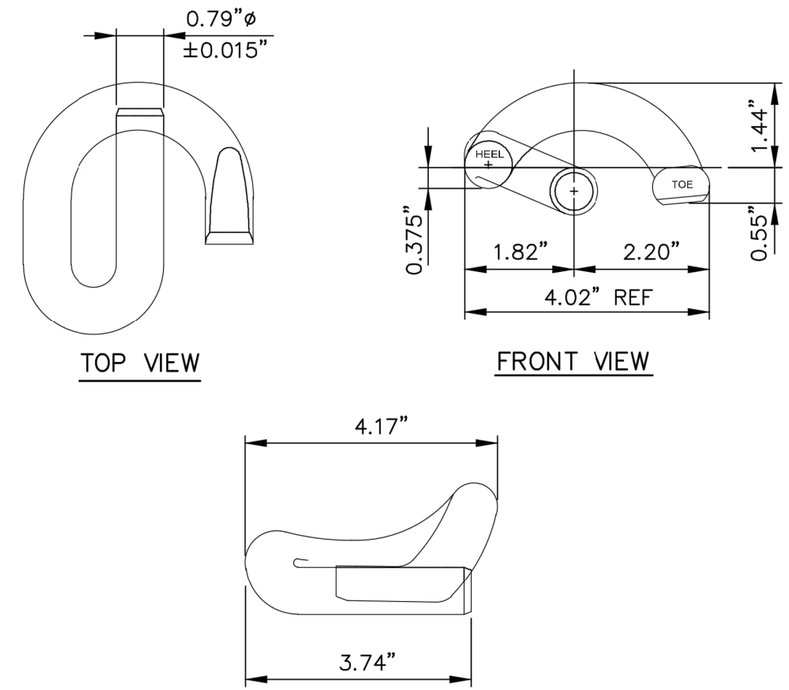

RAIL CLIP

NOT TO SCALE

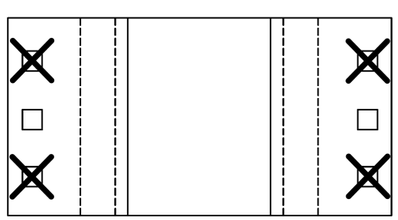

SPIKING PATTERN

NOT TO SCALE
FOR TANGENT, SPIRAL, AND CURVES
NOTE: CUT SPIKES INSTALLED BACKWARDS

NO.	DATE	DESCRIPTION
0	2020-01-27	RFC

ISSUE RECORD

GCRTA OTM DETAILS

CUY-IR490/SR010-2.09/19.28

RECORD PLANS

RECORD PLANS

RECORD PLANS

BU-17A - GCRTA WYE TRACK
...\Sheets\BU-17A\96833_SD001.dgn 3/31/2020 4:50:52 PM Jonathan.Shurilla

INSTALL 4 WASHER HEAD TIMBER DRIVE SPIKES MIN.PER 10' PLANK OR 3 WASHER HEAD TIMBER DRIVE SPIKES MIN PER 8' PLANK.STAGGER WASHER HEAD TIMBER DRIVE SPIKES LONGITUDINALLY ALONG PLANKS. INSTALL OUTSIDE WASHER HEAD TIMBER DRIVE SPIKES 6" FROM ENDS OF PLANKS DRILL 1/2" DIA.HOLE FOR 5/8" DIA.WASHER HEAD TIMBER DRIVE SPIKES.COUNTER BORE 2 1/2" DIA.AND 1 7/8" DEEP.

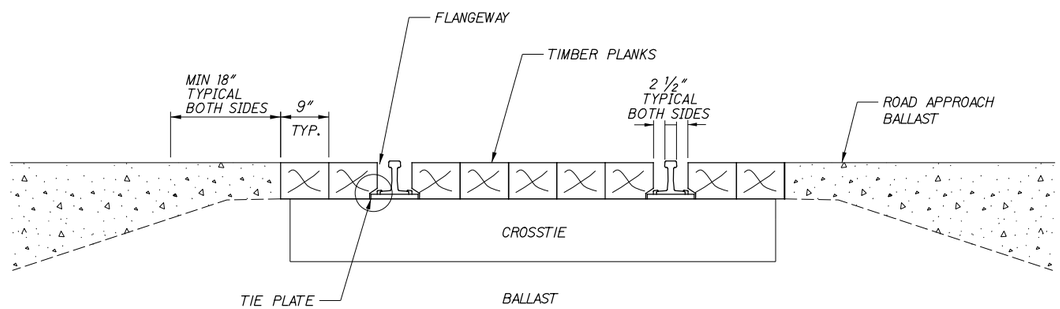

STATION 302+11 TO STATION 302+35

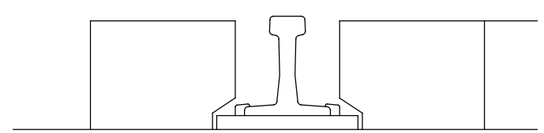

NOTES:

1. TOP OF PLANK ELEVATION SHALL EQUAL TOP OF RAIL ELEVATION,PLUS OR MINUS 1/4".

NO.	DATE	DESCRIPTION
0	2020-01-27	RFC

ISSUE RECORD

TIMBER PLANK GRADE CROSSING

RECORD PLANS

CUY-IR490/SR010-2.09/19.28

RECORD PLANS

BU-17A - GCRTA WYE TRACK
...\Sheets\BU-17A\96833_SD002.dgn 3/31/2020 4:51:49 PM Jonathan.Shurilla

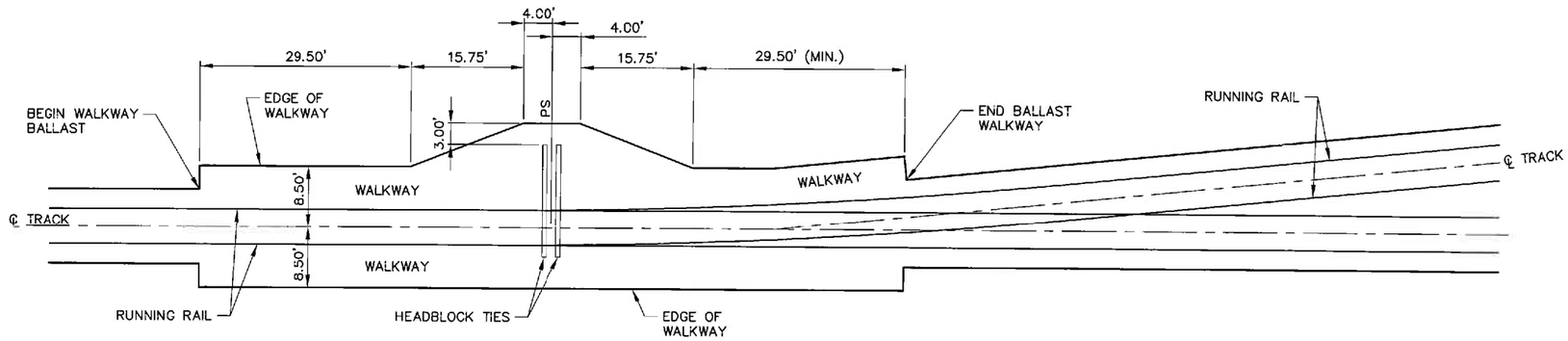

USE #57 LIMESTONE (AREMA BALLAST GRADATION NO. 5) ON WALKWAY

WALKWAY DETAIL

NTS

NO.	DATE	DESCRIPTION
0	2020-01-27	RFC

ISSUE RECORD

CUY-IR490/SR010-2.09/19.28

GCRTA WALKWAY DETAIL

RECORD PLANS

RECORD PLANS

RECORD PLANS

BU-17A - GCRTA WYE TRACK

...\Sheets\BU-17A\96833_SD003.dgn 3/31/2020 4:52:21 PM Jonathan.Shurilla

1 Scope

1.1 This Specification covers general instructions, testing and workmanship requirements and detailed material specifications relating to the purchase and manufacture of special trackwork for tee rails weighing 115 lb. per yard and heavier.

2 Applicable Documents

2.1 The latest specifications in the AREMA Manual for Railway Engineering, the American Society for Testing and Materials (ASTM) Book of Standards, the Society of Automobile Engineers (SAE) specifications, the American National Standards Institute specifications (ANSI), where indicated, covering a particular component or material shall apply.

2.2 The trackwork plans in the Portfolio shall be part of these specifications

2.3 Requirements not shown on the drawings, but which are mentioned in the specifications, or vice versa, or anything not expressly set forth in either, but which is specified in the order or contract, shall apply. Should anything be omitted from the drawings or specifications that is necessary for a clear understanding of the work, or should any error appear in either the drawings or specifications affecting the work, the manufacturer shall notify the purchaser and shall not proceed with the work until instructed to do so.

2.4 Any variations from the requirements established in 2.1, 2.2 and 2.3 shall be detailed in the inquiry contract and order.

3 Definition of Terms

3.1 The AREMA definition of terms relating to trackwork switches, frogs, guard rails, crossings and turnouts appear in the Foreword.

4 Basis of Purchase

4.1 The purchaser will furnish the manufacture specifications and drawings giving rail sections, joint drilling, angles, alignment, general dimensions and such special details as may be required.

5 Manufacture

5.1 Construction, design and details shall conform to the specified Portfolio Plan adopted by AREMA as recommended practice.

5.2 For track structures for which no plans have been adopted, or for proprietary trackwork items, the manufacture shall, when requested, submit detail drawings for approval.

6 WORKMANSHIP

6.1 Workmanship shall be in accordance with good commercial practice.

6.2 Accuracy of workmanship for completed frogs and switches shall be within the permissible variations prescribed in Plans No. 1020 to 1029.

6.3 Bends shall be made accurately in arcs of circles and without injury to the material.

6.4 Heating of the rails for bending shall be done in a manner so as to have a minimal adverse effect on the metal. When the nature of the bend permits, rails shall be bent cold.

6.5 Machining shall be true and all abutting surfaces shall fit accurately.

6.6 All sharp edges and corners shall be eliminated by grinding or machining to a suitable chamfer or radius wherever the rail section is altered by a machining.

6.7 A radius of 5/8" (15.9 mm) shall be provided (where possible) at the gage corners where wheel contact will occur.

6.8 All grinding shall be carefully performed, in a manner that will not develop grinding cracks.

6.9 Running surfaces of manganese steel parts shall be ground to a surface comparable to that of rolled rail. Manganese steel portions fitting into rails or other parts shall be ground or machined to a suitable fit.

6.10 Drilling shall be done accurately, at an angle where necessary.

6.10 1 All holes in carbon steel shall be drilled.

6.10.2 The burrs, fins and sharp edges of trackwork components, formed, sheared or cut by machine, shall be removed by grinding or machining a chamfer.

NO.	DATE	DESCRIPTION
0	2020-01-27	RFC

ISSUE RECORD

AREMA SPECIFICATIONS FOR SPECIAL TRACKWORK FOR RAILS 115 lb. AND HEAVIER
RECORD PLANS

CUY-IR490/SR010-2.09/19.28
RECORD PLANS

BU-17A - GCRTA WYE TRACK
...\Sheets\BU-17A\96833_SD004.dgn 3/31/2020 4:53:01 PM Jonathan.Shurilla

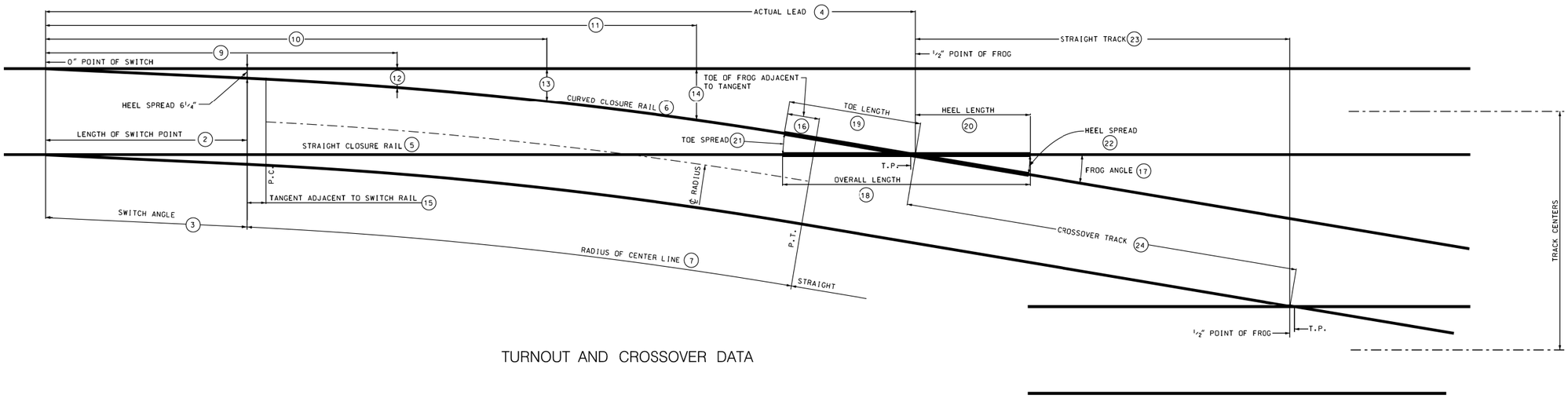

TURNOUT AND CROSSOVER DATA

	PROPERTIES OF SWITCHES			CLOSURE DISTANCE		LEAD CURVE		GAGE LINE OFFSETS								PROPERTIES OF FROGS							DATA FOR CROSSOVERS: 14'-0" TRACK CENTERS		DATA FOR CROSSOVERS: FOR CHANGE OF 1'-0" IN TRACK CENTERS	
1	2	3	4	5	6	7	8	9	10	11	12	13	14	15	16	1	17	18	19	20	21	22	23	24		
FROG No.	LENGTH OF POINTS	SWITCH ANGLE	ACTUAL LEAD	STRAIGHT CLOSURE RAIL	CURVED CLOSURE RAIL	RADIUS OF CENTER LINE	DEGREE OF CURVE							TANGENT ADJACENT TO SWITCH RAIL	TANGENT ADJACENT TO TOE OF FROG	FROG No.	FROG ANGLE	OVERALL LENGTH	TOE LENGTH	HEEL LENGTH	TOE SPREAD	HEEL SPREAD	STRAIGHT TRACK	CROSSOVER TRACK	STRAIGHT TRACK	CROSSOVER TRACK
	FT. IN.	DEG. MIN. SEC	FT. IN.	FT. IN.	FT. IN.	FT. IN.	DEG. MIN. SEC	FT. IN.	FT. IN.	FT. IN.	FT. IN.	FT. IN.	FT. IN.	FT. IN.	FT. IN.		DEG. MIN. SEC	FT. IN.	FT. IN.	FT. IN.	INCHES	INCHES	FT. IN.	FT. IN.	FT. IN.	FT. IN.
7	16'-6"(27'-11")	1°-48'-32"	62'-1"	28'-10"	29'-0 23/32"	365'-7 3/32"	15°-43'-17"	26'-2 1/4"	35'-10 1/2"	45'-6 3/4"	11 3/8"	1'-7 19/32"	2'-6 29/32"	2 7/8"	7 15/32"	7	8°-10'-16"	13'-0"	5'-4"	7'-8"	8 5/8"	13 19/32"	31'-0"	32'-0"	6'-11 9/16"	7'-0 7/16"
8	16'-6"(28'-0")	1°-48'-32"	68'-0"	34'-7 1/2"	34'-9 23/32"	487'-3 3/8"	11°-46'-44"	27'-7 1/4"	38'-8 1/2"	49'-9 3/4"	11 23/32"	1'-8 7/32"	2'-7 25/32"	11 3/8"	3 15/32"	8	7°-09'-10"	14'-8"	5'-4 1/2"	9'-3 1/2"	7 9/16"	14 13/32"	35'-6 3/4"	36'-5 1/4"	7'-11 5/8"	8'-0 3/8"
9	16'-6"(28'-4")	1°-48'-32"	72'-3 1/2"	36'-11 1/2"	37'-1 11/16"	615'-1 7/16"	9°-19'-29"	28'-10 1/4"	41'-2 1/2"	53'-6 3/4"	1'-0 11/32"	1'-9 3/8"	2'-9 7/16"	4 19/32"	5 15/32"	9	6°-21'-35"	17'-11"	7'-0"	10'-11"	8 13/16"	15 1/32"	40'-1 5/16"	40'-10 21/32"	8'-11 21/32"	9'-0 11/32"
10	16'-6"(29'-6")	1°-48'-32"	78'-9"	42'-3"	42'-4 31/32"	779'-4 11/16"	7°-21'-23"	29'-11 3/4"	43'-5 1/2"	56'-11 1/4"	1'-0 9/32"	1'-9 1/32"	2'-8 19/32"	2'-7"	7 1/4"	10	5°-43'-29"	17'-11"	7'-0"	10'-11"	7 7/8"	13 19/32"	44'-7 25/32"	45'-4 3/16"	9'-11 11/16"	10'-0 5/16"

NOTES

1. Dimensions are to nearest 1/32".
2. The data shown are computed for turnouts out of straight standard 4'-8 1/2" gage track. If the wheel base of the equipment used requires wider gage for the switch alignment or curvature shown, the lead and alignment of curved closure rail shall be maintained, and inside stock and curved rails shall be moved out the necessary amount. The gage of straight track through switch will then be increased and the straight closure rail shall be bent to true alignment in advance of toe of frog.
3. FROG DESIGNS
   For short spring rail type frogs, the straight closure, and for solid manganese frogs, the straight and curved closures, shall be lengthened to conform.
4. For length of closure rails, see Plan No. 911.
5. For bills of timber for various turnouts and crossovers see Plan No. 912.
6. For permissible speeds see AREMA Chapter 5.

AMERICAN RAILWAY ENGINEERING
AND MAINTENANCE OF WAY ASSOCIATION

TURNOUT AND CROSSOVER DATA
FOR STRAIGHT SPLIT SWITCHES

NO.	DATE	DESCRIPTION
0	2020-01-27	RFC

ISSUE RECORD

TURNOUT AND CROSSOVER DATA
FOR STRAIGHT SPLIT SWITCHES

RECORD PLANS

CUY-IR490/SR010-
2.09/19.28

RECORD PLANS

100
106

BU-17A - GCRTA WYE TRACK
...\Sheets\BU-17A\96833_SD005.dgn 3/31/2020 4:53:28 PM Jonathan.Shurilla

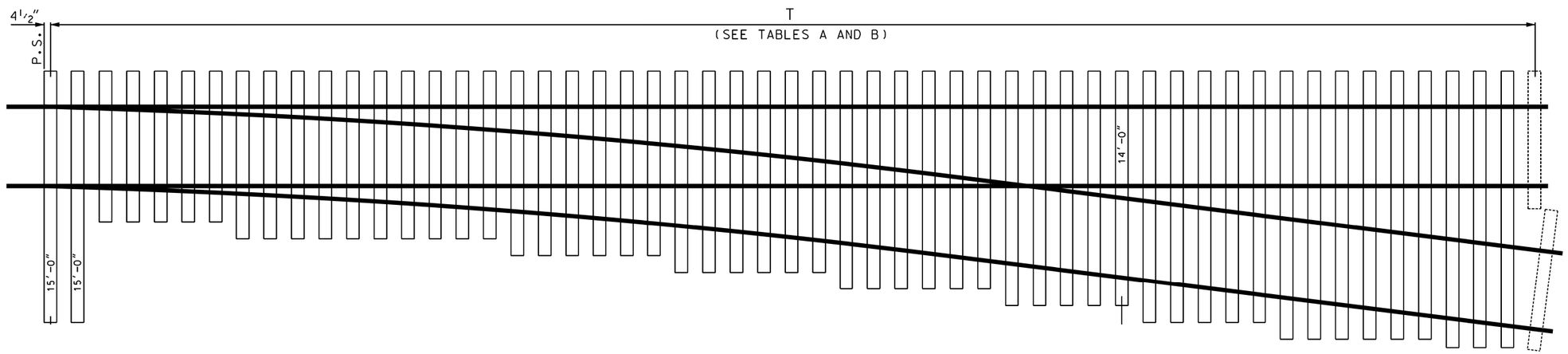

DRAWN No.8
(CURVED SWITCH POINTS)

TABLE A BILL OF SWITCH TIES FOR TURNOUTS WITH STRAIGHT SWITCHES

FROG No.	LENGTH OF SWITCH RAIL	TOE LENGTH TO 1/2" POINT	LEAD P.S. TO 1/2" POINT	LENGTHS AND QUANTITIES OF TIES									QTY OF TIES	BOARD MEASURE	TRACK LENGTHS OF CROSS TIES REPLACED
				9'-0"	10'-0"	11'-0"	12'-0"	13'-0"	14'-0"	15'-0"	16'-0"	17'-0"			T
7	16'-6"	5'-4"	62'-1"	7	13	6	5	3	4	6	6	2	52	3329	88'-0"
8	16'-6"	5'-4 1/2"	68'-0"	7	13	6	6	4	5	7	6	3	57	3701	97'-8"
9	16'-6"	7'-0"	72'-3 1/2"	7	13	7	7	6	5	8	6	4	63	4127	105'-8"
10	16'-6"	7'-0"	78'-9"	7	15	8	7	6	6	7	8	4	68	4452	115'-11"

TABLE B BILL OF SWITCH TIES FOR TURNOUTS WITH CURVED SWITCHES

FROG No.	LENGTH OF SWITCH RAIL	TOE LENGTH TO 1/2" POINT	LEAD P.S. TO 1/2" POINT	LENGTHS AND QUANTITIES OF TIES									QTY OF TIES	BOARD MEASURE	TRACK LENGTHS OF CROSS TIES REPLACED
				9'-0"	10'-0"	11'-0"	12'-0"	13'-0"	14'-0"	15'-0"	16'-0"	17'-0"			T
6	13'-0"	5'-4 1/2"	49'-9"	5	8	5	5	4	3	5	5	2	42	2746	71'-11"
7	13'-0"	5'-4"	54'-8 1/2"	5	10	6	5	4	4	6	6	2	48	3145	80'-7"
8	13'-0"	5'-4 1/2"	58'-11 1/8"	5	10	6	6	6	5	5	6	3	52	3429	88'-7"
9	19'-6"	7'-0"	74'-1 1/4"	9	13	8	6	6	5	8	6	4	65	4216	107'-6"
10	19'-6"	7'-0"	78'-11"	9	13	9	7	6	6	7	8	4	69	4499	116'-1"
11	19'-6"	8'-7 1/2"	83'-6"	9	14	9	8	7	6	8	8	4	73	4762	124'-1"
12	19'-6"	8'-7 1/2"	87'-3 1/2"	9	14	9	9	8	7	9	9	4	78	5140	131'-11"
14	26'-0"	10'-3"	108'-7 1/2"	12	19	13	9	9	8	11	11	5	97	6321	160'-9"
15	26'-0"	10'-3"	113'-5"	12	19	13	11	9	9	11	12	6	102	6694	169'-4"
16	26'-0"	11'-10 1/2"	118'-5"	12	21	14	11	9	11	10	12	6	106	6867	178'-1"
20	39'-0"	15'-1 1/2"	156'-0 1/2"	20	27	15	14	13	11	15	14	7	138	8863	230'-8"
24	39'-0"	16'-9"	177'-3"	34	21	15	12	16	15	17	14	14	158	9666	264'-0"

NOTES

1. Data - For tabulation of general turnout and crossover data for straight switches, see Plan No. 910.
2. Data - For tabulation of general turnout and crossover data for curved switches, see Plan No. 920.
3. Lengths of switch ties in tables are based on 9'-0" cross ties.
4. Board measure given in tables is based on switch ties 7" x 9".
5. Data in tables are based on locating ties under switches and frogs as indicated on AREMA Trackwork Plans of these units and on spacing of other ties approximately 20" center to center.

AMERICAN RAILWAY ENGINEERING
AND MAINTENANCE OF WAY ASSOCIATION

BILLS OF SWITCH TIES
FOR TURNOUTS

NO.	DATE	DESCRIPTION
0	2020-01-27	RFC

ISSUE RECORD

BILLS OF SWITCH TIES FOR TURNOUTS

RECORD PLANS

CUY-IR490/SR010-2.09/19.28

RECORD PLANS

101
106

BU-17A - GCRTA WYE TRACK
...\Sheets\BU-17A\96833_SD006.dgn 3/31/2020 4:54:28 PM Jonathan.Shurilla

Note:
Top half of Plan View shown for switch using spiked plates.

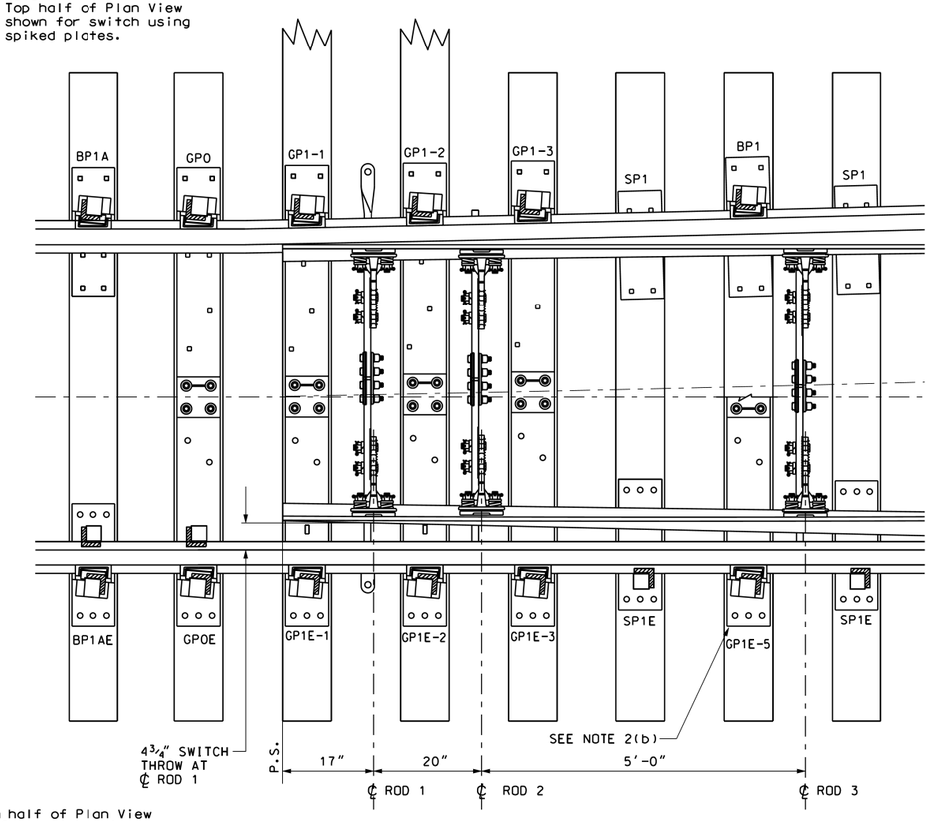

Note:
Bottom half of Plan View shown for switch using elastic fasteners and plates for wood tie screws.

16'-6" SPRING SWITCH

16'-6" SPRING SWITCH PER PLAN NO. 111, SPEC. S-111A
16'-6" SPRING SWITCH PER PLAN NO. 112, SPEC. S-112A

BILL OF MATERIAL

The designation of the Bill of Material for a spring split switch is the same as the Bill of Material for the corresponding hand throw split switch, except that it is preceded by the letter "S". The Bills of Material for spring switches in each case include all material listed under the corresponding Bills of Material for split switches, i.e., Specification S-111-A, similar to Specification 111-A, except with the following modification:

OMIT THE FOLLOWING

		Detail Numbers
2	Double Reinforced Switch Points complete with details: For Machining, Straight Switch Point	5100
4	Brace Plate No. BP1	4020 or 6020

ADD THE FOLLOWING

2	Double reinforced switch points complete with details: For Machining, Straight Switch Point	5100 S.S.
2	Gage Plate No. GP1	3127 or 4127
1	Insulated Back Switch Rod	3117, 6011

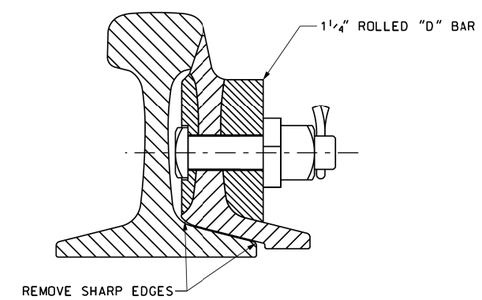

DETAIL 5100 S.S.
FOR STRAIGHT SWITCH POINTS
REINFORCING BARS ON STOCK RAIL SIDE TO BE ½" THICK SECURED THROUGHOUT BY 1" DIA. BOLTS.

1- BILL OF MATERIAL. The details on this plan and in the Bill of Material show the modifications in split switch design recommended for spring switch operation: namely the use of four (4) gage plates adjacent to point of switch and 1¼" thick reinforcing bars on gage side of points. Details not otherwise shown shall conform to the Plans. Purchaser shall state which Bill of Material specification is desired.

2- ALTERNATES
(a) Any details of fittings that will apply per Plans No.221, 222, 223 and 224.

(b) When purchaser specifies that switch is to be equipped with Facing Point Lock, omit two (2) BP1 plates and add one (1) gage plate shown as GP1E-5 on plan.

3- Switch rod hole drillings on spring switches are specific to this drawing.

4- Spring switch installations require some special length switch timbers depending on the type of spring switch mechanism used and individual railroad requirements covering clearances between gage lines and oil buffer and switch stand or facing point lock.

5- SPECIFICATIONS - See Plan No.100.

6- For point details, refer to Plan No. 221.

AMERICAN RAILWAY ENGINEERING
AND MAINTENANCE OF WAY ASSOCIATION

16'-6" SPRING SWITCH

Adopted 1955. Converted to C.A.D. 2003. Revised 2008.

Copyright © 2008 by the American Railway Engineering and Maintenance of Way

NO.	DATE	DESCRIPTION
0	2020-01-27	RFC

ISSUE RECORD

16'-6" SPRING SWITCH

RECORD PLANS

CUY-IR490/SR010-2.09/19.28

RECORD PLANS

BU-17A - GCRTA WYE TRACK
...\Sheets\BU-17A\96833_SD007.dgn 3/31/2020 5:02:10 PM Jonathan.Shurilla

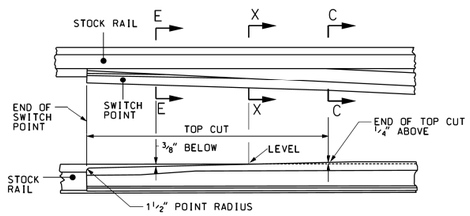

CONSTRUCTION FOR CURVED AND STRAIGHT SWITCH POINTS

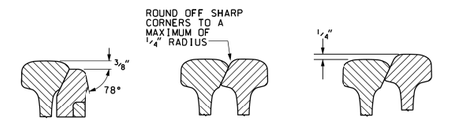

FOR SPECIFICATIONS, SEE AREMA Plan NO. 100

5/8" GAGE SIDE RADIUS FROM SECTION C-C TO SECTION EE REDUCING TO 0" AT POINT

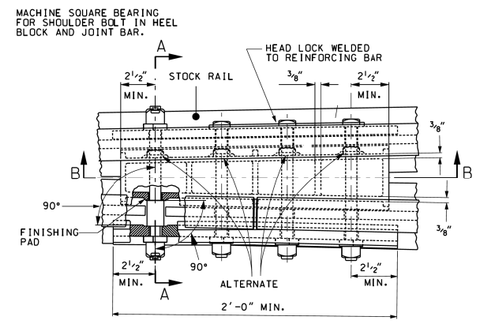

BEND JOINT BAR AT CENTER TO ALIGNMENT OF FULLY OPENED SWITCH POINT AND MACHINE TOP CORNER PARALLEL TO RAIL HEAD.

TOP VIEW

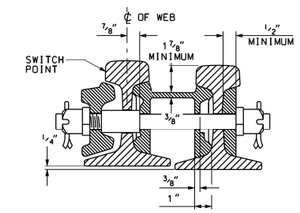

DETAIL 2125
SECTION A-A
OFFSET HEEL

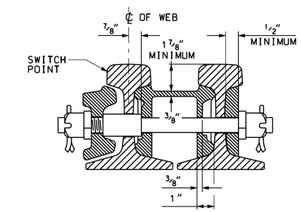

DETAIL 1125
SECTION A-A
LEVEL HEEL

HEEL BLOCK-CAST STEEL, CLASS B, HARD. FOR FIT SEE PLANS NO. 1010 AND 1011.

BOLTS-HIGH TENSILE STEEL AND GENERALLY PER PLAN NO.100. SECTION M11. DIAMETER OF BOLTS AND SPACING OF HOLES SHALL CONFORM TO JOINT BAR DETAIL SPECIFIED. EXCEPT THAT WHEN SIX HOLE BARS ARE DESCRIBED. THE BLOCK SHALL BE DESIGNED WITH FIVE HOLES. THE SIXTH HOLE TOWARD THE NARROW END BEING OMITTED AND THE JOINT BARS SHORTENED ACCORDINGLY.

ALTERNATE-SHORTER BOLTS NOT EXTENDING THROUGH STOCK RAIL TO BE FURNISHED WHEN SPECIFIED WITH THIMBLE FOR FIRST BOLT INSTEAD OF SOLID SHOULDER MINIMUM THICKNESS OF THIMBLE 5/16" AND MINIMUM BRINELL OR EQUIVALENT HARDNESS 350.

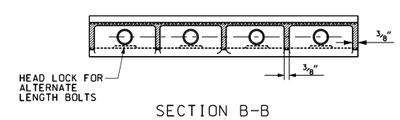

SECTION B-B

HEEL JOINT ASSEMBLY

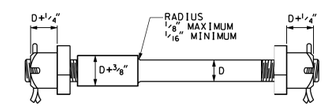

DETAIL OF SHOULDER BOLT

D = DIAMETER OF BOLTS
ALLOY STEEL S.A.E. 4130 OR EQUIVALENT
HEAT TREATED - BRINELL MINIMUM 275

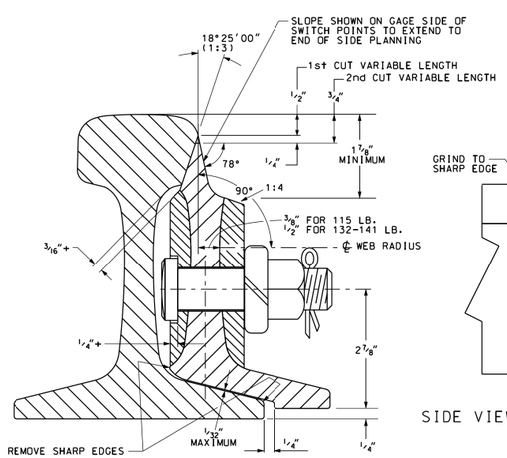

SECTION VIEW AT THE POINT

DETAIL 5100

REINFORCING BARS TO BE 1/2" THICK. SECURED BY 3/4" BOLTS AND PINS IN CENTER LINE OF WEB. EXCEPT HOLES MARKED "B" ON ELEVATION OF SWITCH POINTS TO BE FURNISHED WITH BOLTS 1" DIAMETER.

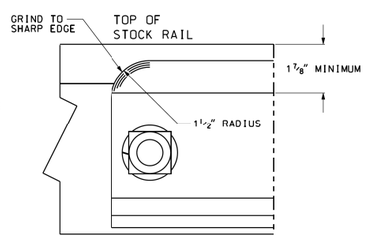

SIDE VIEW OF END OF SWITCH POINT

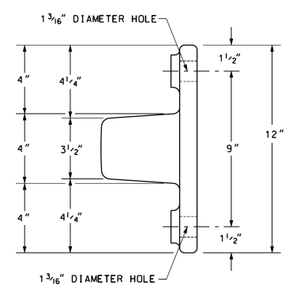

DETAIL 1120
CAST STEEL OR DUCTILE
IRON FLOATING HEEL BLOCK

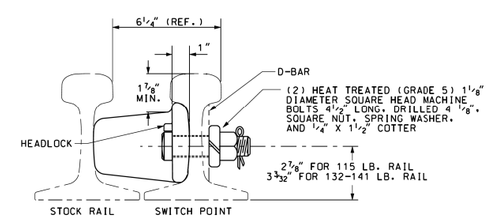

HEEL DETAIL USING FLOATING HEEL BLOCK

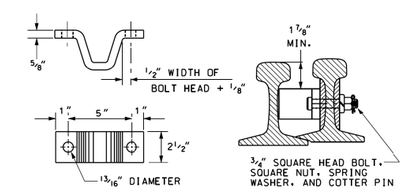

DETAIL 2024
STOP

AMERICAN RAILWAY ENGINEERING
AND MAINTENANCE OF WAY ASSOCIATION

DETAILS FOR SWITCH POINTS

PLAN NO. 221-08

Adopted 1955. Converted to C.A.D. 1991. Revised 2008.

Copyright © 2008 by the American Railway Engineering and Maintenance of Way Association (AREMA). All rights reserved.

NO.	DATE	DESCRIPTION
0	2020-01-27	RFC

ISSUE RECORD

RECORD PLANS

DETAILS FOR SWITCH POINTS

RECORD PLANS

CUY-IR490/SR010-2.09/19.28

RECORD PLANS

103
106

BU-17A - GCRTA WYE TRACK
...\Sheets\BU-17A\96833_SD008.dgn 3/31/2020 5:02:52 PM Jonathan.Shurilla

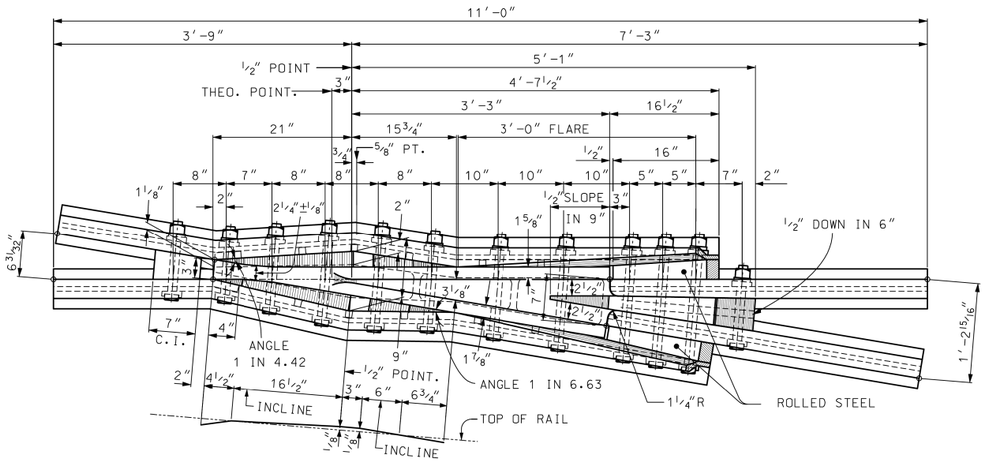

ELEVATION OF WING WHEEL RISER

QUANTITY OF HOOK TWIN TIE PLATES						
MARK	L23	L27	L31	LR23	LR27	LR31
TYPE II RAILS	4	8	2	2	2	2
TYPE III RAILS	4	8	2	2	2	2

No.6 RAIL BOUND MANGANESE STEEL FROG

ANGLE 9°-31′-38″

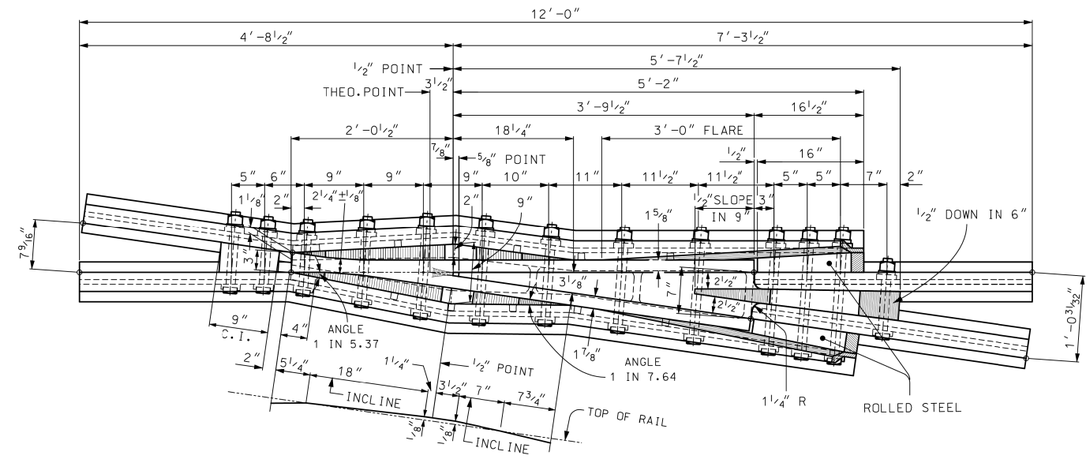

ELEVATION OF WING WHEEL RISER

QUANTITY OF HOOK TWIN TIE PLATES						
MARK	L23	L27	L31	LR23	LR27	LR31
TYPE II RAILS	4	10	2	2	2	2
TYPE III RAILS	4	10	2	2	2	2

No.7 RAIL BOUND MANGANESE STEEL FROG

ANGLE 8°-10′-16″

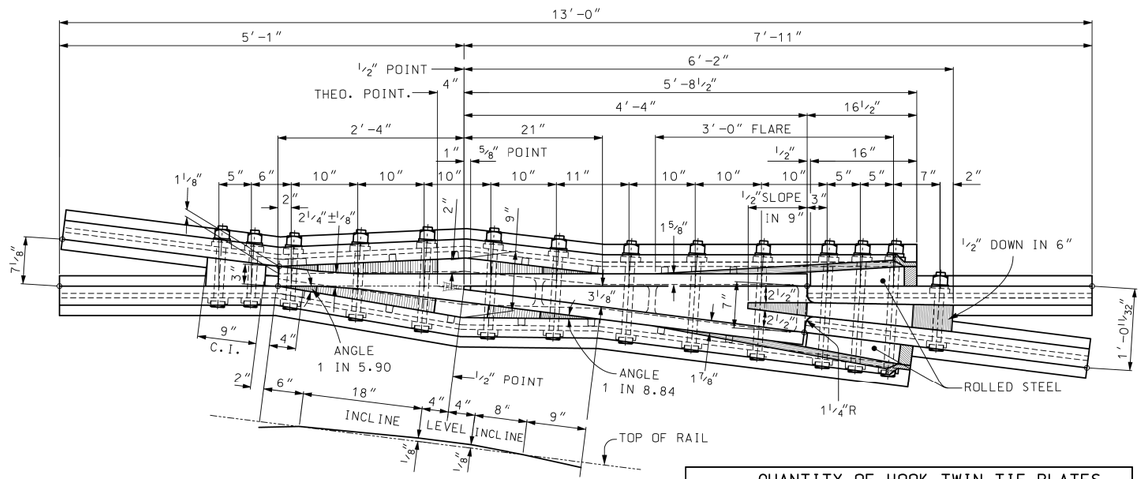

ELEVATION OF WING WHEEL RISER

QUANTITY OF HOOK TWIN TIE PLATES						
MARK	L23	L27	L31	LR23	LR27	LR31
TYPE II RAILS	6	10	2	2	4	2
TYPE III RAILS	6	10	2	2	4	2

No.8 RAIL BOUND MANGANESE STEEL FROG

ANGLE 7°-09′-10″

NOTES

1 - DETAILS OF JOINT BARS: Purchaser shall in all cases supply detail of joint bars, especially as to size and location of holes required in rail ends.

2 - PLATES: Twin Tie Plates shall be furnished with frog unless otherwise specified. For application and details of twin tie plates, see Plan Basic No.241.

3 - PLAN REFERENCE: For additional data, sections, and alternates see Plan Basic No.621.

4 - ALTERNATE: To be furnished when specified.
BONDING: Fillers to be slotted at flare as illustrated for drilling of bond holes.

5 - SPECIFICATIONS: See AREMA Plan Basic No.100.

AMERICAN RAILWAY ENGINEERING
AND MAINTENANCE OF WAY ASSOCIATION

No. 6, No. 7 AND No. 8 RAIL BOUND MANGANESE
STEEL FROGS FOR RAILS 112 LB. AND HEAVIER.
HEAVY WALL

NO.	DATE	DESCRIPTION
0	2020-01-27	RFC

ISSUE RECORD

Adopted 1986, Revised 1986, Converted to C.A.D. Sep. 1992. C.A.D. updated August 2003

Copyright © 2003 by the American Railway Engineering and Maintenance of Way

NO. 6, NO. 7 & NO. 8 RAIL BOUND MANGANESE STEEL FROGS FOR RAILS 112 LB. & HEAVIER (HEAVY WALL)

RECORD PLANS

CUY-IR490/SR010-2.09/19.28

RECORD PLANS

BU-17A - GCRTA WYE TRACK
...\Sheets\BU-17A\96833_SD009.dgn 3/31/2020 5:03:43 PM Jonathan.Shurilla

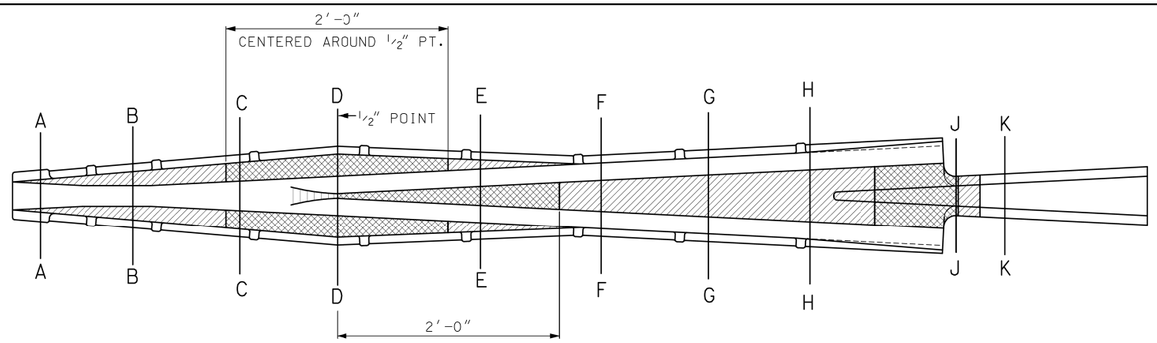

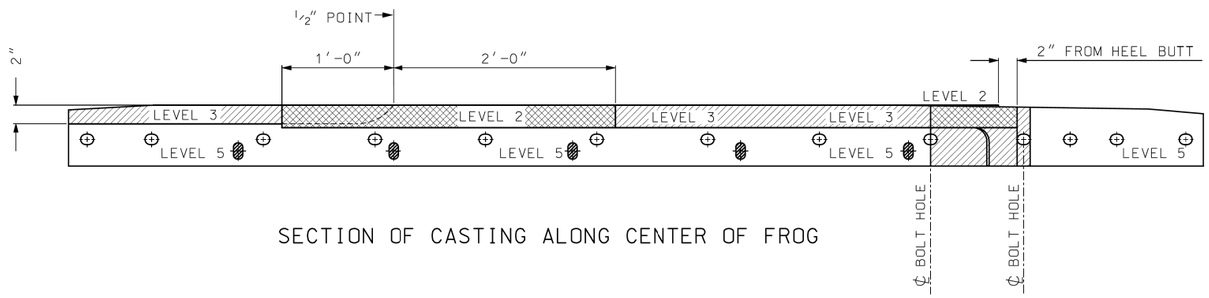

SECTION OF CASTING ALONG CENTER OF FROG

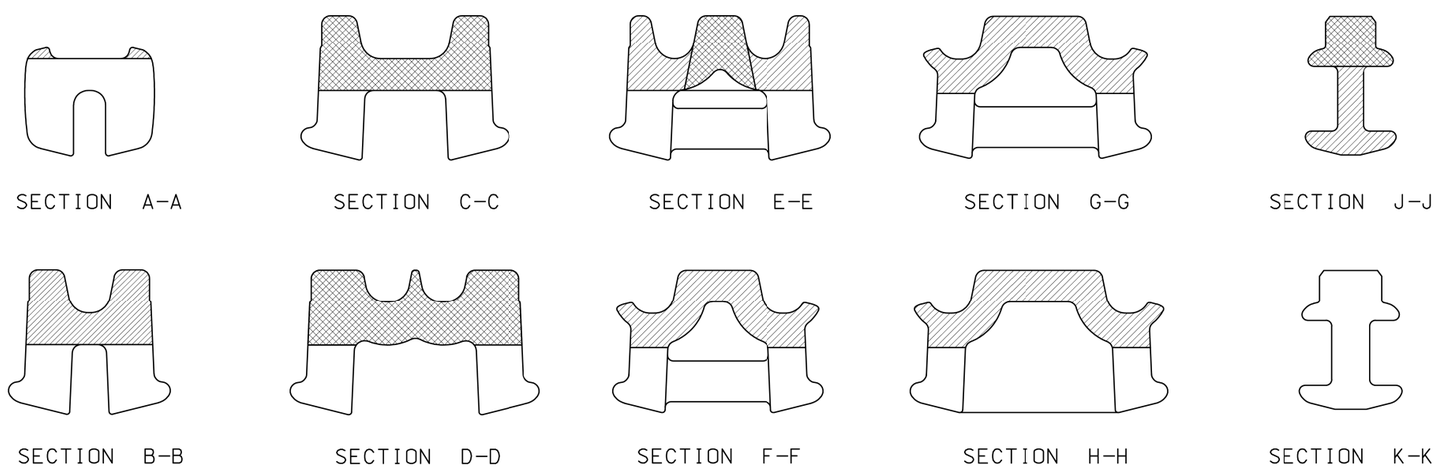

NOTES

WITH REFERENCE TO ASTM E 446,E 186,E 280 AND THE ASTM REFERENCE RADIOGRAPHS, ALL AREMA TYPE MANGANESE FROG CASTINGS MUST MEET THE FOLLOWING CRITERIA:

- MUST BE 1, OR 2
- MUST BE 1, 2 OR 3
- MUST BE 1, 2,3,4 OR 5

ASTM LEVELS APPLY TO THE FOLLOWING DEFECTS OR DISCONTINUITIES:
- -ASTM CATEGORY 'A'- GAS POROSITY
- -ASTM CATEGORY 'B'- SAND AND SLAG INCLUSIONS
- -ASTM CATEGORY 'C'- SHRINKAGE

THIS SPECIFICATION APPLIES TO ALL RBM FROGS, AREMA PLAN 616, 621 AND ALSO TO AREMA CROSSINGS PLAN 750, 751, 768 AND 769.

AREMA PLANS 616 AND 621 SHOWN

AMERICAN RAILWAY ENGINEERING
AND MAINTENANCE OF WAY ASSOCIATION

RADIOGRAPHIC TESTING OF
RAIL BOUND MANGANESE STEEL FROG CASTING,
INTERNAL SOUNDNESS SEVERITY LEVELS

PLAN NO. 1012–03

Adopted March 1992. Converted to C.A.D. April 2003.

Copyright © 2003 by the American Railway Engineering and Maintenance of Way A

NO.	DATE	DESCRIPTION
0	2020-01-27	RFC

ISSUE RECORD

RADIOGRAPHIC TESTING OF RAIL BOUND MANGANESE STEEL FROG CASTING, INTERNAL SOUNDNESS SEVERITY LEVELS
RECORD PLANS

CUY-IR490/SR010-2.09/19.28
RECORD PLANS

BU-17A - GCRTA WYE TRACK
...\Sheets\BU-17A\96833_SD010.dgn 3/31/2020 5:04:21 PM Jonathan.Shurilla

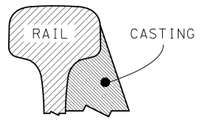

JOINT MISMATCH CASTING TO BE GROUND TO MATCH RAIL HEAD SLOPE IN 9". 0.040" MISMATCH ALLOWED

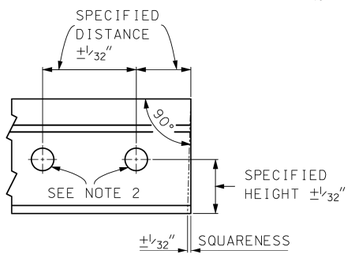

RAIL END AND JOINT DRILLING

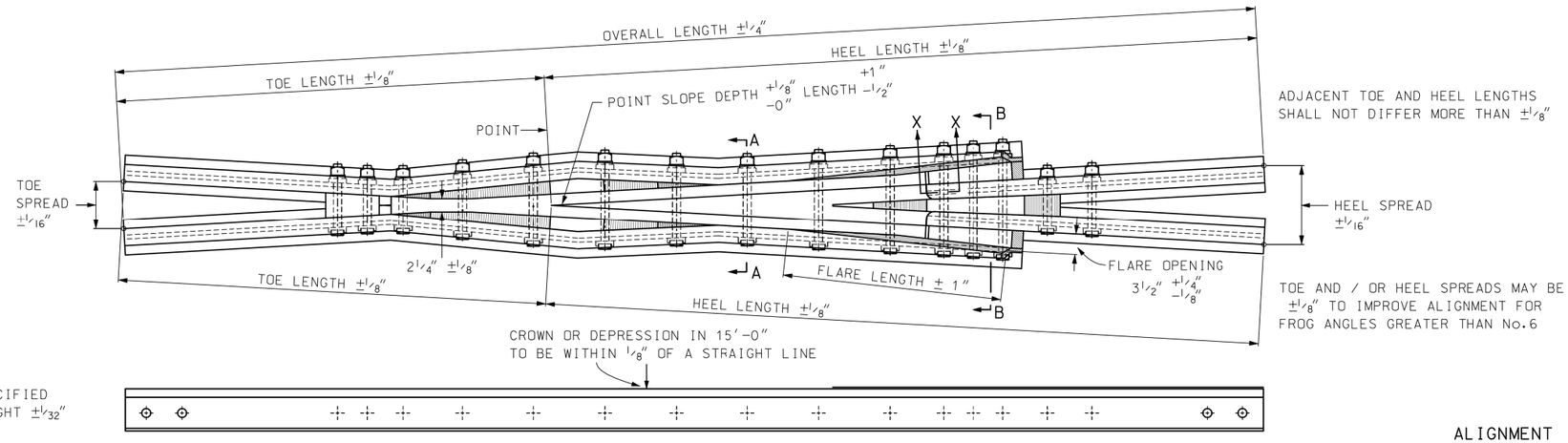

ADJACENT TOE AND HEEL LENGTHS SHALL NOT DIFFER MORE THAN ±1/8"

TOE AND / OR HEEL SPREADS MAY BE ±1/8" TO IMPROVE ALIGNMENT FOR FROG ANGLES GREATER THAN No.6

TYPICAL PLAN AND ELEVATION OF A RBM FROG
(DRAWN No.9 FROG)

ALIGNMENT

ACTUAL GAUGE LINES OF COMPLETED FROGS SHALL NOT VARY MORE THAN ±1/16" FROM TRUE ALIGNMENT. THE LINE PRODUCED FROM TOE SHALL NOT TOUCH ACTUAL FROG POINT.

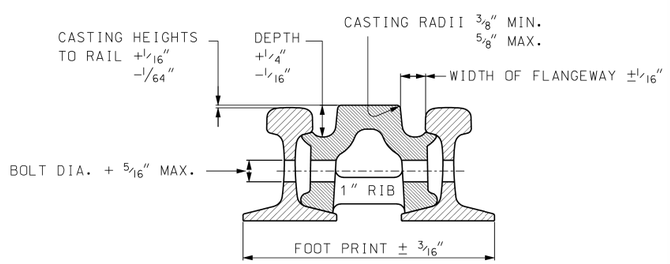

SECTION A–A

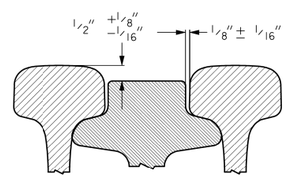

PARTIAL SECTION B–B

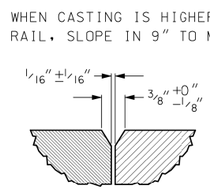

SECTION THROUGH X–X

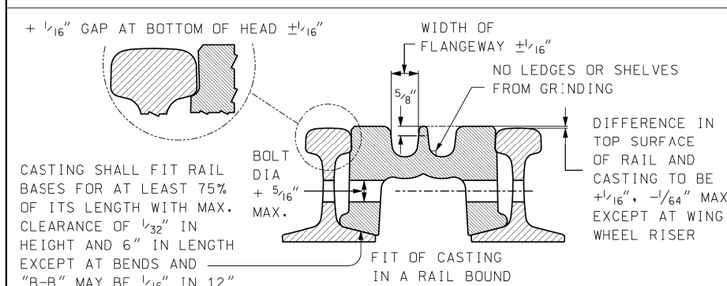

MANGANESE STEEL FROG
SECTION AT BOLT, NEAR D-D PLAN BASIC No.621

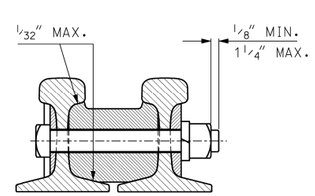

SECTION INDICATING FIT OF CAST TOE AND HEEL FILLER BLOCKS

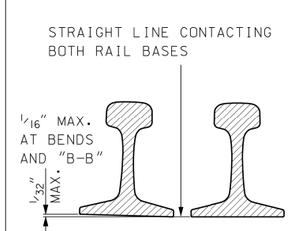

CROSS LEVEL OF RAIL BASES THROUGH LENGTH OF FROG

NOTES:

1. Specifications - See Plan Basic No.100.
2. JOINT HOLES: A variation of nothing under and 1/16" over in size of bolt holes will be permitted.
3. Depth hardening specification, Brinell hardness number and test locations per Plan Basic 100 and detail part M2 manganese steel castings paragraph M2.7 depth hardening.
4. Remove branding and stamping within 1/2" of bolt hole.
5. Where sc specified by the purchaser, the following footprint tolerances shall apply:

   The overall dimension from outer edge to outer edge of frog base shall be the theoretical dimension for that location plus or minus 3/16" these measurements shall be taken at right angles to the centerline of the frog and across the base of the frog at center line of tie locations as specified in the standard drawings. No measurement shall be taken within 6 inches of a bend location.

AMERICAN RAILWAY ENGINEERING AND MAINTENANCE OF WAY ASSOCIATION

PERMISSIBLE VARIATIONS IN COMPLETED RBM STEEL FROGS.

PLAN NO. 1021–03

Adopted 2003

Copyright © 2003 by the American Railway Engineering and Maintenance of Way

NO.	DATE	DESCRIPTION
0	2020-01-27	RFC

ISSUE RECORD

PERMISSIBLE VARIATIONS IN COMPLETED RBM STEEL FROGS

RECORD PLANS

CUY-IR490/SR010-2.09/19.28

RECORD PLANS

BU-17A - GCRTA WYE TRACK
...\Sheets\BU-17A\96833_SD011.dgn 3/31/2020 5:05:02 PM Jonathan.Shurilla

Customer:	INDEPENDENCE EXCAVATING, INC.
Job Name:	ODOT 173000 - Opp Corridor Ph 3
Job #:	173408
Structure ID:	S-26 - BU-17A
Station:	
Type:	Doghouse Utility Vault
SalesPerson:	Ralph Hastings

Description	UOM	Quantity	Weight
Stock 48"Ø Flat Top W/ 26"Ø Hole	EA	1	1185
48"Ø Manhole Riser x 60" tall	EA	1	4336
Transition 13'-0" x 15'-0" x 12" thick x 48"Ø	EA	1	27400
11'-0" x 13'-0" Doghouse Riser x 11' tall - 12" walls	EA	1	64000
Dog House Hole	EA	1	0
Doghouse Hole	EA	2	0

Lindsay PRECAST
1-800-837-7788
6845 Erie Ave. N.W.
PO Box 578
Canal Fulton, Ohio 44614

Rim:	631.25'
Invert:	613.89'
Rim to Invert:	17.36'
Sump:	1.14'

Drawing dated March 31, 2020
Plan date stamped 3/17/20
Rev 1 - Dated March 17, 2020 - Revd top for ERGO hinged cover
Rev 2 - Dated April 21, 2020 - Revised Flow Directional Arrows

Step Degree: 180

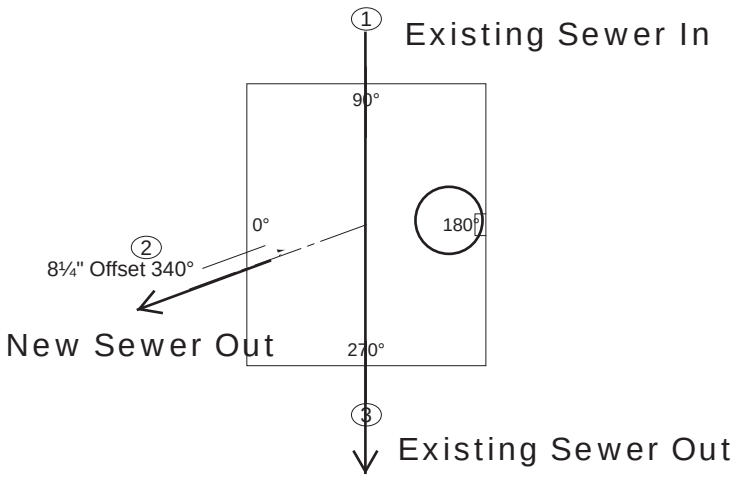

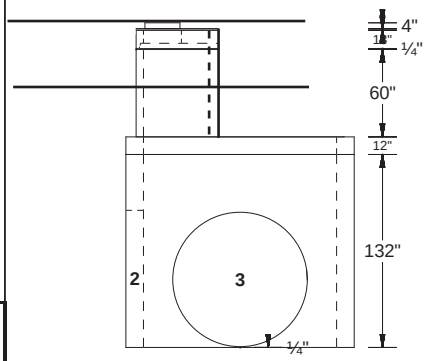

PipeNum	Elevation	%Grade	Angle	Pipe	Hole or Pipe Seal Type
(1)	613.89	-0.22	90	60" - BRICK	Doghouse - Brick
(2)	614.85	-0.22	340	60" - RCP Co-Pipe	STYROFOAM
(3)	613.89	0.22	270	60" - BRICK	Doghouse - Brick

Dog House Hole
Doghouse Hole

03/31/2020

Lindsay PRECAST

Canal Fulton, OH
800-837-7788
Alachua, FL
800-669-2278
Rock Hill, SC
800-768-8265
Franklinton, NC
800-768-8265
Colorado Springs, CO
888-685-7595
Dacono, CO
888-685-7595
WWW.LINDSAYPRECAST.COM

Rev 2 - April 21, 2020
- see previous page

Independence Excavating
ODOT 173000 - OC3
Doghouse Manhole S-26
11'-0" x 13'-0" x 11'-0" tall
64,000#'s

631.25 Rim
614.85 60"Ø RCP
613.89 60"Ø brick
17.36'
1.14' sump
18.50' overall

18.50
-11.00' D/H riser
- 1.00' transition
- 5.00' 4'Ø riser
- 1.08' flat top
- 0.09' field adj
- 0.33' ERGO
0.00

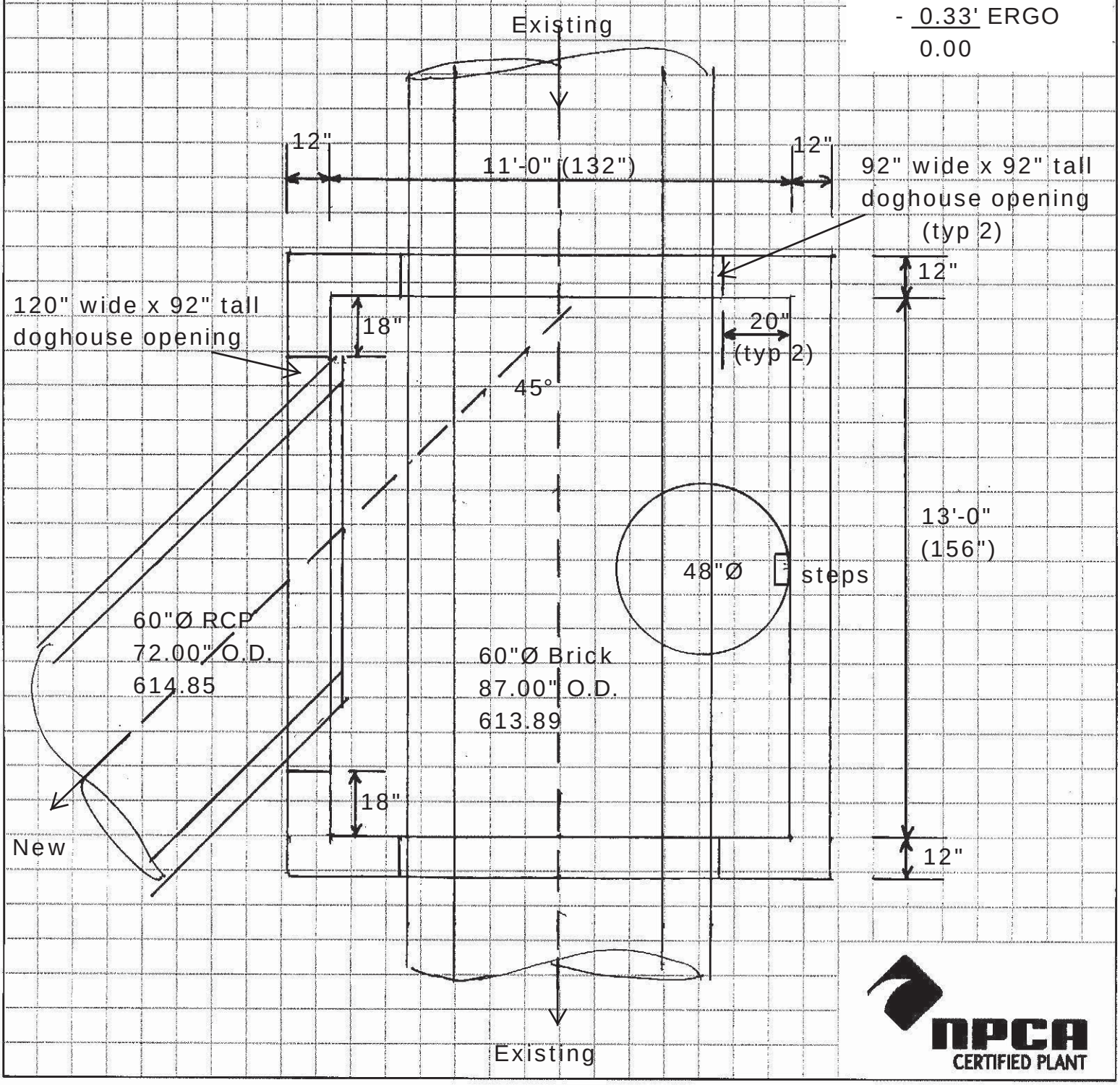

NPCA CERTIFIED PLANT

Lindsay PRECAST

Canal Fulton, OH
800-837-7788
Alachua, FL
800-669-2278
Rock Hill, SC
800-768-8265
Franklinton, NC
800-768-8265
Colorado Springs, CO
888-685-7595
Dacono, CO
888-685-7595
WWW.LINDSAYPRECAST.COM

Independence Excavating
ODOT 173000 - OC3

Doghouse Mh S-26
11'-0" x 13'-0" x 11'-0" tall riser

Profile View

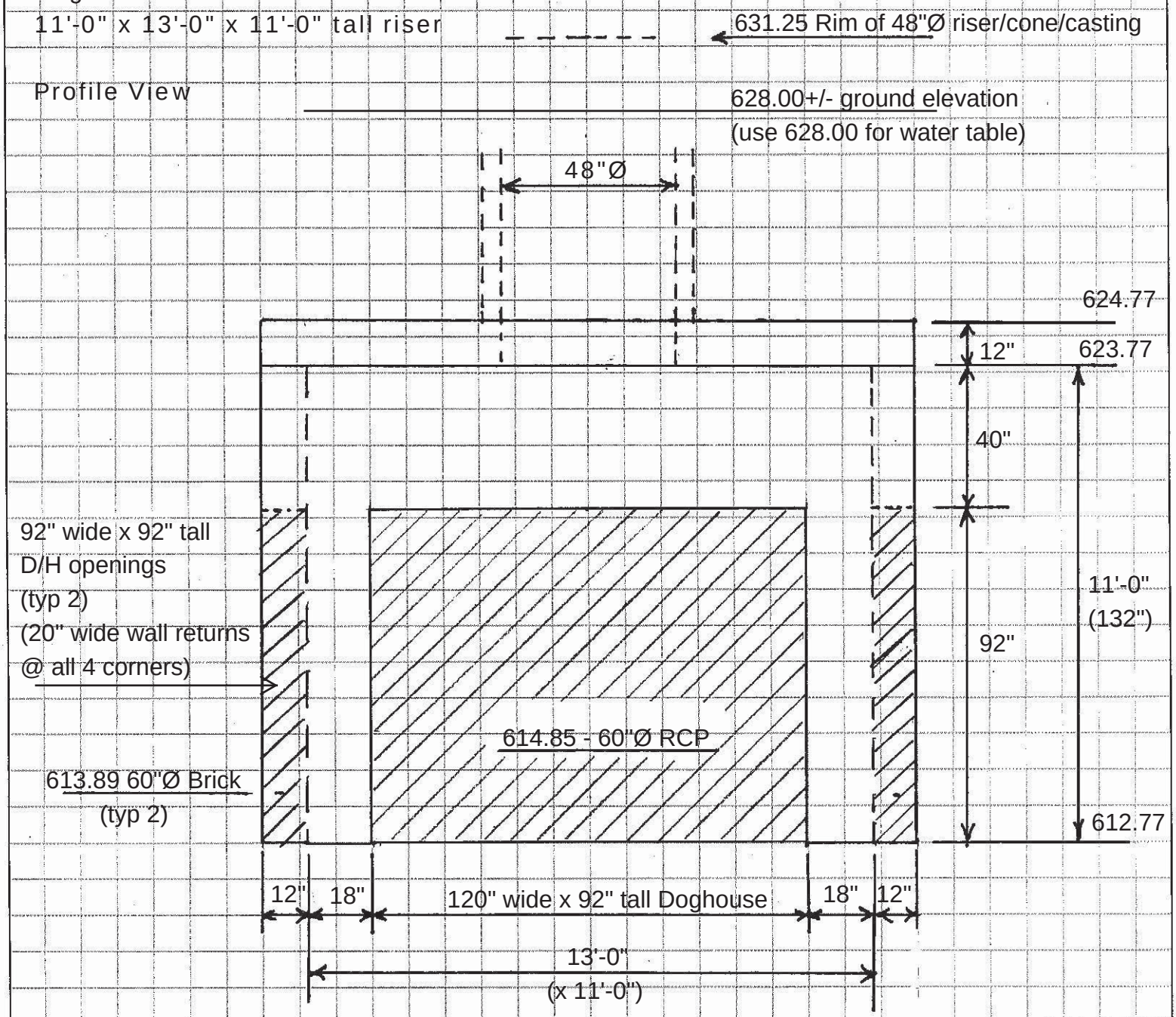

NPCA CERTIFIED PLANT

Mh 27A - Rev 1, Dated Feb 17, 2020

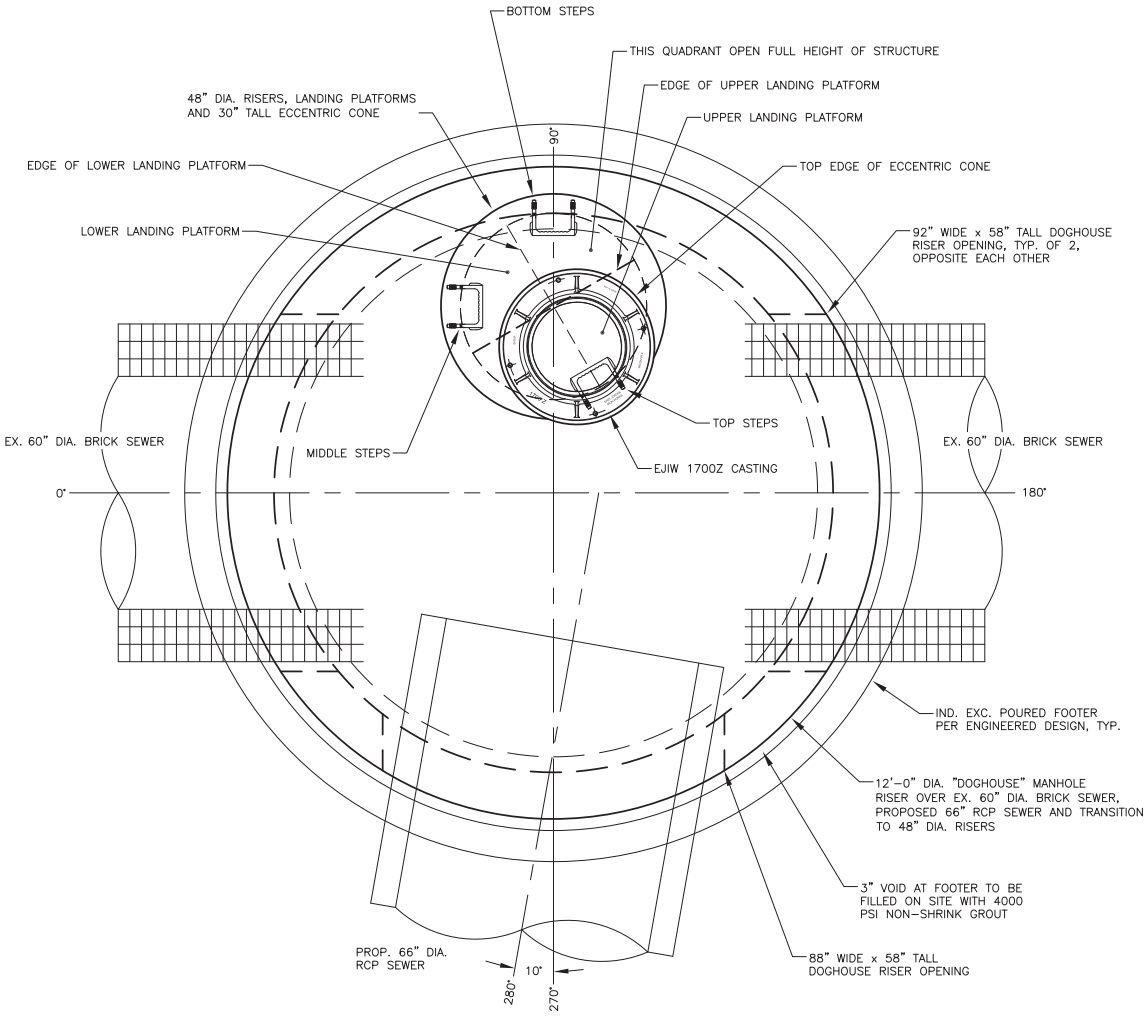

S-27A - BU-17A
PLAN VIEW

NOTES:
1.) CONCRETE MIN. 5,000 PSI @ 28 DAYS
2.) REINFORCING GRADE 60 ASTM A615-A617 60,000 PSI YIELD STRENGTH
3.) HS-20 LOADING
4.) ALL MANHOLE SECTIONS SHALL CONFORM TO THE PROVISIONS OF ASTM C-478
5.) RUBBER GASKETED JOINTS SHALL CONFORM TO THE PROVISIONS OF ASTM C-443.
6.) EX. 78" DIA. SEWER SIZE, COMPOSITION AND WALL THICKNESS TO BE CONFIRMED BY OTHERS.

REVISIONS

NO.	DESCRIPTION	DATE	BY
1.	12' DIA. DOGHOUSE RISER	2/17/20	DJF
2.			
3.			
4.			
5.			
6.			
7.			

Lindsay PRECAST

THIS DRAWING IS THE PROPRIETARY PROPERTY OF LINDSAY PRECAST. REPRODUCTION, DISCLOSURE OR USE OF ANY PART OF THIS DRAWING OR ANY INFORMATION THEREIN IS EXPRESSLY PROHIBITED WITHOUT PRIOR WRITTEN CONSENT OF LINDSAY PRECAST.

CUSTOMER: INDEPENDENCE EXCAVATING, INC.
JOB: OPPORTUNITY CORRIDOR – PHASE 3

DRAWN BY:	CHECKED BY:	SCALE:	DATE:	JOB NO:	DWG. NO:
DJF	RH	3/8"=1'-0"	2/17/20	173408	LP-003

Mh 27A - Rev 1, Dated Feb 17, 2020

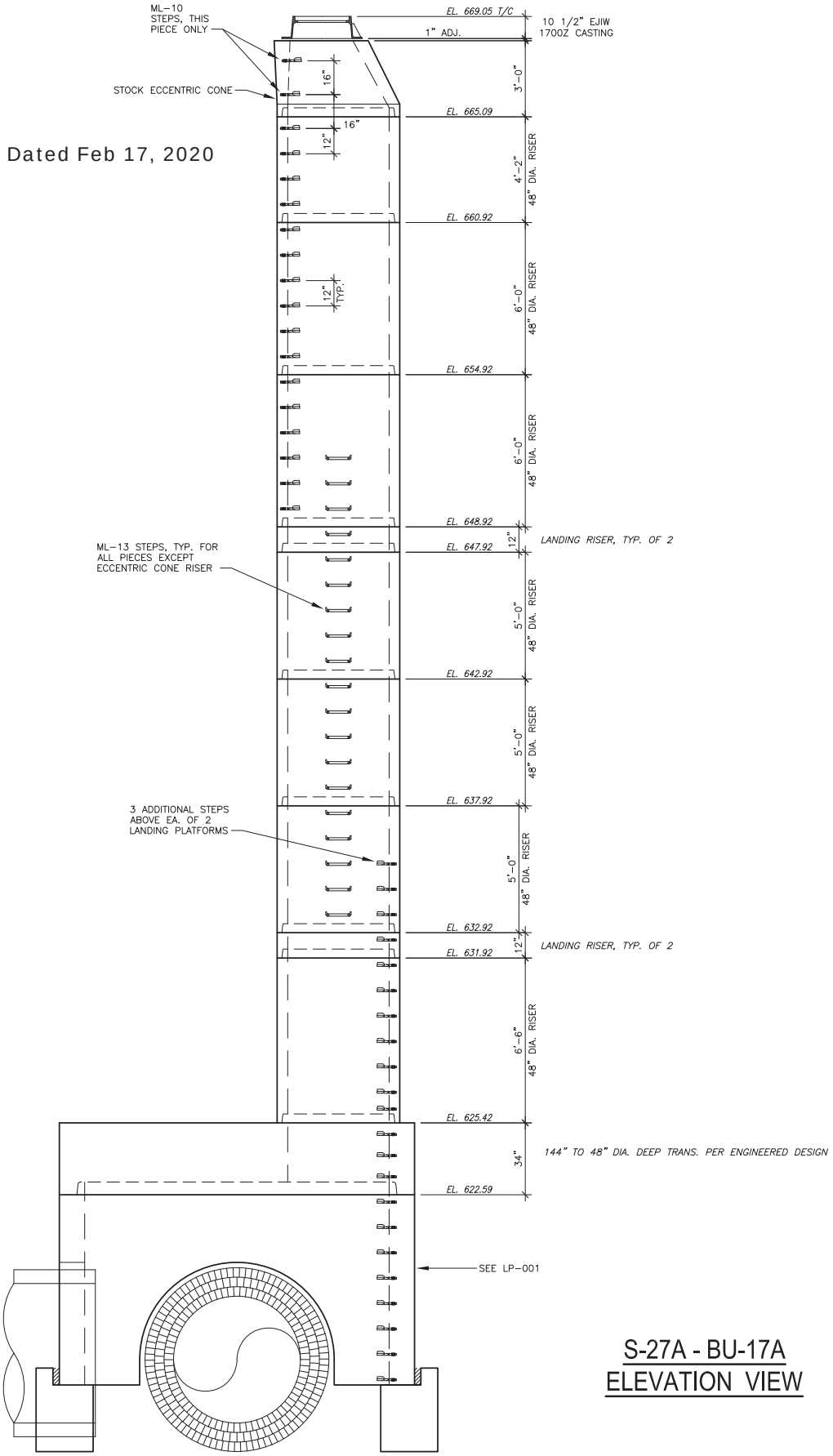

S-27A - BU-17A
ELEVATION VIEW

REVISIONS			
NO.	DESCRIPTION	DATE	BY
1.	12" DIA. DOGHOUSE RISER	2/17/20	DJF
2.			
3.			
4.			
5.			
6.			
7.			

Lindsay PRECAST

THIS DRAWING IS THE PROPRIETARY PROPERTY OF LINDSAY PRECAST. REPRODUCTION, DISCLOSURE OR USE OF ANY PART OF THIS DRAWING OR ANY INFORMATION THEREIN IS EXPRESSLY PROHIBITED WITHOUT PRIOR WRITTEN CONSENT OF LINDSAY PRECAST.

CUSTOMER: INDEPENDENCE EXCAVATING, INC.

JOB: OPPORTUNITY CORRIDOR – PHASE 3

DRAWN BY:	CHECKED BY:	SCALE:	DATE:	JOB NO:	DWG NO:
DJF	RH	1/4"=1'-0"	2/17/20	173408	LP-002

Mh 27A - Rev 1, Dated Feb 17, 2020

Transition: 50k lbs
Base: 33k lbs

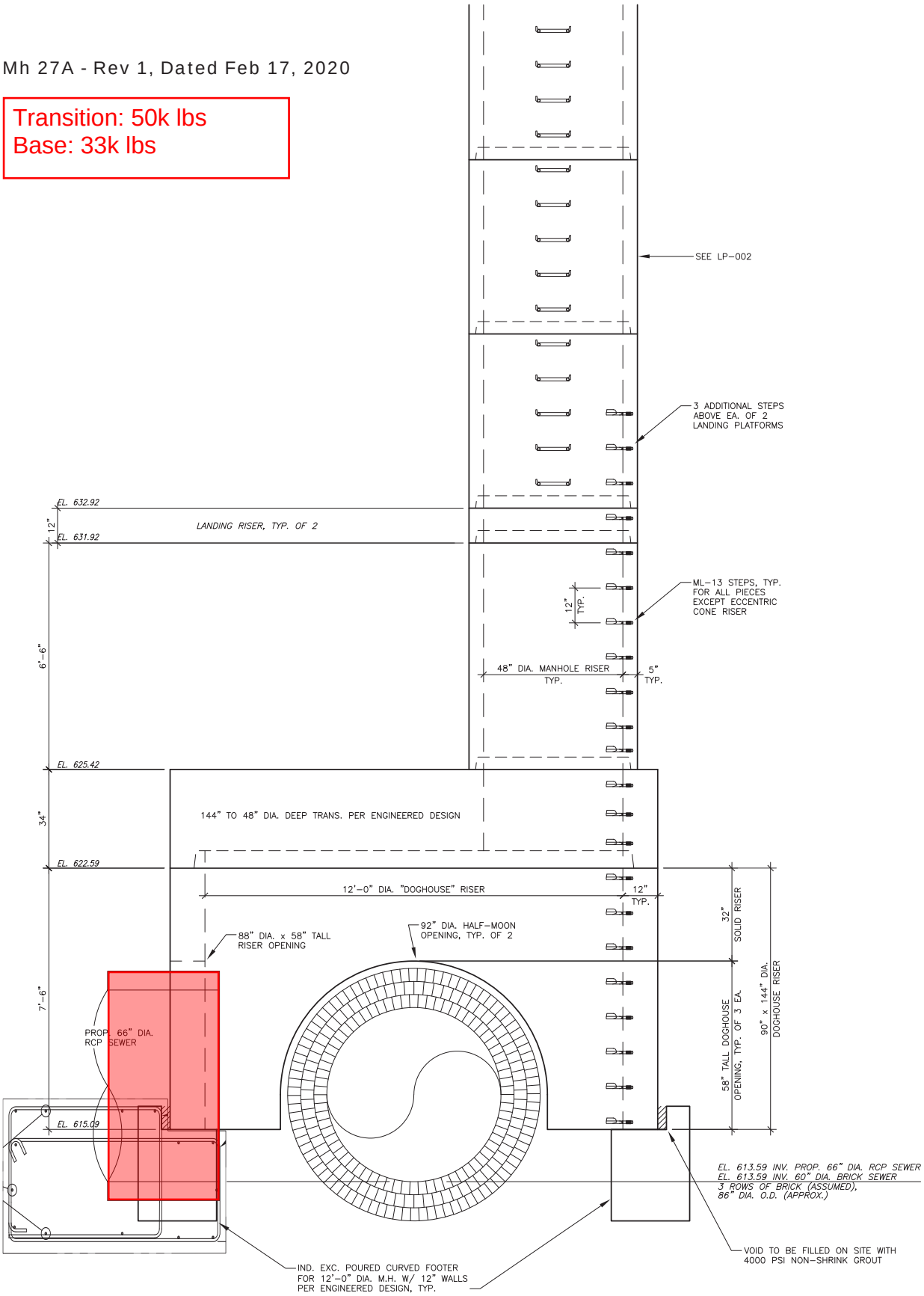

S-27A - BU-17A
ELEVATION VIEW

NOTES:
1.) CONCRETE MIN. 5,000 PSI @ 28 DAYS
2.) REINFORCING GRADE 60 ASTM A615-A617 60,000 PSI YIELD STRENGTH
3.) HS-20 LOADING
4.) ALL MANHOLE SECTIONS SHALL CONFORM TO THE PROVISIONS OF ASTM C-478
5.) RUBBER GASKETED JOINTS SHALL CONFORM TO THE PROVISIONS OF ASTM C-443.
6.) EX. 78" DIA. SEWER SIZE, COMPOSITION AND WALL THICKNESS TO BE CONFIRMED BY OTHERS.

REVISIONS

NO.	DESCRIPTION	DATE	BY
1.	12' DIA. DOGHOUSE RISER	2/17/20	DJF
2.			
3.			
4.			
5.			
6.			
7.			

Lindsay PRECAST

THIS DRAWING IS THE PROPRIETARY PROPERTY OF LINDSAY PRECAST. REPRODUCTION, DISCLOSURE OR USE OF ANY PART OF THIS DRAWING OR ANY INFORMATION THEREIN IS EXPRESSLY PROHIBITED WITHOUT PRIOR WRITTEN CONSENT OF LINDSAY PRECAST.

CUSTOMER: INDEPENDENCE EXCAVATING, INC.
JOB: OPPORTUNITY CORRIDOR – PHASE 3

DRAWN BY:	CHECKED BY:	SCALE:	DATE:	JOB NO:	DWG NO:
DJF	RH	3/8"=1'-0"	2/17/20	173408	LP-001

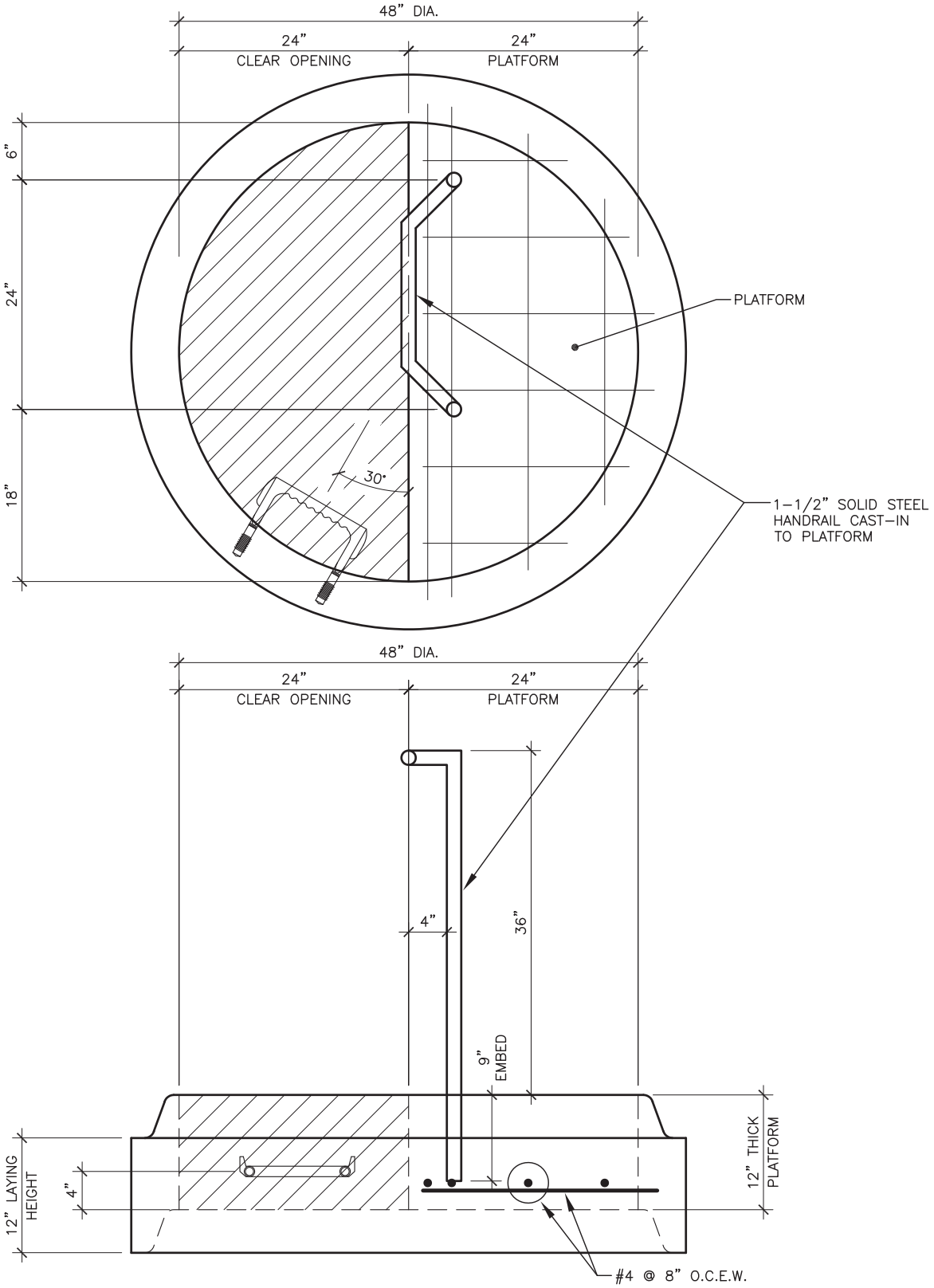

48" DIA. LANDING PLATFORM RISER

NOTES:
1.) CONCRETE MIN. 5,000 PSI @ 28 DAYS
2.) REINFORCING GRADE 60 ASTM A615-A617
60,000 PSI YIELD STRENGTH
3.) HS-20 LOADING
4.) 1 STEP AS DETAILED

REVISIONS			
NO.	DESCRIPTION	DATE	BY
1.			
2.			
3.			
4.			
5.			
6.			
7.			

Lindsay PRECAST

THIS DRAWING IS THE PROPRIETARY PROPERTY OF LINDSAY PRECAST. REPRODUCTION, DISCLOSURE OR USE OF ANY PART OF THIS DRAWING OR ANY INFORMATION THEREIN IS EXPRESSLY PROHIBITED WITHOUT PRIOR WRITTEN CONSENT OF LINDSAY PRECAST.

CUSTOMER: INDEPENDENCE EXCAVATING, INC.
JOB: ODOT 173000 OPP CORRIDOR PH 3

DRAWN BY:	CHECKED BY:	SCALE:	DATE:	JOB NO:	DWG NO:
DJF	RH	3/4"=1'-0"	10/8/19	173408	LP-001

Submittal: 044

Revision: 1
Date Submitted: 2/19/2020
Response Due By: 3/4/2020

kokosing CONSTRUCTION COMPANY, INC.
886 McKinley Ave.
Columbus, OH 43222
Phone: (614) 228-1029
Fax: (614) 228-7065

Project: ODOT 3000(17) – Opportunity Corridor 3
Description: NO 8 LH and RH RBM Turnouts

To: Chris Coppock, P.E.
GCRTA – Track Engineer
Email: Christopher.Coppock@gcrta.org

From: Oliver Bluestone
Kokosing Construction Company, Inc.
Email: obluestone@kokosing.biz

Submittal Type:	Submitted For:
☐ Engineered Drawings	☒ Approval
☒ Shop Drawings	☐ Record
☐ Working Drawings	☐ Other Verification
☐ CPM Schedule	
☐ Material Certifications / Test Results	**Sent Via:**
☐ Reports	☒ Attached (Electronic)
☐ Product Data/Samples	☐ Attached (Hard Copy)
☐ Other:	

Submittal #	Copies	Spec #	Rev. #	Description	Status
044	1		1	044 – NO 8 LH and RH RBM Turnouts	For Approval

Comments:

Please see the included revised submittal drawings for No. 8 RBM Turnouts received from Rail Works for review/approval.

The following adjustments have been made:

- Change from horizontal insulated switch rods w/adj side jaw clips to vertical insulated switch rods w/rocker clips
- Change from knife switch points & stock rails to Samson switch points & stock rails
- Change from pressed steel weld-on shoulders to forged steel weld-on shoulders

Please feel free to contact me with any questions or concerns regarding this submittal.

Signed: _____

SUBMITTAL COVER SHEET

First Submittal [ ] Date: _____

Submittal No.: **003.1**

Resubmitted [X] Date: 02/18/2020

Project: Opportunity Corridor
ODOT 173000

Contractor:

Address: RailWorks Track Services, Inc.
512 Twin Rail Dr. Minooka, IL 60447

PH / Fax: 815-441-5219

Subcontractor _____

Shop Drawing Title: No.8 RBM Turnout

Submittal Description: No.8 RBM Turnout

[ ] Product Data [ ] Test [ ] Schedules [ ] Samples

Manufacturer: _____

REFERENCES:

Spec Section (s): _____ Drawing Number (s): _____

Spec Title: _____ Detail Number (s): _____

ADDITIONAL REMARKS

Date Required on Site:

CONTRACTOR'S APPROVAL

Date: 02.18.20 By: Nithya Rajendran

[X] Submitted product has been reviewed for Release to Architect/Engineer and

[X] Submitted product is as specified

[ ] Submitted product is equal to specified product.

RailWorks Track Services Hereby certifies that this submittal has been reviewed and verified to be in accordance with drawings and specifications as noted. Deviations, if applicable, are as noted.

Signed: Nithya

APPROVAL:

THE DOCUMENT AND THE DATA DISCLOSED HERE IN OR HERE WITH IS NOT TO BE REPRODUCED, USED, OR DISCLOSED IN WHOLE OR IN PART TO ANYONE WITHOUT THE PERMISSION OF UNITRAC RAILROAD MATERIALS.

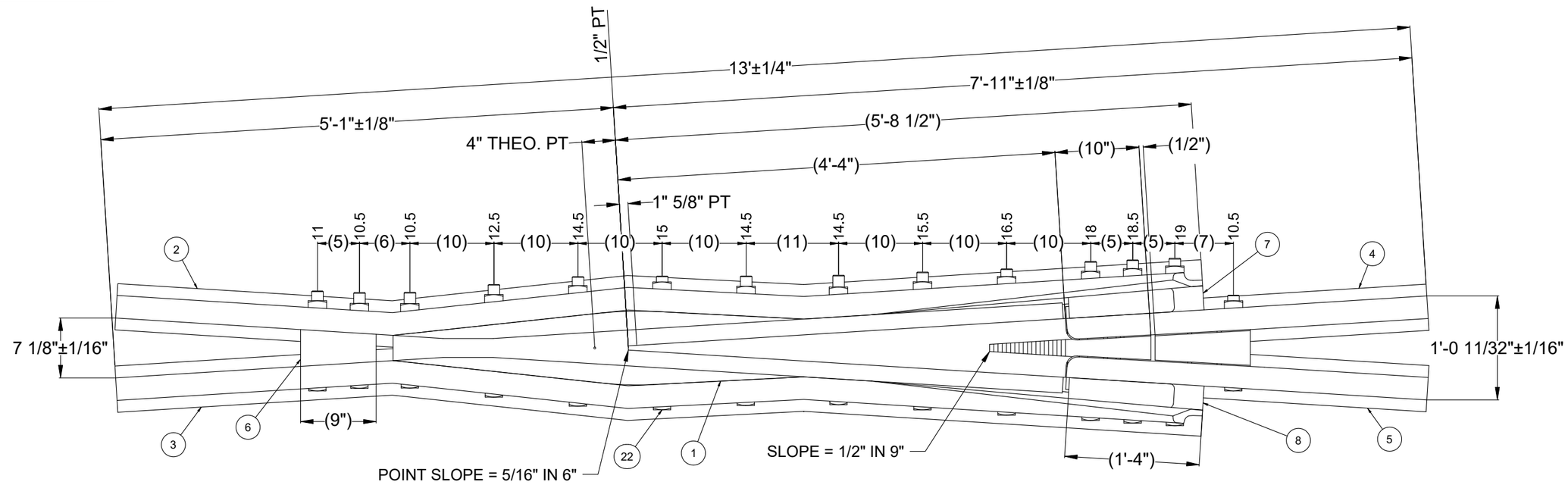

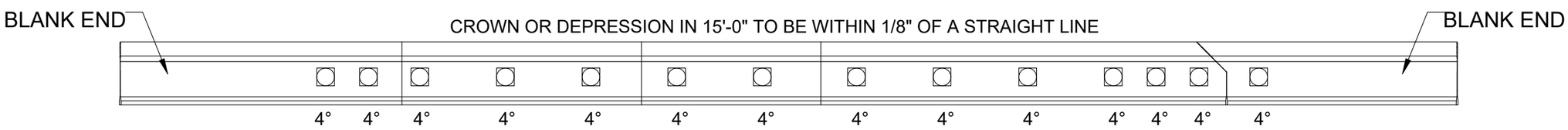

Parts List

ITEM	QTY	PART NUMBER	DESCRIPTION
1	1	FCM11508A00	FROG RBMI_MACH_115RE_08_EDH_A_90_.625_AREA STD_AREA 622 09
2	1	RW1403	RAIL WING_115RE_10 9.313_LH_08_90_HH_AREA 622 03_BLANK END
3	1	RW1404	RAIL WING_115RE_10 9.313_RH_08_90_HH_AREA 622 03_BLANK END
4	1	RH1405	RAIL HEEL_115RE_3 6.875_LH_08_90_HH_AREA 622 03_BLANK END
5	1	RH1406	RAIL HEEL_115RE_3 6.875_RH_08_90_HH_AREA 622 03_BLANK END
6	1	FTB11508	TOE BLOCK RBMI_115RE_CAST_08_9.000_2_AREA 622 03_DOMESTIC
7	1	FFC115RELH	FILLER RBMI_115RE_LH_90_CAST_STR_6-12_16_AREA_DOMESTIC
8	1	FFC115RERH	FILLER RBMI_115RE_RH_90_CAST_STR_6-12_16_AREA_DOMESTIC
9	3	TB-G8SHV1050LB	BOLT SQ_1.375_10.500_GRADE 8
10	1	TB-G8SHV1100LB	BOLT SQ_1.375_11.000_GRADE 8
11	1	TB-G8SHV1250LB	BOLT SQ_1.375_12.500_GRADE 8
12	3	TB-G8SHV1450LB	BOLT SQ_1.375_14.500_GRADE 8
13	1	TB-G8SHV1500LB	BOLT SQ_1.375_15.000_GRADE 8
14	1	TB-G8SHV1550LB	BOLT SQ_1.375_15.500_GRADE 8
15	1	TB-G8SHV1650LB	BOLT SQ_1.375_16.500_GRADE 8
16	1	TB-G8SHV1800LB	BOLT SQ_1.375_18.000_GRADE 8
17	1	TB-G8SHV1850LB	BOLT SQ_1.375_18.500_GRADE 8
18	1	TB-G8SHV1900LB	BOLT SQ_1.375_19.000_GRADE 8
19	14	LN-115CO7-1051	BEVEL WASHER_115_4DEG
20	14	LN-115CO7-1050	WASHER HEAD LOCK_115_4DEG
21	14	LNV-AREA	WASHER LOCK_1.438_2.500_0.500
22	1	FNIDTAG	ID TAG_FROG

NOTES:

1. CUT HEEL EXTENSION OFF AT 10"
2. MANGANESE CASTING TO BE EDH
3. FRACTIONAL TOLERANCES NOT GIVEN ARE ±1/32"
4. TOLERANCES NOT SUPPLIED ARE PER AREMA 1021-03 OR LATEST REVISION

UNLESS OTHERWISE SPECIFIED DIMENSIONS ARE IN INCHES				DRAWN S.KENT	2/7/2020
				CHECK C.TAYLOR	2/10/2020
.X ± .125	.XX ± .063	.XXX ± .031	ANGLE ± 1/4°	SHEET 1 OF 4	SIZE B

C:\UNITRAC\FROGS\#08\FNRB11508A012E

UNITRAC RAILROAD MATERIALS

PO BOX 7098
KNOXVILLE, TN 37921

TITLE
FROG RBMI_115RE_08_13_HH_EDH_A_90_.625_AREA STD_AREA 622 03_BLANK ENDS

IN MAS	DRAWING NO.	REV
2/10/2020	FNRB11508A012E	----

THE DOCUMENT AND THE DATA DISCLOSED HERE IN OR HERE WITH IS NOT TO BE REPRODUCED, USED, OR DISCLOSED IN WHOLE OR IN PART TO ANYONE WITHOUT THE PERMISSION OF UNITRAC RAILROAD MATERIALS INC.

REVISION HISTORY

REV	DATE	REV AUTHOR	CHECKED DATE	CHECKED BY	ECR#	CHANGE NOTE
C	11/17/2017	J.RHYNE	11/17/2017	S.KENT	1276	SIDE BEND DIMENSION 84 15/16 WAS 83 27/32

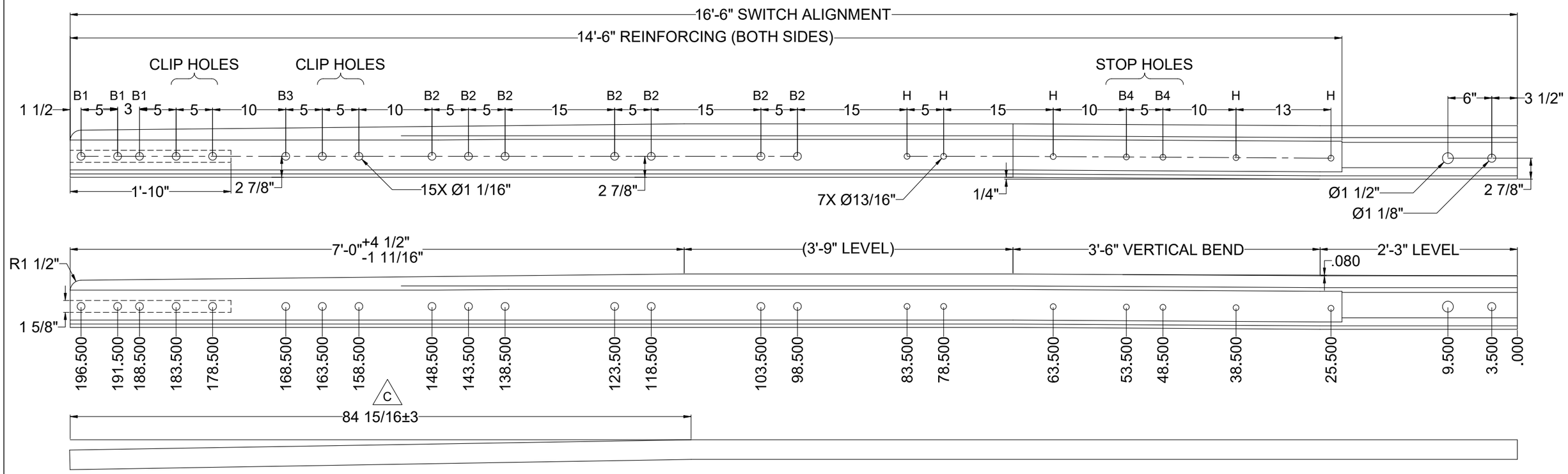

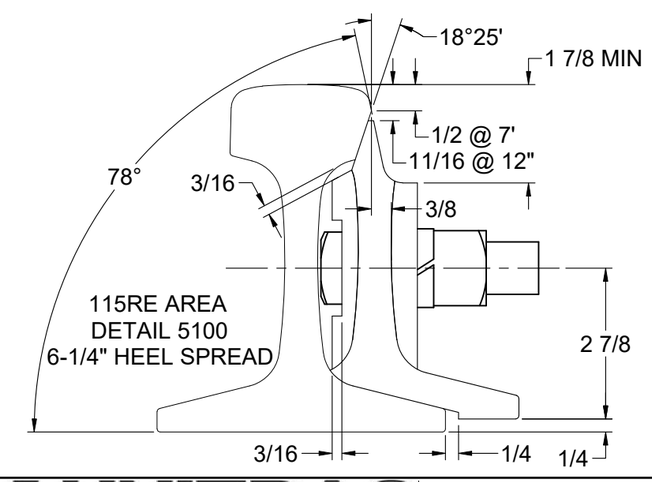

Parts List

ITEM	QTY	PART NUMBER	DESCRIPTION	LOCATION
1	1	RN115REHH	RAIL NEW_115RE_HH	
2	2	SPPN-R115RE0500	SWITCH POINT_REINF_115RE_.500	
3	3	TB-G8THP0350	BOLT THIN_1.000_3.500	B1
4	7	TB-G8SHP0375	BOLT SQ_1.000_3.750	B2
5	1	TB-G8THP0375	BOLT THIN_1.000_3.750	B3
6	2	TB-G8SHK0425	BOLT SQ_.750_4.250	B4
7	5	TB-HUCKPINSP	BOLT HUCK_.750_1.500-1.750	H
8	11	LNP-AREA	WASHER LOCK_1.000_.500	
9	2	LNK-AREA	WASHER LOCK_.750_.500	
10	5	TB-HUCKCOLL	NUT HUCK_.750	
11	1	SPPN-IDTAGS	ID TAG_SWITCH POINT	
12	1	SPPN-SPSTOPS	SWITCH POINT STOP_3.375_2.500	

NOTES:
1. TOLERANCE PER AREMA PLAN #1020-03

UNLESS OTHERWISE SPECIFIED DIMENSIONS ARE IN INCHES

.X	.XX	.XXX	ANGLE
± .125	± .063	± .031	± 1/4°

DRAWN J.REED 1/29/2010
CHECK M.ROBERTS 2/1/2010
SHEET 1 OF 1
SIZE B

C:\UNITRAC\SWITCH POINTS\AREMA\SPN15HHS1660GSL

UNITRAC RAILROAD MATERIALS, INC.
PO BOX 7098
KNOXVILLE, TN 37921

TITLE
RAIL SP_115RE_16 6_16 6_HH_SL_SAM_GRAD_AREA 112 03

IN MAS	DRAWING NO.	REV
1/28/2013	SPN15HHS1660GSL	C

THE DOCUMENT AND THE DATA DISCLOSED HERE IN OR HERE WITH IS NOT TO BE REPRODUCED, USED, OR DISCLOSED IN WHOLE OR IN PART TO ANYONE WITHOUT THE PERMISSION OF UNITRAC RAILROAD MATERIALS INC.

REVISION HISTORY

REV	DATE	REV AUTHOR	CHECKED DATE	CHECKED BY	ECR#	CHANGE NOTE
C	11/17/2017	J.RHYNE	11/17/2017	S.KENT	1276	SIDE BEND DIMENSION 84 15/16 WAS 83 27/32

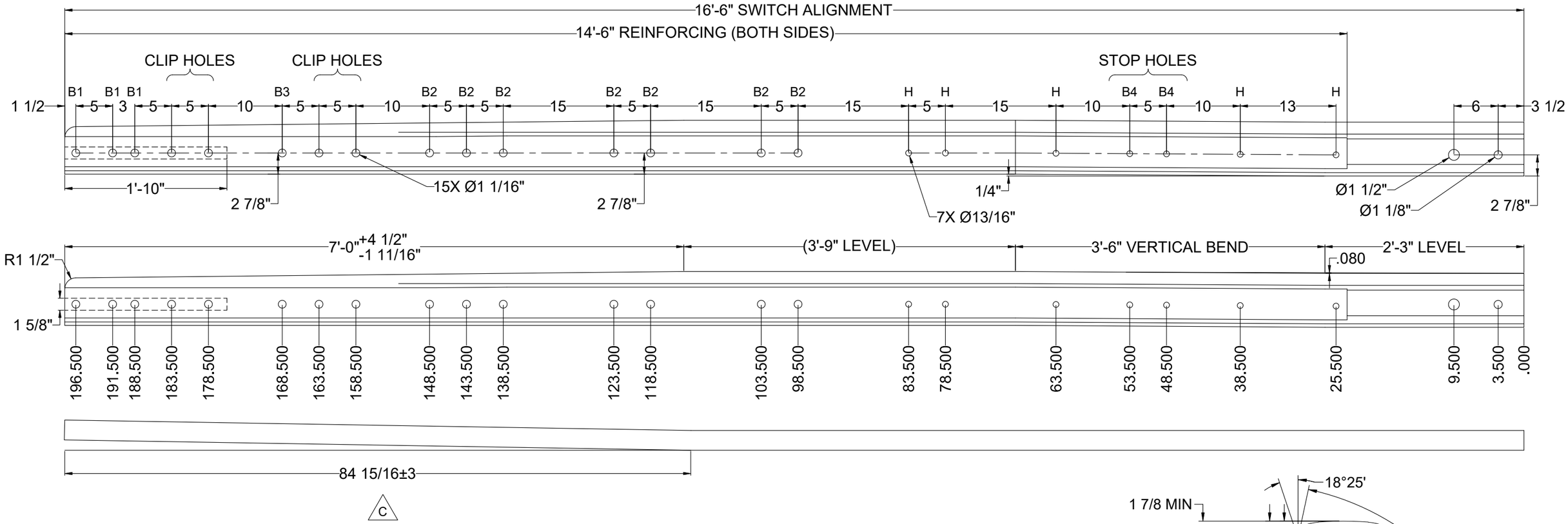

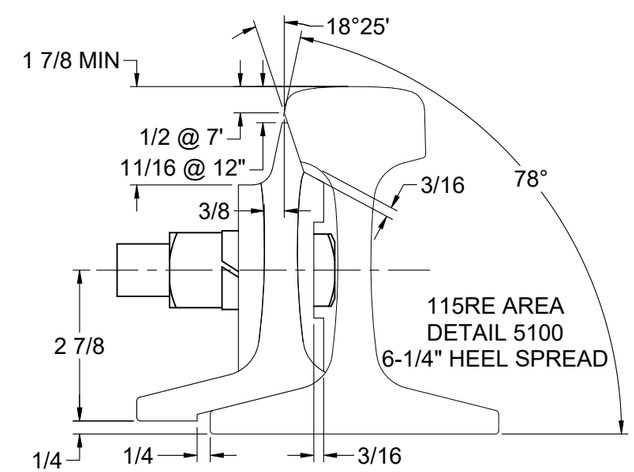

Parts List

ITEM	QTY	PART NUMBER	DESCRIPTION	LOCATION
1	1	RN115REHH	RAIL NEW_115RE_HH	
2	2	SPPN-R115RE0500	SWITCH POINT_REINF_115RE_.500	
3	3	TB-G8THP0350	BOLT THIN_1.000_3.500	B1
4	7	TB-G8SHP0375	BOLT SQ_1.000_3.750	B2
5	1	TB-G8THP0375	BOLT THIN_1.000_3.750	B3
6	2	TB-G8SHK0425	BOLT SQ_.750_4.250	B4
7	5	TB-HUCKPINSP	BOLT HUCK_.750_1.500-1.750	H
8	11	LNP-AREA	WASHER LOCK_1.000_.500	
9	2	LNK-AREA	WASHER LOCK_.750_.500	
10	5	TB-HUCKCOLL	NUT HUCK_.750	
11	1	SPPN-IDTAGS	ID TAG_SWITCH POINT	
12	1	SPPN-SPSTOPS	SWITCH POINT STOP_3.375_2.500	

NOTES:
1. TOLERANCE PER AREMA PLAN #1020-03

UNLESS OTHERWISE SPECIFIED DIMENSIONS ARE IN INCHES

.X	.XX	.XXX	ANGLE
± .125	± .063	± .031	± 1/4°

DRAWN J.REED 1/29/2010
CHECK M.ROBERTS 2/1/2010
SHEET 1 OF 1
SIZE B

C:\UNITRAC\SWITCH POINTS\AREMA\SPN15HHS1660GSR

UNITRAC RAILROAD MATERIALS, INC.
PO BOX 7098
KNOXVILLE, TN 37921

TITLE
RAIL SP_115RE_16 6_16 6_HH_SR_SAM_GRAD_AREA 112 03

IN MAS 1/28/2013
DRAWING NO. SPN15HHS1660GSR
REV C

THE DOCUMENT AND THE DATA DISCLOSED HERE IN OR HERE WITH IS NOT TO BE REPRODUCED, USED, OR DISCLOSED IN WHOLE OR IN PART TO ANYONE WITHOUT THE PERMISSION OF UNITRAC RAILROAD MATERIALS.

BENT RIGHT

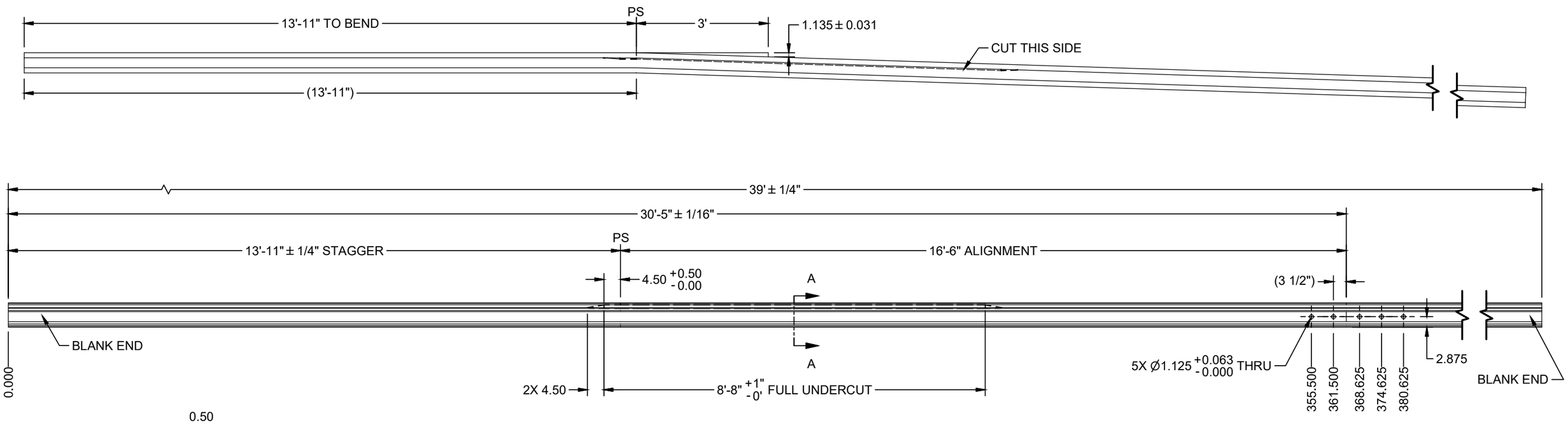

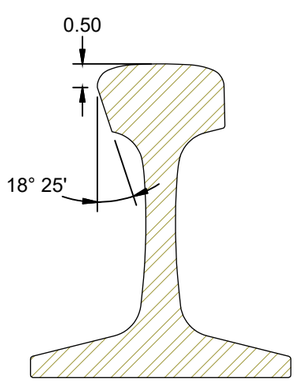

SECTION A-A

NOTES:
1. MAKE CUTS OPPOSITE RAIL BRAND
2. ALL FRACTIONAL TOLERANCES NOT LISTED ARE ±1/32

ASSEMBLY - BILL OF MATERIAL

ITEM	QTY	PART NUMBER	DESCRIPTION
1	1	RN115REHH	RAIL NEW_115RE_HH
2	1	SRN-IDTAGS	ID TAG_STOCK RAIL

UNLESS OTHERWISE SPECIFIED DIMENSIONS ARE IN INCHES				DRAWN S.KENT	2/14/2020
				CHECK C.TAYLOR	2/17/2020
.X ± .125	.XX ± .063	.XXX ± .031	ANGLE ± 1/4°	SHEET 1 OF 1	SIZE B

C:\Unitrac\Stock Rails\AREMA\SRN1912.idw

UNITRAC RAILROAD MATERIALS
PO BOX 7098
KNOXVILLE, TN 37921

TITLE
RAIL STOCK_115RE_16 6_39_HH_BR_SAM_GRAD_AREA 112 03_BLANK ENDS

IN MAS	DRAWING NO.	REV
2/17/2020	SRN1912	

THE DOCUMENT AND THE DATA DISCLOSED HERE IN OR HERE WITH IS NOT TO BE REPRODUCED, USED, OR DISCLOSED IN WHOLE OR IN PART TO ANYONE WITHOUT THE PERMISSION OF UNITRAC RAILROAD MATERIALS INC.

STRAIGHT RIGHT

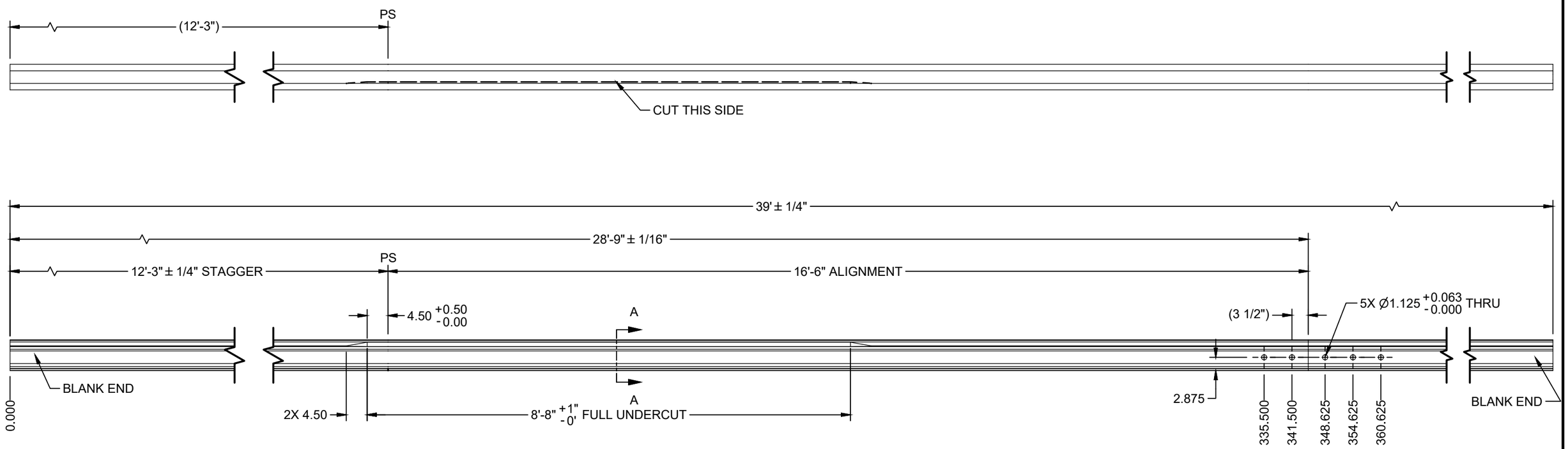

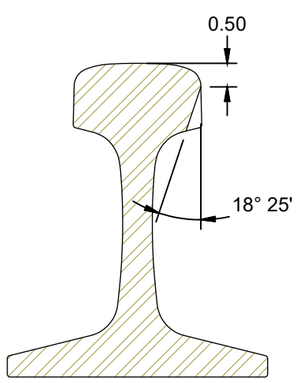

SECTION A-A

NOTES:
1. MAKE CUTS OPPOSITE RAIL BRAND
2. ALL FRACTIONAL TOLERANCES NOT LISTED ARE ±1/32

ASSEMBLY - BILL OF MATERIAL

ITEM	QTY	PART NUMBER	DESCRIPTION
1	1	RN115REHH	RAIL NEW_115RE_HH
2	1	SRN-IDTAGS	ID TAG_STOCK RAIL

UNLESS OTHERWISE SPECIFIED DIMENSIONS ARE IN INCHES				DRAWN S.KENT	2/14/2020
				CHECK C.TAYLOR	2/17/2020
.X ± .125	.XX ± .063	.XXX ± .031	ANGLE ± 1/4°	SHEET 1 OF 1	SIZE B

C:\Unitrac\Stock Rails\AREMA\SRN1913.idw

UNITRAC RAILROAD MATERIALS, INC.
PO BOX 7098
KNOXVILLE, TN 37921

TITLE
RAIL STOCK_115RE_16 6_39_HH_SL_SAM_GRAD_AREA 112 03_BLANK ENDS

IN MAS	DRAWING NO.	REV
2/17/2020	SRN1913	

THE DOCUMENT AND THE DATA DISCLOSED HERE IN OR HERE WITH IS NOT TO BE REPRODUCED, USED, OR DISCLOSED IN WHOLE OR IN PART TO ANYONE WITHOUT THE PERMISSION OF UNITRAC RAILROAD MATERIALS.

SIGN OFF BLOCK

INITIALS AND DATE ALLOW PROCESS CONTINUATION

CHECK MATERIAL RECEIVED AGAINST PRINT

SAW CUT ENDS MUST BE CUT SQUARE WITHIN 1/16"

RECORD ACTUAL DIMENSIONS FOR 1ST AND LAST PART.

S.O. # _____

	INITIALS	DATE
SAW		
MILL		
STAMPING/ETCHING		
DRILLING		
WELDING		
ASSEMBLY		
PUNCHING		

COMMENTS _____

IF ANY DIMENSION DOES NOT MEET TOLERANCES ON THIS DRAWING STOP PROCESS AND NOTIFY SUPERVISOR

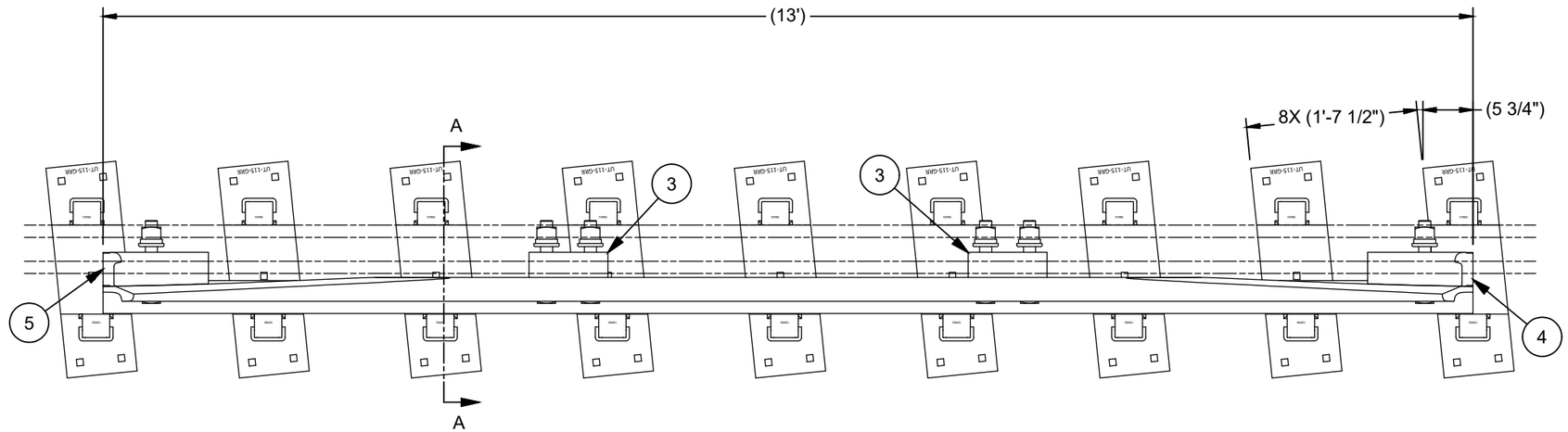

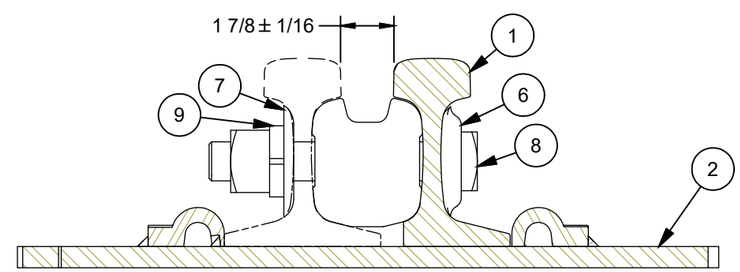

SECTION A-A

ASSEMBLY - BILL OF MATERIAL

ITEM	QTY	PART NUMBER	DESCRIPTION
1	1	GR9002-HH	GUARD RAIL_115RE_504_13_HH_STR_AREA 504 03
2	9	GRPN115AP504AR	PLATE GUARD ASSY_115RE_504_RH_PAN_FLAT_SQ_AREA 504 03_DOMESTIC
3	2	GRSB115RE	SEPERATOR BLOCK CAST_GUARDRAIL_115RE_1.875_UNIV_9.000_NA_AREA 504 03
4	1	GRFB115RELH	SEPERATOR BLOCK CAST_GUARD RAIL_115RE_1.875_LH_12.000_NA_AREA 504 03
5	1	GRFB115RERH	SEPERATOR BLOCK CAST_GUARD RAIL_115RE_1.875_RH_12.000_NA_AREA 504 03
6	6	LN-115CO7-1054	HEAD LOCK_115RE_0DEG
7	6	LN-115CO7-1055	BEVEL WASHER_115RE_0DEG
8	6	TB-G8SHV0850LB	BOLT SQ_1.375_8.500_GRADE 8
9	6	LNV-AREA	WASHER LOCK_1.375_1.438_2.500_0.500

UNLESS OTHERWISE SPECIFIED DIMENSIONS ARE IN INCHES

.X	.XX	.XXX	ANGLE
± .125	± .063	± .031	± 1/4°

C:\Unitrac\504 Guardrail\13'\GRNA1213.idw

DRAWN	C.TAYLOR	8/29/2019
CHECK	S.KENT	9/12/2019
SHEET	1 OF 1	SIZE B

UNITRAC RAILROAD MATERIALS
PO BOX 7098
KNOXVILLE, TN 37921

TITLE
GUARD RAIL ASSY_115RE_504_13_RH_PAN_SQ_HH_AREA 504 03_DOMESTIC

IN MAS	DRAWING NO.	REV
9/12/2019	GRNA1213	

THE DOCUMENT AND THE DATA DISCLOSED HERE IN OR HERE WITH IS NOT TO BE REPRODUCED, USED, OR DISCLOSED IN WHOLE OR IN PART TO ANYONE WITHOUT THE PERMISSION OF UNITRAC RAILROAD MATERIALS.

SIGN OFF BLOCK

INITIALS AND DATE ALLOW PROCESS CONTINUATION

CHECK MATERIAL RECEIVED AGAINST PRINT

SAW CUT ENDS MUST BE CUT SQUARE WITHIN 1/16"

RECORD ACTUAL DIMENSIONS FOR 1ST AND LAST PART.

S.O. # _____

	INITIALS	DATE
SAW		
MILL		
STAMPING/ETCHING		
DRILLING		
WELDING		
ASSEMBLY		
PUNCHING		

COMMENTS _____

IF ANY DIMENSION DOES NOT MEET TOLERANCES ON THIS DRAWING STOP PROCESS AND NOTIFY SUPERVISOR

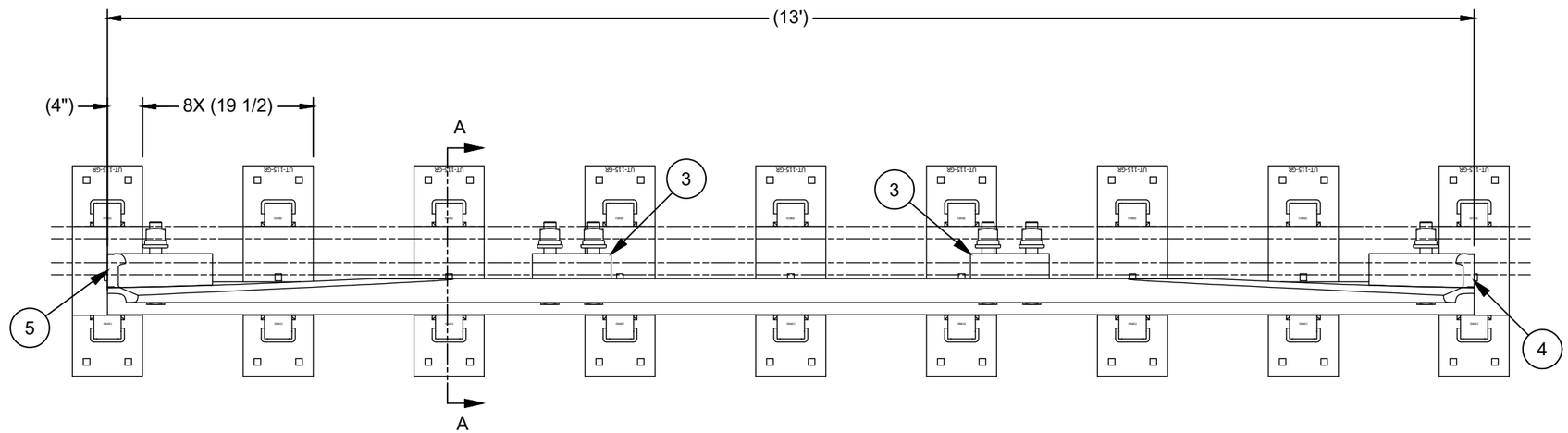

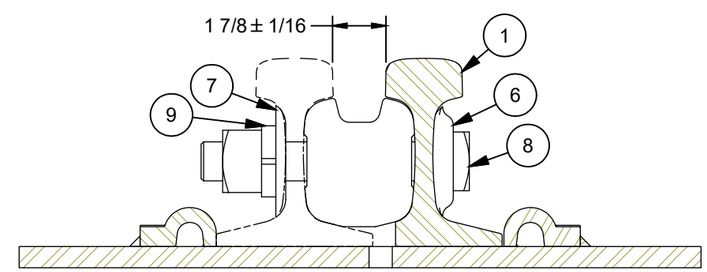

SECTION A-A

ASSEMBLY - BILL OF MATERIAL

ITEM	QTY	PART NUMBER	DESCRIPTION
1	1	GR9002-HH	GUARD RAIL_115RE_504_13_HH_STR_AREA 504 03
2	9	GRPN115AP504S	PLATE GUARD ASSY_115RE_504_STR_PAN_FLAT_SQ_AREA 504 03_DOMESTIC
3	2	GRSB115RE	SEPERATOR BLOCK CAST_GUARDRAIL_115RE_1.875_UNIV_9.000_NA_AREA 504 03
4	1	GRFB115RELH	SEPERATOR BLOCK CAST_GUARD RAIL_115RE_1.875_LH_12.000_NA_AREA 504 03
5	1	GRFB115RERH	SEPERATOR BLOCK CAST_GUARD RAIL_115RE_1.875_RH_12.000_NA_AREA 504 03
6	6	LN-115CO7-1054	HEAD LOCK_115RE_0DEG
7	6	LN-115CO7-1055	BEVEL WASHER_115RE_0DEG
8	6	TB-G8SHV0850LB	BOLT SQ_1.375_8.500_GRADE 8
9	6	LNV-AREA	WASHER LOCK_1.375_1.438_2.500_0.500

UNLESS OTHERWISE SPECIFIED DIMENSIONS ARE IN INCHES

.X	.XX	.XXX	ANGLE
± .125	± .063	± .031	± 1/4°

DRAWN	C.TAYLOR	8/29/2019
CHECK	S.KENT	9/12/2019
SHEET	1 OF 1	SIZE B

C:\Unitrac\504 Guardrail\13'\GRNA1214.idw

UNITRAC RAILROAD MATERIALS
PO BOX 7098
KNOXVILLE, TN 37921

TITLE
GUARD RAIL ASSY_115RE_504_13_STR_PAN_SQ_HH_AREA 504 03_DOMESTIC

IN MAS	DRAWING NO.	REV
9/12/2019	GRNA1214	

THE DOCUMENT AND THE DATA DISCLOSED HERE IN OR HERE WITH IS NOT TO BE REPRODUCED, USED, OR DISCLOSED IN WHOLE OR IN PART TO ANYONE WITHOUT THE PERMISSION OF UNITRAC RAILROAD MATERIALS INC.

SIGN OFF BLOCK

INITIALS AND DATE ALLOW PROCESS CONTINUATION

CHECK MATERIAL RECEIVED AGAINST PRINT

SAW CUT ENDS MUST BE CUT SQUARE WITHIN 1/16"

RECORD ACTUAL DIMENSIONS FOR 1ST AND LAST PART.

S.O. # _____

	INITIALS	DATE
SAW		
MILL		
STAMPING/ETCHING		
DRILLING		
WELDING		
ASSEMBLY		
PUNCHING		

COMMENTS _____

IF ANY DIMENSION DOES NOT MEET TOLERANCES ON THIS DRAWING STOP PROCESS AND NOTIFY SUPERVISOR

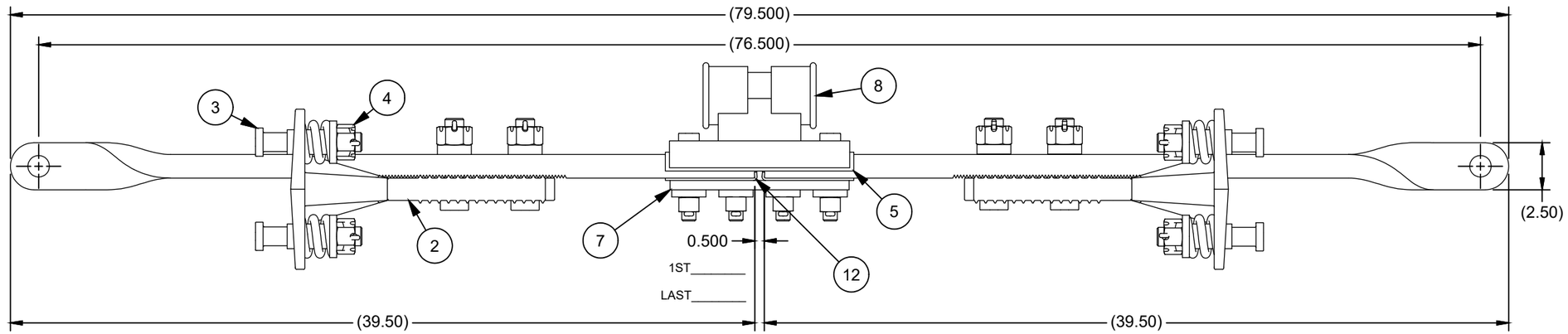

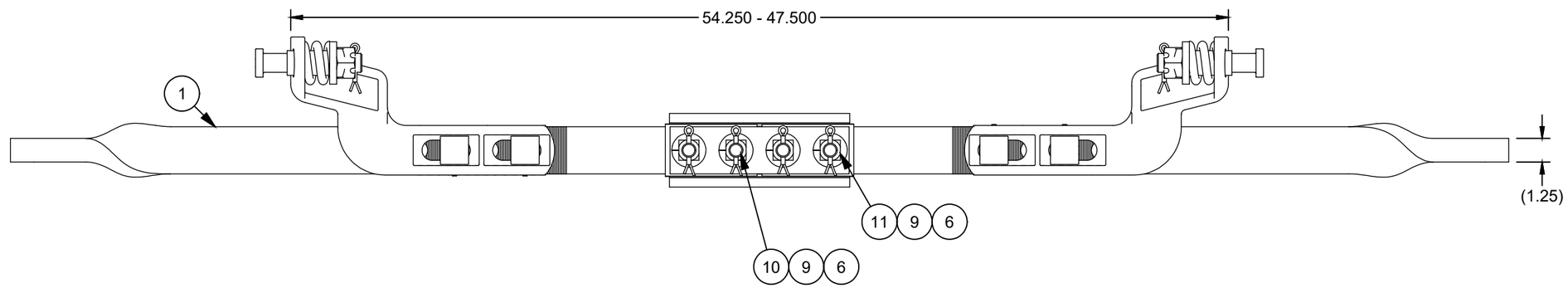

CONTINUITY TESTING:
NO LESS THAN 10 MegOhm at 500 VOLTS

1ST_____

LAST_____

VERIFY PRESENCE OF THIMBLE AS INDICATED

VERIFIED BY: _____

DATE: _____

ASSEMBLY - BILL OF MATERIAL

ITEM	QTY	PART NUMBER	DESCRIPTION
1	2	ROD1132	ROD MILLED_1.250_2.500_39.500_TWISTED
2	2	SPPN-RCBNSF278A	ROCKER CLIP ASSY_BNSF 241602-AREA 222 08_CLIP AB 2 7/8
3	4	TB-G8THP0525	BOLT THIN_1.000_5.250
4	4	TB-PCASTLE	NUT CASTLE_1.00
5	1	SPPN-CRICHANNEL	SWITCH ROD_INS CHANNEL_CR 73518 G
6	4	SPPN-INSBUSH125	SWITCH ROD_INS BUSHING_1.000_1.469
7	1	SPPN-SPLICEPLTE	SWITCH ROD_SPLICE PLATE_.500_2.500_9.500
8	1	SPPN-SWRODBNSF	SWITCH ROD_BASKET_BNSF/CS/UP 241601
9	4	LNK-DD	WASHER LOCK_.750_.375
10	2	TB-G8SHK0425	BOLT SQ_.750_4.250
11	2	TB-G8THK0425	BOLT THIN_.750_4.250
12	2	GN-INSPLATEBNSF	FIBER CHANNEL_INS PLATE_.125_2.500_4.875

UNLESS OTHERWISE SPECIFIED DIMENSIONS ARE IN INCHES

.X	.XX	.XXX	ANGLE
± .125	± .063	± .031	± 1/4°

DRAWN	J.RHYNE	5/17/2017
CHECK	H.BLADE	5/24/2017
SHEET	1 OF 1	SIZE B

C:\Unitrac\Switch Rods Insulated\#1 Rod\SWR1072.idw

UNITRAC RAILROAD MATERIALS, INC.

PO BOX 7098
KNOXVILLE, TN 37921

TITLE
SWITCH ROD_1_INS_1.250_ROCKER_AREA 222 08_BASKET_CLIP AB 2 7/8

IN MAS	DRAWING NO.	REV
5/24/2017	SWR1072	

THE DOCUMENT AND THE DATA DISCLOSED HERE IN OR HERE WITH IS NOT TO BE REPRODUCED, USED, OR DISCLOSED IN WHOLE OR IN PART TO ANYONE WITHOUT THE PERMISSION OF UNITRAC RAILROAD MATERIALS INC.

SIGN OFF BLOCK

INITIALS AND DATE ALLOW PROCESS CONTINUATION

CHECK MATERIAL RECEIVED AGAINST PRINT

SAW CUT ENDS MUST BE CUT SQUARE WITHIN 1/16"

RECORD ACTUAL DIMENSIONS FOR 1ST AND LAST PART.

S.O. # _____

	INITIALS	DATE
SAW		
MILL		
STAMPING/ETCHING		
DRILLING		
WELDING		
ASSEMBLY		
PUNCHING		

COMMENTS _____

IF ANY DIMENSION DOES NOT MEET TOLERANCES ON THIS DRAWING STOP PROCESS AND NOTIFY SUPERVISOR

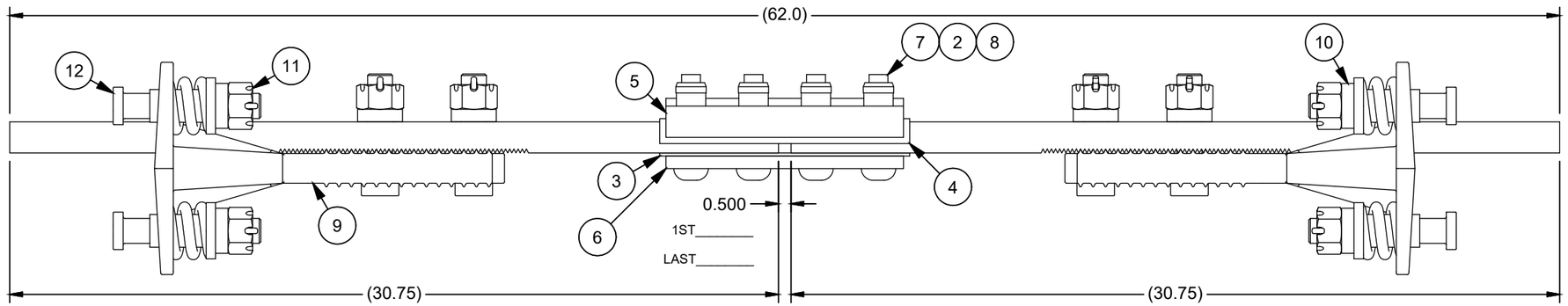

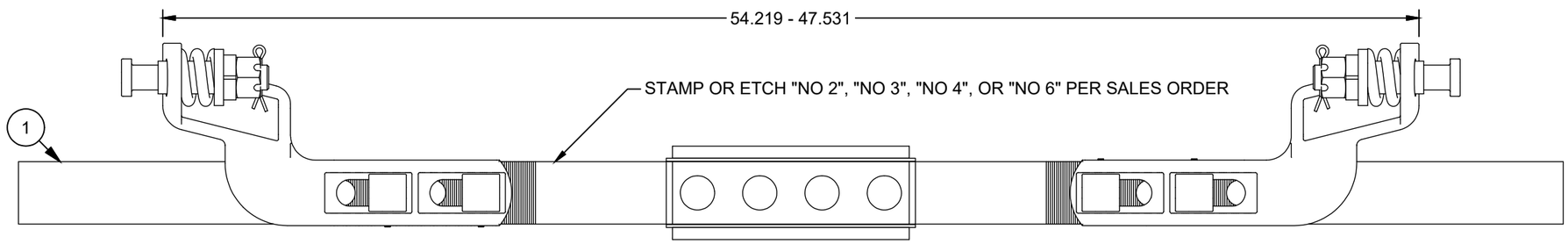

CONTINUITY TESTING:
NO LESS THAN 10 MegOhm at 500 VOLTS

1ST_____

LAST_____

VERIFY PRESENCE OF THIMBLE AS INDICATED

VERIFIED BY: _____

DATE: _____

ASSEMBLY - BILL OF MATERIAL

ITEM	QTY	PART NUMBER	DESCRIPTION
1	2	ROD1133	ROD MILLED_1.250_2.500_30.750
2	4	SPPN-INSBUSH125	SWITCH ROD_INS BUSHING_1.000_1.469
3	1	GN-INSPLATE	SWITCH ROD_INS PLATE_.125_2.500_10.000
4	1	SPPN-CRICHANNEL	SWITCH ROD_INS CHANNEL_CR 73518 G
5	1	SPPN-SPLTBNSF	SWITCH ROD_SPLICE PLATE_BNSF 241600
6	1	SPPN-SPLICEPLTE	SWITCH ROD_SPLICE PLATE_.500_2.500_9.500
7	4	TB-HUCKPIN100	BOLT HUCK_.750_2.500-2.750
8	4	TB-HUCKCOLL	NUT HUCK_.750
9	2	SPPN-RCBNSF278A	ROCKER CLIP ASSY_BNSF 241602-AREA 222 08_CLIP AB 2 7/8
10	4	LNP-AREA	WASHER LOCK_1.000_.500
11	4	TB-PCASTLE	NUT CASTLE_1.00
12	4	TB-G8THP0550	BOLT THIN_1.000_5.500

UNLESS OTHERWISE SPECIFIED DIMENSIONS ARE IN INCHES

.X	.XX	.XXX	ANGLE
± .125	± .063	± .031	± 1/4°

C:\Unitrac\Switch Rods Insulated\#2 Rod\SWR2066.idw

DRAWN	J.RHYNE	5/17/2017
CHECK	H.BLADE	5/24/2017
SHEET	1 OF 1	SIZE B

UNITRAC RAILROAD MATERIALS, INC.
PO BOX 7098
KNOXVILLE, TN 37921

TITLE
SWITCH ROD_2_INS_1.250_ROCKER_AREA 222 08_NO BASKET_CLIP AB 2 7/8

IN MAS	DRAWING NO.	REV
5/24/2017	SWR2066	

THE DOCUMENT AND THE DATA DISCLOSED HERE IN OR HERE WITH IS NOT TO BE REPRODUCED, USED, OR DISCLOSED IN WHOLE OR IN PART TO ANYONE WITHOUT THE PERMISSION OF UNITRAC RAILROAD MATERIALS INC.

SIGN OFF BLOCK

INITIALS AND DATE ALLOW PROCESS CONTINUATION

CHECK MATERIAL RECEIVED AGAINST PRINT

SAW CUT ENDS MUST BE CUT SQUARE WITHIN 1/16"

RECORD ACTUAL DIMENSIONS FOR 1ST AND LAST PART.

S.O. # _____

	INITIALS	DATE
SAW		
MILL		
STAMPING/ETCHING		
DRILLING		
WELDING		
ASSEMBLY		
PUNCHING		

COMMENTS _____

IF ANY DIMENSION DOES NOT MEET TOLERANCES ON THIS DRAWING STOP PROCESS AND NOTIFY SUPERVISOR

CONTINUITY TESTING:
NO LESS THAN 10 MegOhm at 500 VOLTS

1ST_____

LAST_____

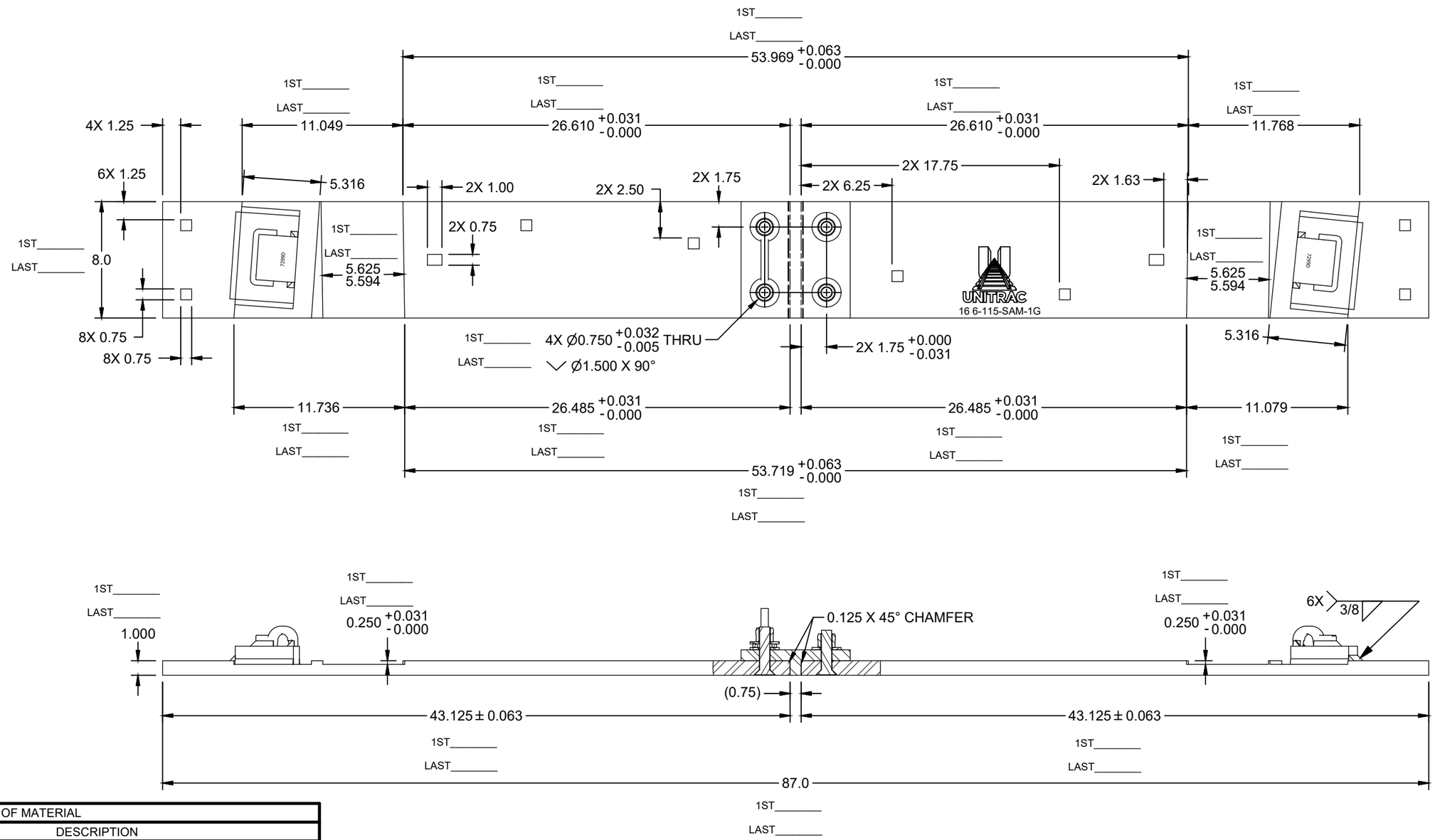

VERTEX = 0"

ASSEMBLY - BILL OF MATERIAL

ITEM	QTY	PART NUMBER	DESCRIPTION
1	2	RS100800A36	RAW STOCK_A36_1.000_8.000
2	2	PBNPDWOSBKD	BRACE BLOCK_PBN_7299_DOMESTIC_MILL-FLAT
3	2	PN-PD-ECLIPD	E-CLIP_RH_DOMESTIC
4	2	PBN115REBWD	BRACE WASHER_115-132_BOLTLESS_DOMESTIC
5	2	PBN115REBBOSURE	BRACE_115_SUREFIT
6	1	PBN-GPPLYIN1IN	GAGE PLATE_INSULATOR_1.000_8.000
7	1	PBN-LHGPCSX2340	LIFTING HOOK_CSX 2340
8	4	TB-HUCKCOLL	NUT HUCK_.750
9	2	TB-HUCKPIN-B	BOLT HUCK_.750_2.000-2.250
10	2	TB-HUCKPIN1125	BOLT HUCK_.750_1.750-2.000
11	6	LN-HUCKFLATWASH	WASHER HUCK_.750

UNLESS OTHERWISE SPECIFIED DIMENSIONS ARE IN INCHES

.X	.XX	.XXX	ANGLE
± .125	± .063	± .031	± 1/4°

DRAWN	S.KENT	2/13/2020
CHECK	C.MCBRIDE	2/13/2020
SHEET 1 OF 1	SIZE B	

C:\Unitrac\Plating-Gage\AREMA\GPA1875.idw

UNITRAC RAILROAD MATERIALS, INC.
PO BOX 7098
KNOXVILLE, TN 37921

TITLE: PLATE GAGE_115RE_01G_16 6_INS_SAM_PAN_MILL_SQ_AREA 111 03-112 03_DOMESTIC

IN MAS	DRAWING NO.	REV
2/13/2020	GPA1875	

THE DOCUMENT AND THE DATA DISCLOSED HERE IN OR HERE WITH IS NOT TO BE REPRODUCED, USED, OR DISCLOSED IN WHOLE OR IN PART TO ANYONE WITHOUT THE PERMISSION OF UNITRAC RAILROAD MATERIALS.

SIGN OFF BLOCK

INITIALS AND DATE ALLOW PROCESS CONTINUATION

CHECK MATERIAL RECEIVED AGAINST PRINT

SAW CUT ENDS MUST BE CUT SQUARE WITHIN 1/16"

RECORD ACTUAL DIMENSIONS FOR 1ST AND LAST PART.

S.O. # _____

	INITIALS	DATE
SAW		
MILL		
STAMPING/ETCHING		
DRILLING		
WELDING		
ASSEMBLY		
PUNCHING		

COMMENTS _____

IF ANY DIMENSION DOES NOT MEET TOLERANCES ON THIS DRAWING STOP PROCESS AND NOTIFY SUPERVISOR

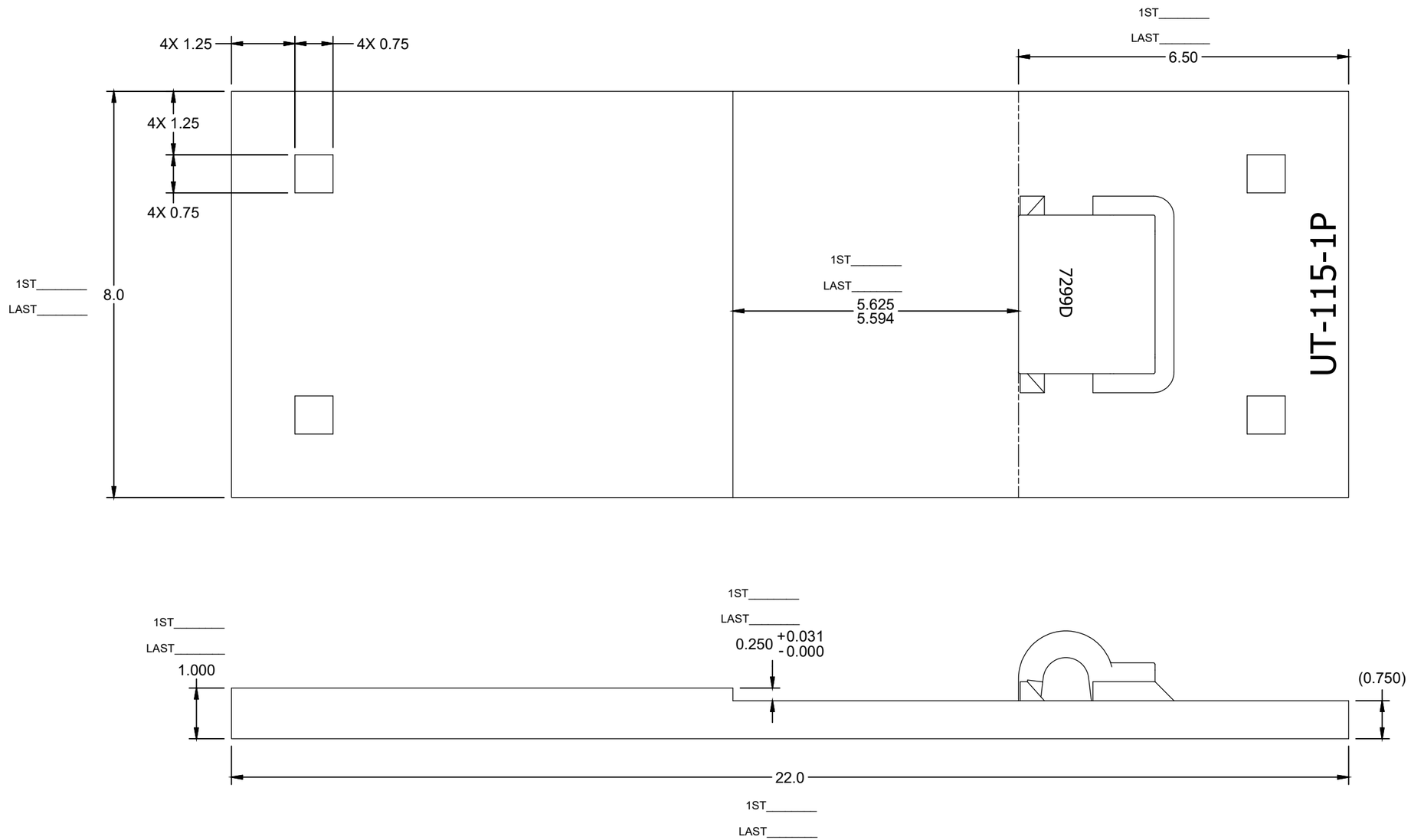

ASSEMBLY - BILL OF MATERIAL

ITEM	QTY	PART NUMBER	DESCRIPTION
1	1	RS100800A36	RAW STOCK_A36_1.000_8.000
2	1	PBN115REWS7299D	PBN_7299_DOMESTIC_FLAT
3	1	PN-PD-ECLIPD	E-CLIP_RH_DOMESTIC

UNLESS OTHERWISE SPECIFIED DIMENSIONS ARE IN INCHES

.X	.XX	.XXX	ANGLE
± .125	± .063	± .031	± 1/4°

DRAWN	S.KENT	2/13/2020
CHECK	C.MCBRIDE	2/13/2020
SHEET	1 OF 1	SIZE B

C:\Unitrac\Plating-Front Switch\AREMA\FSPA1341.idw

UNITRAC RAILROAD MATERIALS
PO BOX 7098
KNOXVILLE, TN 37921

TITLE: PLATE FS_115RE_01P_PAN_MILL_SQ_AREA 223 03_MOD-D_FLAT PANDROL_DOMESTIC

IN MAS	DRAWING NO.	REV
2/13/2020	FSPA1341	

THE DOCUMENT AND THE DATA DISCLOSED HERE IN OR HERE WITH IS NOT TO BE REPRODUCED, USED, OR DISCLOSED IN WHOLE OR IN PART TO ANYONE WITHOUT THE PERMISSION OF UNITRAC RAILROAD MATERIALS INC.

SIGN OFF BLOCK

INITIALS AND DATE ALLOW PROCESS CONTINUATION

CHECK MATERIAL RECEIVED AGAINST PRINT

SAW CUT ENDS MUST BE CUT SQUARE WITHIN 1/16"

RECORD ACTUAL DIMENSIONS FOR 1ST AND LAST PART.

S.O. # _____

	INITIALS	DATE
SAW		
MILL		
STAMPING/ETCHING		
DRILLING		
WELDING		
ASSEMBLY		
PUNCHING		

COMMENTS _____

IF ANY DIMENSION DOES NOT MEET TOLERANCES ON THIS DRAWING STOP PROCESS AND NOTIFY SUPERVISOR

REVISION HISTORY

REV	DATE	REV AUTHOR	CHECKED DATE	CHECKED BY	ECR#	CHANGE NOTE
A	1/15/2014	M.COOPER	2/24/2014	H.BLADE	673	ITEM 3 WAS PN-PD-ECLIP, NOW PN-PD-ECLIPD; UPDATED TO CURRENT STANDARDS
B	10/12/2017	S.KENT	10/18/2017	H.BLADE	1257	UPDATED POCKET PER ES-020; SEE ECR FOR DIMENSIONAL CHANGES.

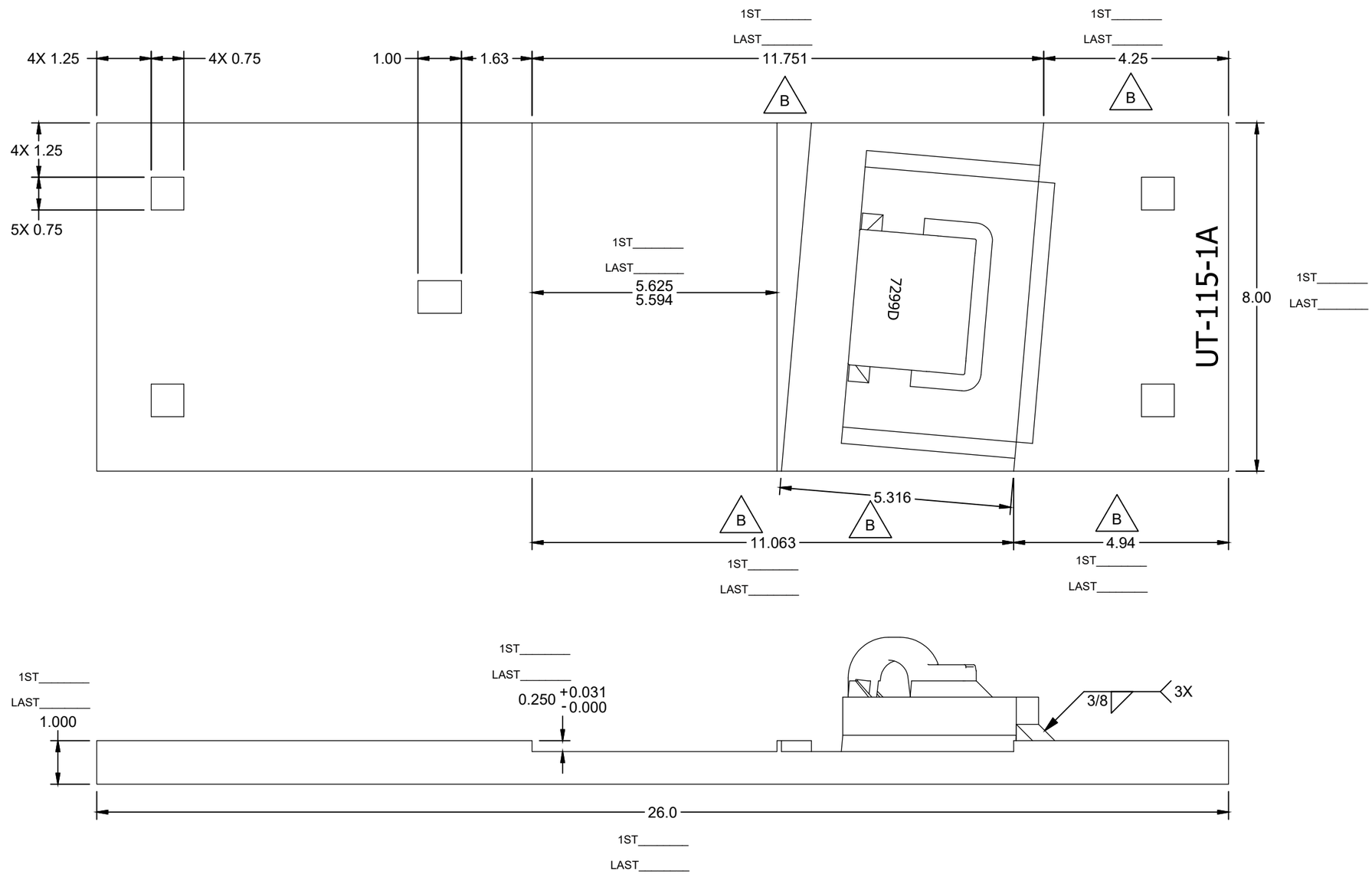

ASSEMBLY - BILL OF MATERIAL

ITEM	QTY	PART NUMBER	DESCRIPTION
1	1	RS100800A36	RAW STOCK_A36_1.000_8.000
2	1	PBNPDWOSBKD	BRACE BLOCK_PBN_7299_DOMESTIC_MILL-FLAT
3	1	PN-PD-ECLIPD	E-CLIP_RH_DOMESTIC
4	1	PBN115REBBOSURE	BRACE_115_SUREFIT
5	1	PBN115REBWD	BRACE WASHER_115-132_BOLTLESS_DOMESTIC

UNLESS OTHERWISE SPECIFIED DIMENSIONS ARE IN INCHES

.X	.XX	.XXX	ANGLE
± .125	± .063	± .031	± 1/4°

DRAWN	S.KENT	9/19/2012
CHECK	H.BLADE	9/28/2012
SHEET	1 OF 1	SIZE B

C:\Unitrac\Plating-Front Switch\AREMA\FSPA1088.idw

UNITRAC RAILROAD MATERIALS, INC.
PO BOX 7098
KNOXVILLE, TN 37921

TITLE: PLATE FS_115RE_01A_PAN_MILL_SQ_AREA 223 03_DOMESTIC

IN MAS	DRAWING NO.	REV
09/28/2012	FSPA1088	B

THE DOCUMENT AND THE DATA DISCLOSED HERE IN OR HERE WITH IS NOT TO BE REPRODUCED, USED, OR DISCLOSED IN WHOLE OR IN PART TO ANYONE WITHOUT THE PERMISSION OF UNITRAC RAILROAD MATERIALS INC.

REVISION HISTORY

REV	DATE	REV AUTHOR	CHECKED DATE	CHECKED BY	ECR#	CHANGE NOTE
A	10/10/2017	S.KENT	10/18/2017	H.BLADE	1257	UPDATED POCKET PER ES-020; ITEM #3 WAS PN-PD-ECLIP; ITEM #4 WAS PBN132REBBOD; SEE ECR FOR DIMENSIONAL CHANGES.

SIGN OFF BLOCK

INITIALS AND DATE ALLOW PROCESS CONTINUATION

CHECK MATERIAL RECEIVED AGAINST PRINT

SAW CUT ENDS MUST BE CUT SQUARE WITHIN 1/16"

RECORD ACTUAL DIMENSIONS FOR 1ST AND LAST PART.

S.O. # _____

	INITIALS	DATE
SAW		
MILL		
STAMPING/ETCHING		
DRILLING		
WELDING		
ASSEMBLY		
PUNCHING		

COMMENTS _____

IF ANY DIMENSION DOES NOT MEET TOLERANCES ON THIS DRAWING STOP PROCESS AND NOTIFY SUPERVISOR

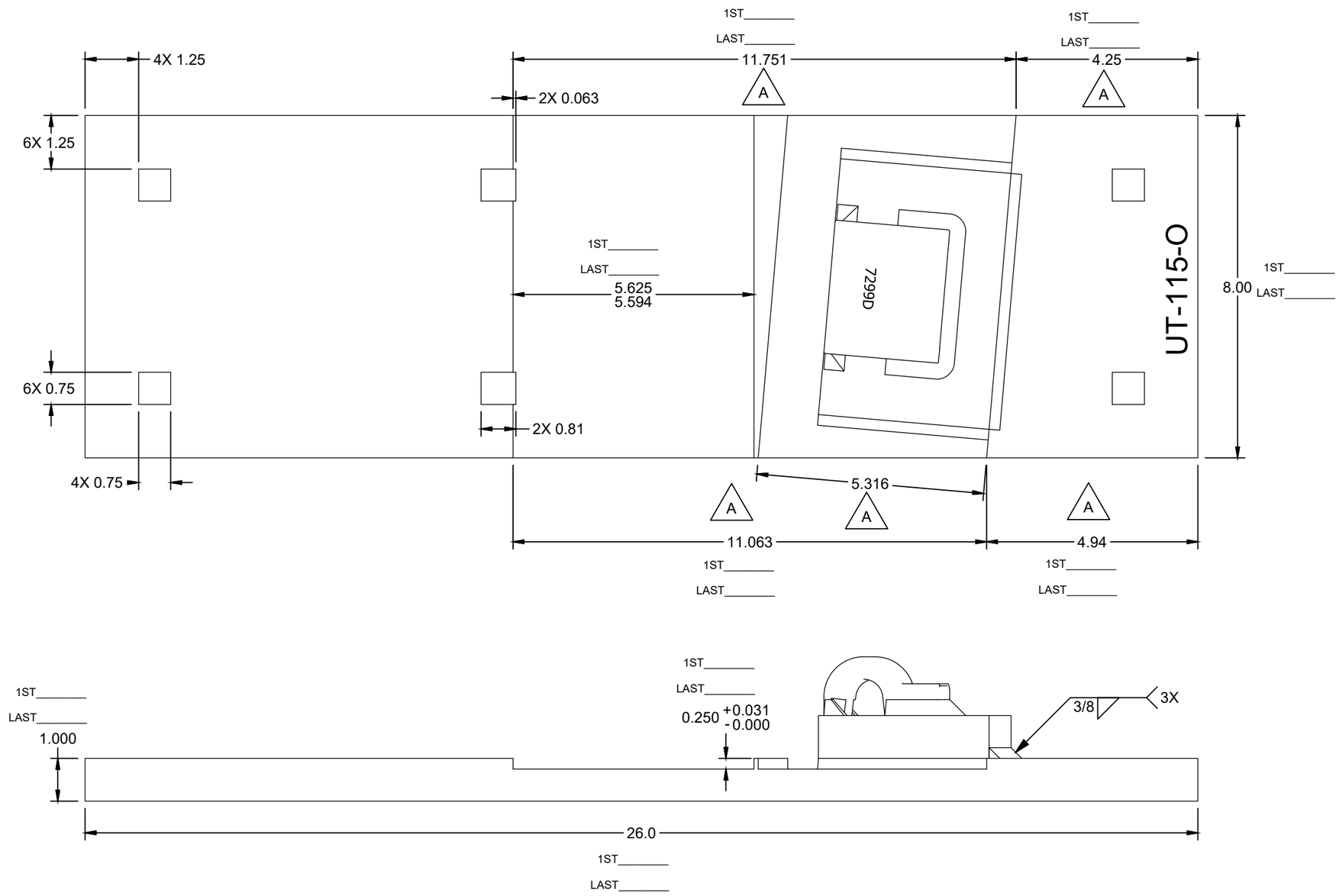

ASSEMBLY - BILL OF MATERIAL

ITEM	QTY	PART NUMBER	DESCRIPTION
1	1	RS100800A36	RAW STOCK_A36_1.000_8.000
2	1	PBNPDWOSBKD	BRACE BLOCK_PBN_7299_DOMESTIC_MILL-FLAT
3	1	PN-PD-ECLIPD	E-CLIP_RH_DOMESTIC
4	1	PBN115REBBOSURE	BRACE_115_SUREFIT
5	1	PBN115REBWD	BRACE WASHER_115-132_BOLTLESS_DOMESTIC

UNLESS OTHERWISE SPECIFIED DIMENSIONS ARE IN INCHES

.X	.XX	.XXX	ANGLE
± .125	± .063	± .031	± 1/4°

DRAWN S.KENT 11/14/2012
CHECK H.BLADE 11/21/2012
SHEET 1 OF 1
SIZE B

C:\Unitrac\Plating-Front Switch\AREMA\FSPA1125.iDW

UNITRAC RAILROAD MATERIALS, INC.
PO BOX 7098
KNOXVILLE, TN 37921

TITLE PLATE FS_115RE_O_PAN_MILL_SQ_AREA 223 03_DOMESTIC

IN MAS 11/26/2012
DRAWING NO. FSPA1125
REV A

THE DOCUMENT AND THE DATA DISCLOSED HERE IN OR HERE WITH IS NOT TO BE REPRODUCED, USED, OR DISCLOSED IN WHOLE OR IN PART TO ANYONE WITHOUT THE PERMISSION OF UNITRAC RAILROAD MATERIALS INC.

REVISION HISTORY

REV	DATE	REV AUTHOR	CHECKED DATE	CHECKED BY	ECR#	CHANGE NOTE
A	11/14/2017	S.KENT	11/14/2017	J.RHYNE	1277	UPDATED POCKET SKETCH TO CURRENT ES-020 STANDARD; SEE ECR FOR DIMENSIONAL CHANGES.

SIGN OFF BLOCK

INITIALS AND DATE ALLOW PROCESS CONTINUATION

CHECK MATERIAL RECEIVED AGAINST PRINT

SAW CUT ENDS MUST BE CUT SQUARE WITHIN 1/16"

RECORD ACTUAL DIMENSIONS FOR 1ST AND LAST PART.

S.O. # _____

	INITIALS	DATE
SAW		
MILL		
STAMPING/ETCHING		
DRILLING		
WELDING		
ASSEMBLY		
PUNCHING		

COMMENTS _____

IF ANY DIMENSION DOES NOT MEET TOLERANCES ON THIS DRAWING STOP PROCESS AND NOTIFY SUPERVISOR

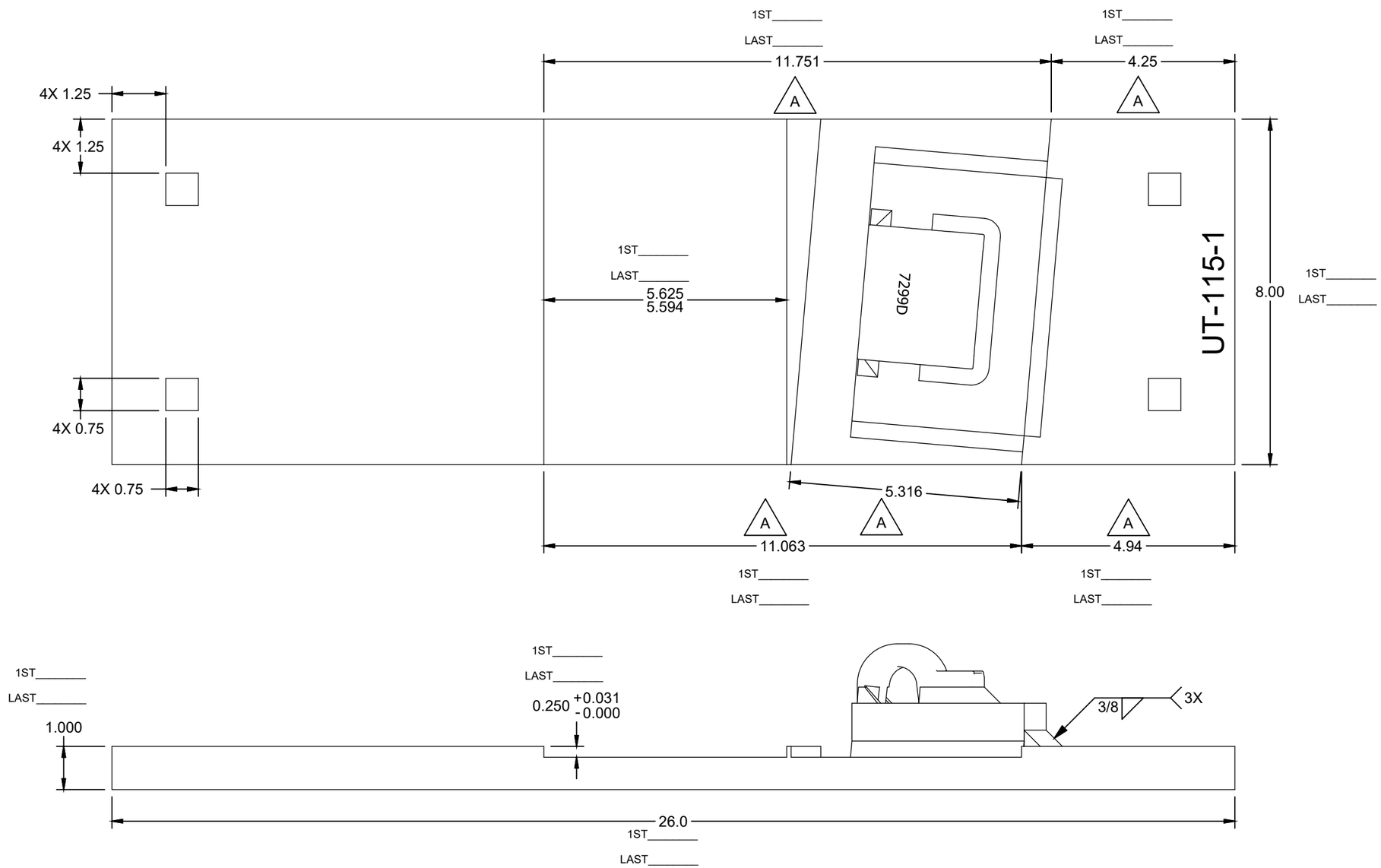

ASSEMBLY - BILL OF MATERIAL

ITEM	QTY	PART NUMBER	DESCRIPTION
1	1	RS100800A36	RAW STOCK_A36_1.000_8.000
2	1	PBNPDWOSBKD	BRACE BLOCK_PBN_7299_DOMESTIC_MILL-FLAT
3	1	PN-PD-ECLIPD	E-CLIP_RH_DOMESTIC
4	1	PBN115REBBOSURE	BRACE_115_SUREFIT
5	1	PBN115REBWD	BRACE WASHER_115-132_BOLTLESS_DOMESTIC

UNLESS OTHERWISE SPECIFIED DIMENSIONS ARE IN INCHES

.X	.XX	.XXX	ANGLE
± .125	± .063	± .031	± 1/4°

DRAWN	M.COOPER	1/13/2014
CHECK	H.BLADE	2/24/2014
SHEET	1 OF 1	SIZE B

C:\Unitrac\Plating-Front Switch\AREMA\FSPA1210.idw

UNITRAC RAILROAD MATERIALS, INC.
PO BOX 7098
KNOXVILLE, TN 37921

TITLE
PLATE FS_115RE_01_PAN_MILL_SQ_AREA 223 03_DOMESTIC

IN MAS	DRAWING NO.	REV
2/24/2014	FSPA1210	A

THE DOCUMENT AND THE DATA DISCLOSED HERE IN OR HERE WITH IS NOT TO BE REPRODUCED, USED, OR DISCLOSED IN WHOLE OR IN PART TO ANYONE WITHOUT THE PERMISSION OF UNITRAC RAILROAD MATERIALS.

SIGN OFF BLOCK

INITIALS AND DATE ALLOW PROCESS CONTINUATION

CHECK MATERIAL RECEIVED AGAINST PRINT

SAW CUT ENDS MUST BE CUT SQUARE WITHIN 1/16"

RECORD ACTUAL DIMENSIONS FOR 1ST AND LAST PART.

S.O. # _____

	INITIALS	DATE
SAW		
MILL		
STAMPING/ETCHING		
DRILLING		
WELDING		
ASSEMBLY		
PUNCHING		

COMMENTS _____

IF ANY DIMENSION DOES NOT MEET TOLERANCES ON THIS DRAWING STOP PROCESS AND NOTIFY SUPERVISOR

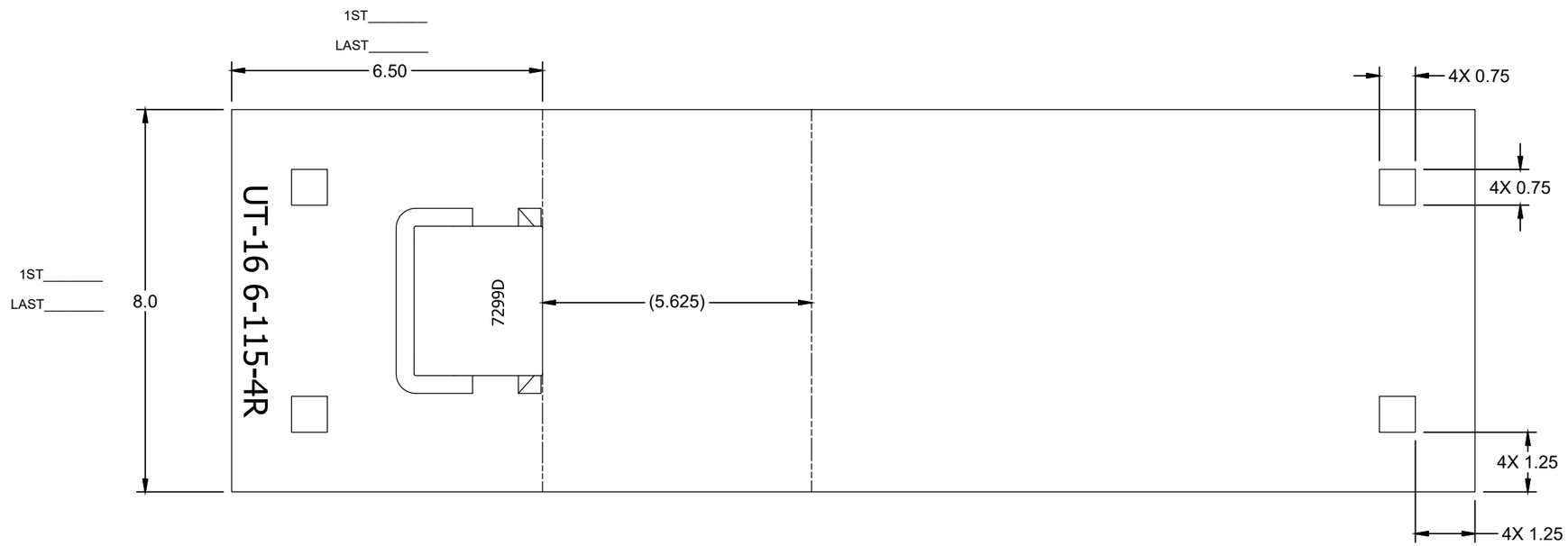

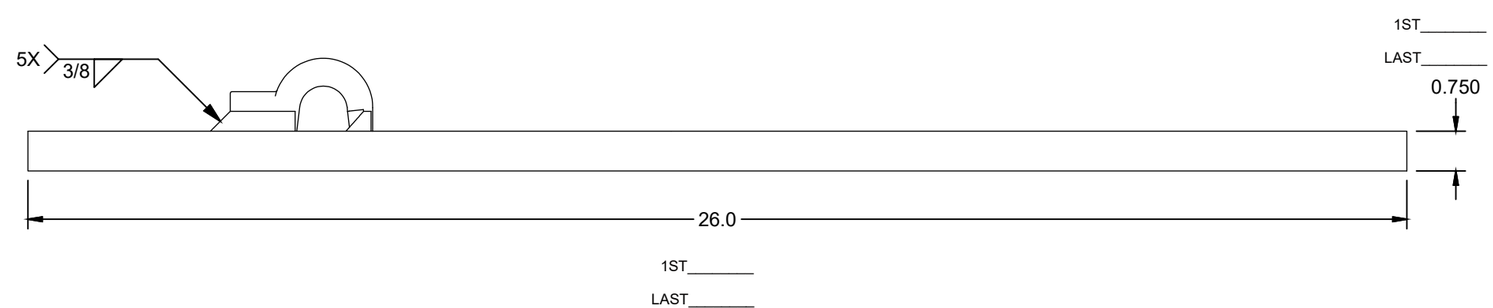

ASSEMBLY - BILL OF MATERIAL

ITEM	QTY	PART NUMBER	DESCRIPTION
1	1	RS075800A36	RAW STOCK_A36_0.750_8.000
2	1	PBN115REWS7299D	PBN_7299_DOMESTIC_FLAT
3	1	PN-PD-ECLIPD	E-CLIP_RH_DOMESTIC

UNLESS OTHERWISE SPECIFIED DIMENSIONS ARE IN INCHES

.X	.XX	.XXX	ANGLE
± .125	± .063	± .031	± 1/4°

DRAWN	C.TAYLOR	9/12/2019
CHECK	S.KENT	9/12/2019
SHEET 1 OF 1	SIZE B	

C:\Unitrac\Plating-Front Switch\AREMA\FSPA1330.idw

UNITRAC RAILROAD MATERIALS

PO BOX 7098
KNOXVILLE, TN 37921

TITLE
PLATE FS_115RE_04R_PAN_FLAT_SQ_AREA 112 03_MOD-D_DOMESTIC

IN MAS	DRAWING NO.	REV
9/12/2019	FSPA1330	

THE DOCUMENT AND THE DATA DISCLOSED HERE IN OR HERE WITH IS NOT TO BE REPRODUCED, USED, OR DISCLOSED IN WHOLE OR IN PART TO ANYONE WITHOUT THE PERMISSION OF UNITRAC RAILROAD MATERIALS.

SIGN OFF BLOCK

INITIALS AND DATE ALLOW PROCESS CONTINUATION

CHECK MATERIAL RECEIVED AGAINST PRINT

SAW CUT ENDS MUST BE CUT SQUARE WITHIN 1/16"

RECORD ACTUAL DIMENSIONS FOR 1ST AND LAST PART.

S.O. # _____

	INITIALS	DATE
SAW		
MILL		
STAMPING/ETCHING		
DRILLING		
WELDING		
ASSEMBLY		
PUNCHING		

COMMENTS _____

IF ANY DIMENSION DOES NOT MEET TOLERANCES ON THIS DRAWING STOP PROCESS AND NOTIFY SUPERVISOR

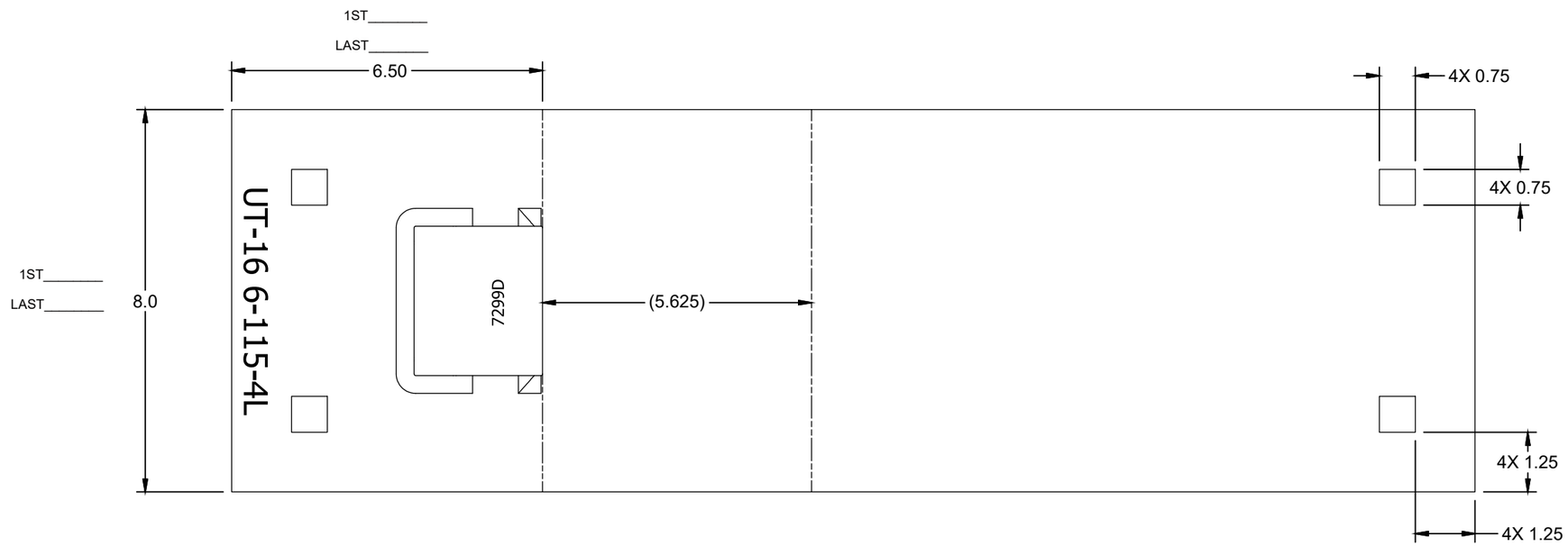

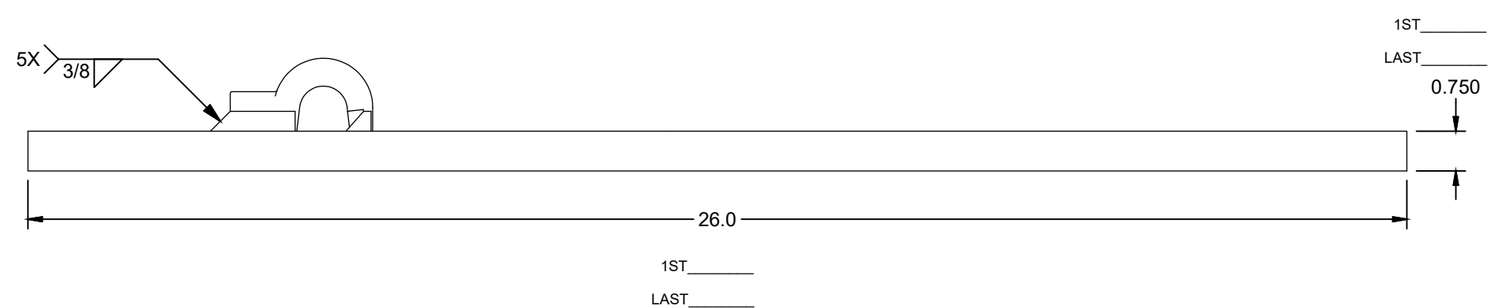

ASSEMBLY - BILL OF MATERIAL

ITEM	QTY	PART NUMBER	DESCRIPTION
1	1	RS075800A36	RAW STOCK_A36_0.750_8.000
2	1	PBN115REWS7299D	PBN_7299_DOMESTIC_FLAT
3	1	PN-PD-ECLIPD	E-CLIP_RH_DOMESTIC

UNLESS OTHERWISE SPECIFIED DIMENSIONS ARE IN INCHES

.X	.XX	.XXX	ANGLE
± .125	± .063	± .031	± 1/4°

DRAWN	C.TAYLOR	9/12/2019
CHECK	S.KENT	9/12/2019
SHEET 1 OF 1	SIZE B	

C:\Unitrac\Plating-Front Switch\AREMA\FSPA1331.idw

UNITRAC RAILROAD MATERIALS
PO BOX 7098
KNOXVILLE, TN 37921

TITLE
PLATE FS_115RE_04L_PAN_FLAT_SQ_AREA 112 03_MOD-D_DOMESTIC

IN MAS	DRAWING NO.	REV
9/12/2019	FSPA1331	

THE DOCUMENT AND THE DATA DISCLOSED HERE IN OR HERE WITH IS NOT TO BE REPRODUCED, USED, OR DISCLOSED IN WHOLE OR IN PART TO ANYONE WITHOUT THE PERMISSION OF UNITRAC RAILROAD MATERIALS.

SIGN OFF BLOCK

INITIALS AND DATE ALLOW PROCESS CONTINUATION

CHECK MATERIAL RECEIVED AGAINST PRINT

SAW CUT ENDS MUST BE CUT SQUARE WITHIN 1/16"

RECORD ACTUAL DIMENSIONS FOR 1ST AND LAST PART.

S.O. # _____

	INITIALS	DATE
SAW		
MILL		
STAMPING/ETCHING		
DRILLING		
WELDING		
ASSEMBLY		
PUNCHING		

COMMENTS _____

IF ANY DIMENSION DOES NOT MEET TOLERANCES ON THIS DRAWING STOP PROCESS AND NOTIFY SUPERVISOR

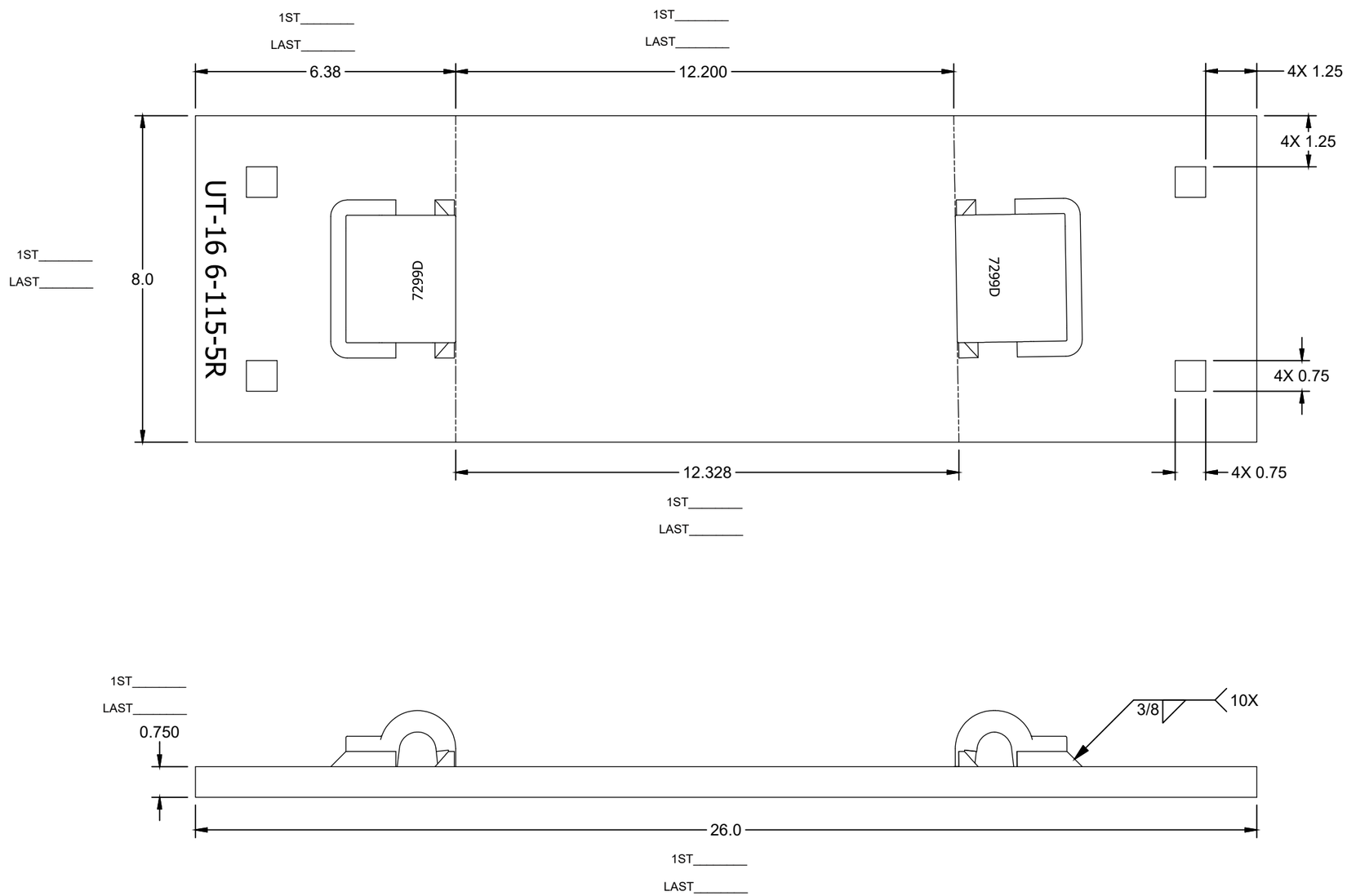

UNLESS OTHERWISE SPECIFIED DIMENSIONS ARE IN INCHES				DRAWN C.TAYLOR	9/12/2019
				CHECK S.KENT	9/12/2019
.X ± .125	.XX ± .063	.XXX ± .031	ANGLE ± 1/4°	SHEET 1 OF 1	SIZE B

C:\Unitrac\Plating-Front Switch\AREMA\FSPA1332.idw

UNITRAC RAILROAD MATERIALS
PO BOX 7098
KNOXVILLE, TN 37921

TITLE
PLATE FS_115RE_05R_PAN_FLAT_SQ_AREA 112 03_MOD-D_DOMESTIC

IN MAS	DRAWING NO.	REV
9/12/2019	FSPA1332	

THE DOCUMENT AND THE DATA DISCLOSED HERE IN OR HERE WITH IS NOT TO BE REPRODUCED, USED, OR DISCLOSED IN WHOLE OR IN PART TO ANYONE WITHOUT THE PERMISSION OF UNITRAC RAILROAD MATERIALS.

SIGN OFF BLOCK

INITIALS AND DATE ALLOW PROCESS CONTINUATION

CHECK MATERIAL RECEIVED AGAINST PRINT

SAW CUT ENDS MUST BE CUT SQUARE WITHIN 1/16"

RECORD ACTUAL DIMENSIONS FOR 1ST AND LAST PART.

S.O. # _____

	INITIALS	DATE
SAW		
MILL		
STAMPING/ETCHING		
DRILLING		
WELDING		
ASSEMBLY		
PUNCHING		

COMMENTS _____

IF ANY DIMENSION DOES NOT MEET TOLERANCES ON THIS DRAWING STOP PROCESS AND NOTIFY SUPERVISOR

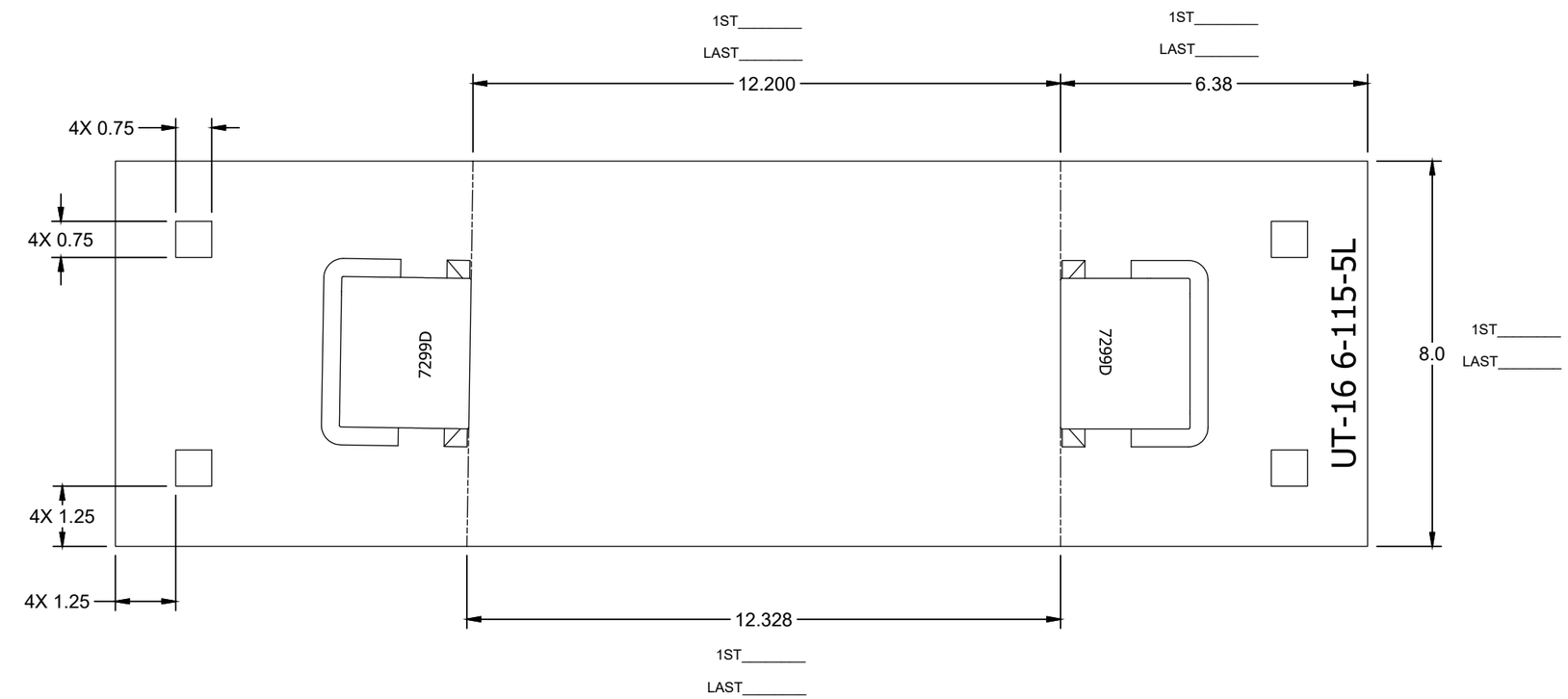

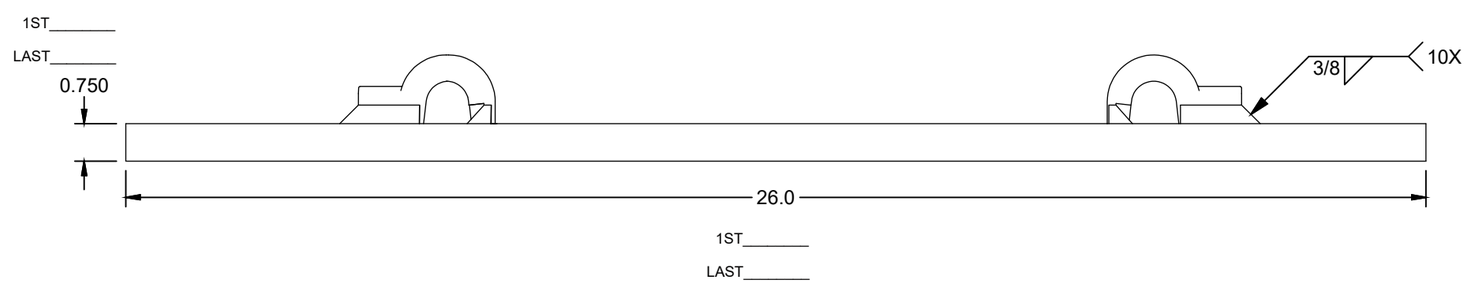

ASSEMBLY - BILL OF MATERIAL

ITEM	QTY	PART NUMBER	DESCRIPTION
1	1	RS075800A36	RAW STOCK_A36_0.750_8.000
2	2	PBN115REWS7299D	PBN_7299_DOMESTIC_FLAT
3	2	PN-PD-ECLIPD	E-CLIP_RH_DOMESTIC

UNLESS OTHERWISE SPECIFIED DIMENSIONS ARE IN INCHES

.X	.XX	.XXX	ANGLE
± .125	± .063	± .031	± 1/4°

DRAWN	C.TAYLOR	9/12/2019
CHECK	S.KENT	9/12/2019
SHEET 1 OF 1	SIZE B	

C:\Unitrac\Plating-Front Switch\AREMA\FSPA1333.idw

UNITRAC RAILROAD MATERIALS
PO BOX 7098
KNOXVILLE, TN 37921

TITLE
PLATE FS_115RE_05L_PAN_FLAT_SQ_AREA 112 03_MOD-D_DOMESTIC

IN MAS	DRAWING NO.	REV
9/12/2019	FSPA1333	

THE DOCUMENT AND THE DATA DISCLOSED HERE IN OR HERE WITH IS NOT TO BE REPRODUCED, USED, OR DISCLOSED IN WHOLE OR IN PART TO ANYONE WITHOUT THE PERMISSION OF UNITRAC RAILROAD MATERIALS INC.

REVISION HISTORY

REV	DATE	REV AUTHOR	CHECKED DATE	CHECKED BY	ECR#	CHANGE NOTE
A	2/22/2017	J.RHYNE	2/24/2017	S.KENT	1168	UPDATED TO CURRENT STANDARDS; ETCHING WAS 115RE - 2; LOWER TOLERANCE DIMENSION 5.594 WAS 5.593; ITEM #3 WAS PN-PD-ECLIP
B	10/12/2017	S.KENT	10/18/2017	H.BLADE	1257	UPDATED POCKET PER ES-020; SEE ECR FOR DIMENSIONAL CHANGES.

SIGN OFF BLOCK

INITIALS AND DATE ALLOW PROCESS CONTINUATION

CHECK MATERIAL RECEIVED AGAINST PRINT

SAW CUT ENDS MUST BE CUT SQUARE WITHIN 1/16"

RECORD ACTUAL DIMENSIONS FOR 1ST AND LAST PART.

S.O. # _____

	INITIALS	DATE
SAW		
MILL		
STAMPING/ETCHING		
DRILLING		
WELDING		
ASSEMBLY		
PUNCHING		

COMMENTS _____

IF ANY DIMENSION DOES NOT MEET TOLERANCES ON THIS DRAWING STOP PROCESS AND NOTIFY SUPERVISOR

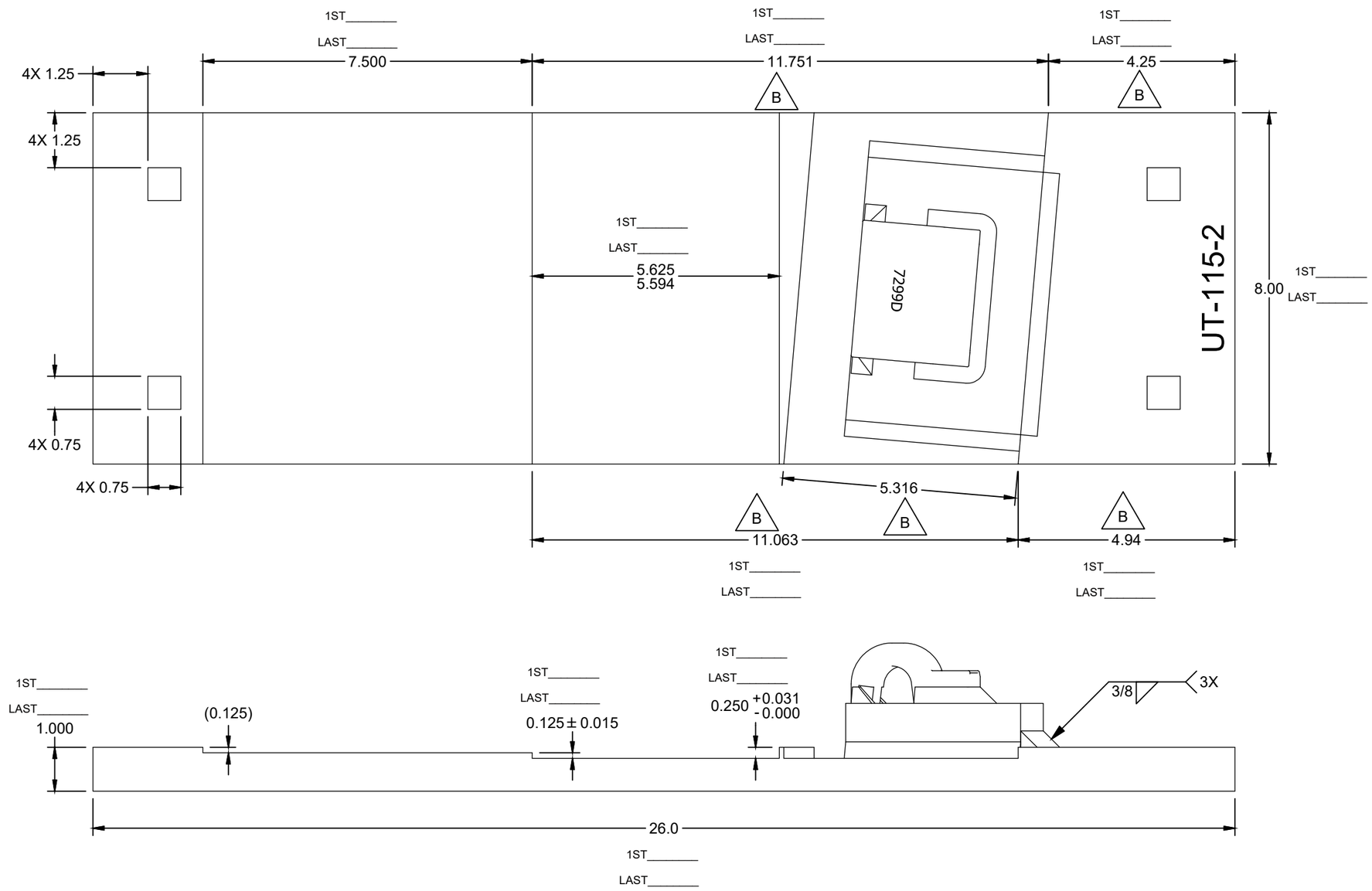

ASSEMBLY - BILL OF MATERIAL

ITEM	QTY	PART NUMBER	DESCRIPTION
1	1	RS100800A36	RAW STOCK_A36_1.000_8.000
2	1	PBNPDWOSBKD	BRACE BLOCK_PBN_7299_DOMESTIC_MILL-FLAT
3	1	PN-PD-ECLIPD	E-CLIP_RH_DOMESTIC
4	1	PBN115REBWD	BRACE WASHER_115-132_BOLTLESS_DOMESTIC
5	1	PBN115REBBOSURE	BRACE_115_SUREFIT

UNLESS OTHERWISE SPECIFIED DIMENSIONS ARE IN INCHES

.X	.XX	.XXX	ANGLE
± .125	± .063	± .031	± 1/4°

DRAWN	C.CARDWELL	3/7/2011
CHECK	R.MATLOCK	3/21/2011
SHEET 1 OF 1	SIZE B	

C:\Unitrac\Plating-Front Switch\AREMA\ZSP115AREA10-02.idw

UNITRAC RAILROAD MATERIALS, INC.
PO BOX 7098
KNOXVILLE, TN 37921

TITLE
PLATE FS_115RE_02_PAN_MILL_SQ_AREA 112 03_DOMESTIC

IN MAS	DRAWING NO.	REV
2/24/2017	ZSP115AREA10-02	B

THE DOCUMENT AND THE DATA DISCLOSED HERE IN OR HERE WITH IS NOT TO BE REPRODUCED, USED, OR DISCLOSED IN WHOLE OR IN PART TO ANYONE WITHOUT THE PERMISSION OF UNITRAC RAILROAD MATERIALS INC.

REVISION HISTORY

REV	DATE	REV AUTHOR	CHECKED DATE	CHECKED BY	ECR#	CHANGE NOTE
A	2/23/2017	J.RHYNE	2/24/2017	S.KENT	1168	UPDATED TO CURRENT STANDARDS; ITEM #3 WAS PN-PD-ECLIP; ETCHING WAS 115RE - 3M

SIGN OFF BLOCK

INITIALS AND DATE ALLOW PROCESS CONTINUATION

CHECK MATERIAL RECEIVED AGAINST PRINT

SAW CUT ENDS MUST BE CUT SQUARE WITHIN 1/16"

RECORD ACTUAL DIMENSIONS FOR 1ST AND LAST PART.

S.O. # _____

	INITIALS	DATE
SAW		
MILL		
STAMPING/ETCHING		
DRILLING		
WELDING		
ASSEMBLY		
PUNCHING		

COMMENTS _____

IF ANY DIMENSION DOES NOT MEET TOLERANCES ON THIS DRAWING STOP PROCESS AND NOTIFY SUPERVISOR

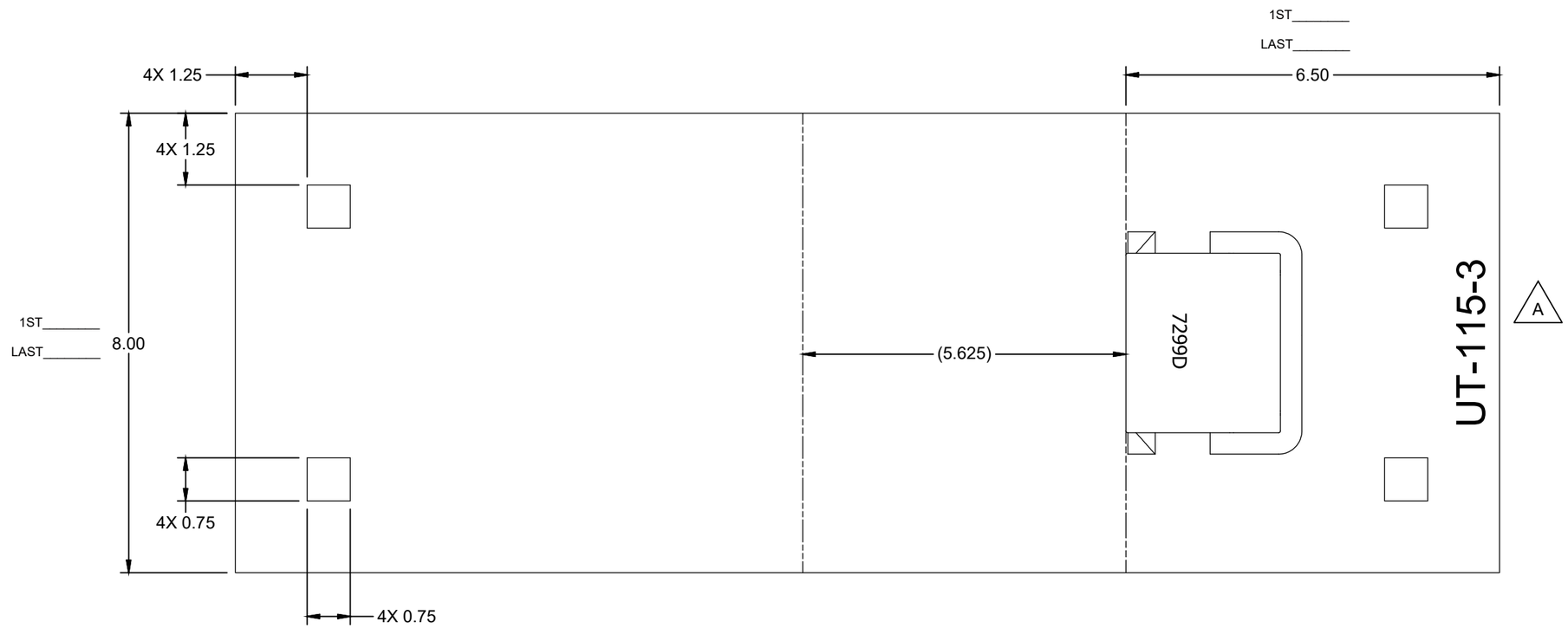

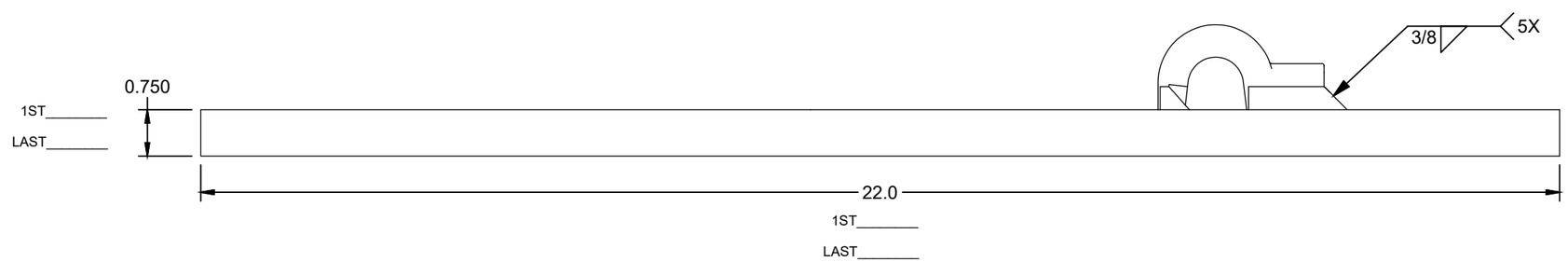

ASSEMBLY - BILL OF MATERIAL

ITEM	QTY	PART NUMBER	DESCRIPTION
1	1	RS075800A36	RAW STOCK_A36_.750_8.000
2	1	PBN115REWS7299D	PBN_7299_DOMESTIC_FLAT
3	1	PN-PD-ECLIPD	E-CLIP_RH_DOMESTIC

UNLESS OTHERWISE SPECIFIED DIMENSIONS ARE IN INCHES

.X	.XX	.XXX	ANGLE
± .125	± .063	± .031	± 1/4°

DRAWN	C.CARDWELL	3/7/2011
CHECK	R.MATLOCK	3/21/2011
SHEET 1 OF 1	SIZE B	

C:\Unitrac\Plating-Front Switch\AREMA\ZSP115AREA10-3M.idw

UNITRAC RAILROAD MATERIALS, INC.
PO BOX 7098
KNOXVILLE, TN 37921

TITLE: PLATE FS_115RE_03_PAN_FLAT_SQ_AREA 112 03_DOMESTIC

IN MAS	DRAWING NO.	REV
2/24/2017	ZSP115AREA10-3M	A

THE DOCUMENT AND THE DATA DISCLOSED HERE IN OR HERE WITH IS NOT TO BE REPRODUCED, USED, OR DISCLOSED IN WHOLE OR IN PART TO ANYONE WITHOUT THE PERMISSION OF UNITRAC RAILROAD MATERIALS INC.

SIGN OFF BLOCK

INITIALS AND DATE ALLOW PROCESS CONTINUATION

CHECK MATERIAL RECEIVED AGAINST PRINT

SAW CUT ENDS MUST BE CUT SQUARE WITHIN 1/16"

RECORD ACTUAL DIMENSIONS FOR 1ST AND LAST PART.

S.O. # _____

	INITIALS	DATE
SAW		
MILL		
STAMPING/ETCHING		
DRILLING		
WELDING		
ASSEMBLY		
PUNCHING		

COMMENTS _____

IF ANY DIMENSION DOES NOT MEET TOLERANCES ON THIS DRAWING STOP PROCESS AND NOTIFY SUPERVISOR

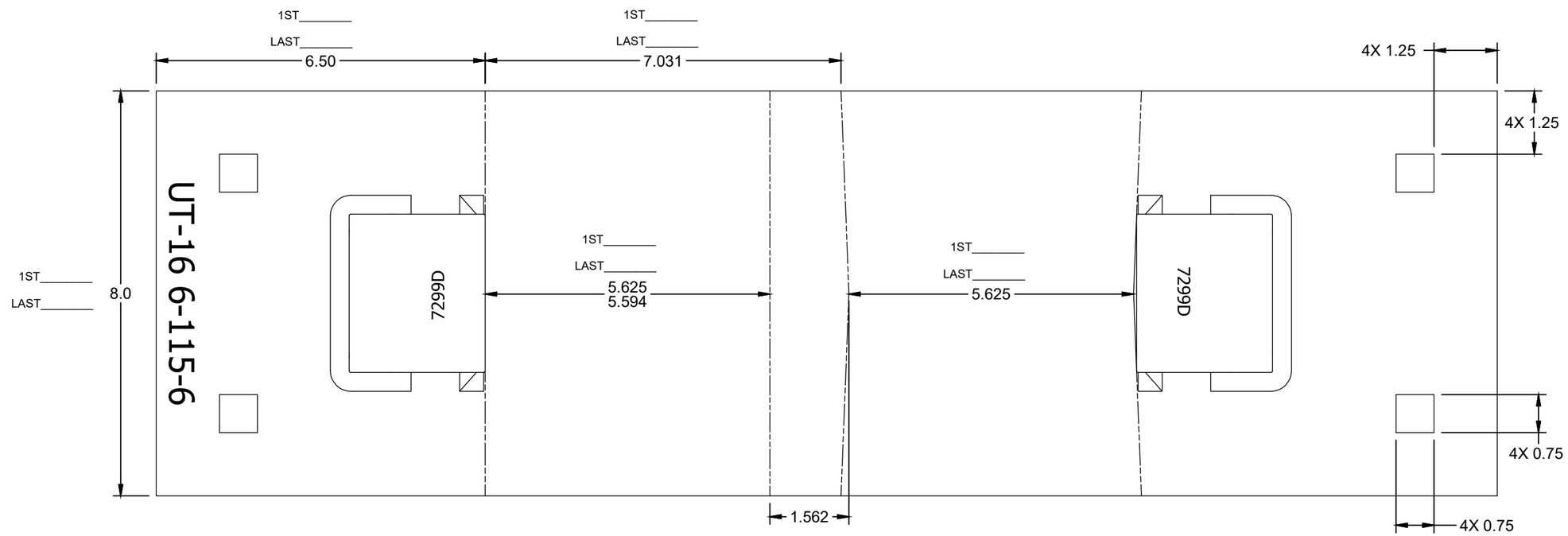

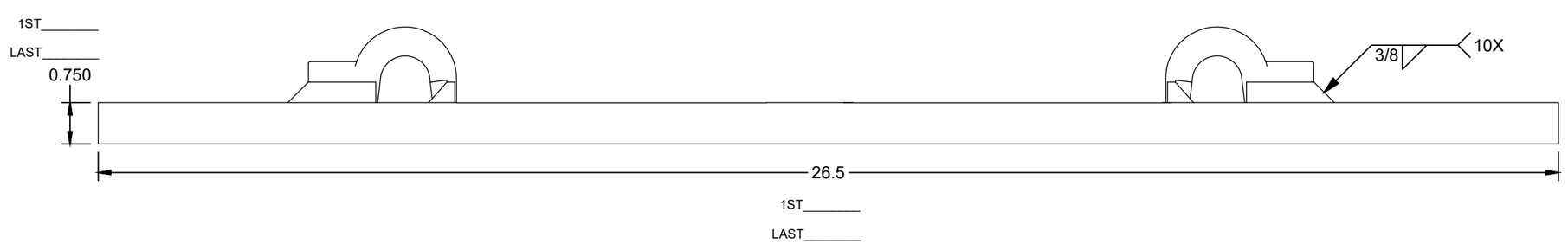

ASSEMBLY - BILL OF MATERIAL

ITEM	QTY	PART NUMBER	DESCRIPTION
1	1	RS075800A36	RAW STOCK_A36_0.750_8.000
2	2	PBN115REWS7299D	PBN_7299_DOMESTIC_FLAT
3	2	PN-PD-ECLIPD	E-CLIP_RH_DOMESTIC

UNLESS OTHERWISE SPECIFIED DIMENSIONS ARE IN INCHES

.X	.XX	.XXX	ANGLE
± .125	± .063	± .031	± 1/4°

DRAWN	S.KENT	2/17/2020
CHECK	C.TAYLOR	2/18/2020
SHEET 1 OF 1	SIZE B	

C:\Unitrac\Plating-Turnout\AREMA\ZTPA3152.idw

UNITRAC RAILROAD MATERIALS, INC.
PO BOX 7098
KNOXVILLE, TN 37921

TITLE
PLATE TO_115RE_8-10_06_PAN_FLAT_SQ_AREA 112 03_MOD-D_DOMESTIC

IN MAS	DRAWING NO.	REV
2/18/2020	ZTPA3152	

THE DOCUMENT AND THE DATA DISCLOSED HERE IN OR HERE WITH IS NOT TO BE REPRODUCED, USED, OR DISCLOSED IN WHOLE OR IN PART TO ANYONE WITHOUT THE PERMISSION OF UNITRAC RAILROAD MATERIALS INC.

SIGN OFF BLOCK

INITIALS AND DATE ALLOW PROCESS CONTINUATION

CHECK MATERIAL RECEIVED AGAINST PRINT

SAW CUT ENDS MUST BE CUT SQUARE WITHIN 1/16"

RECORD ACTUAL DIMENSIONS FOR 1ST AND LAST PART.

S.O. # _____

	INITIALS	DATE
SAW		
MILL		
STAMPING/ETCHING		
DRILLING		
WELDING		
ASSEMBLY		
PUNCHING		

COMMENTS _____

IF ANY DIMENSION DOES NOT MEET TOLERANCES ON THIS DRAWING STOP PROCESS AND NOTIFY SUPERVISOR

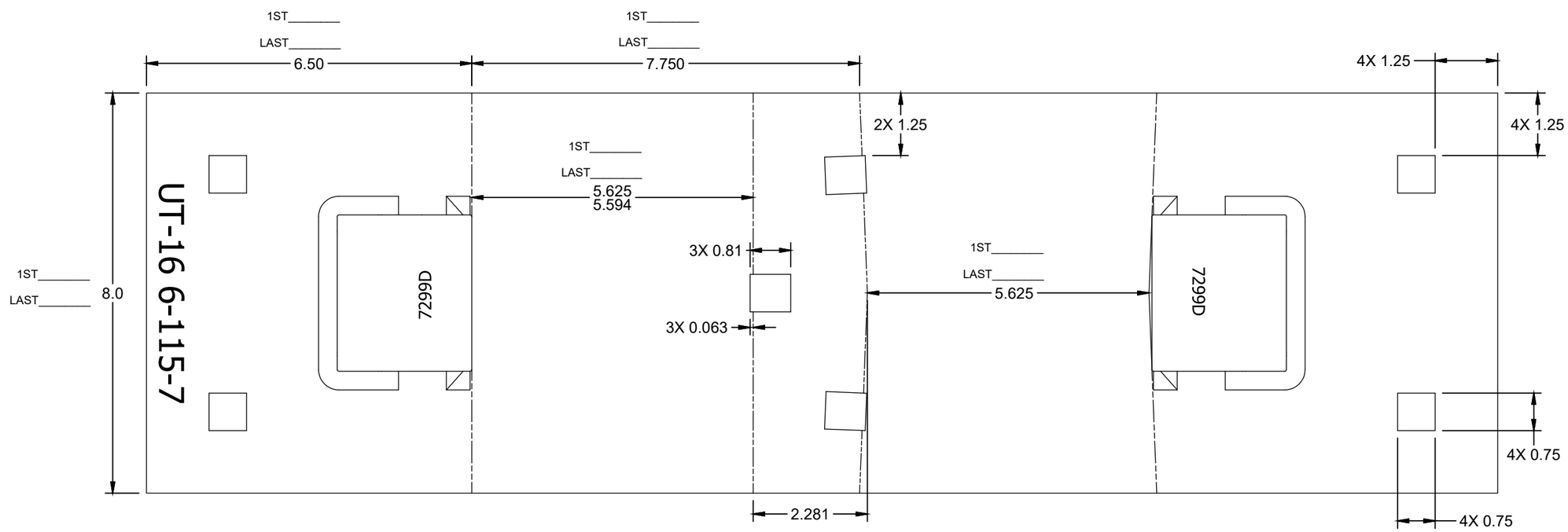

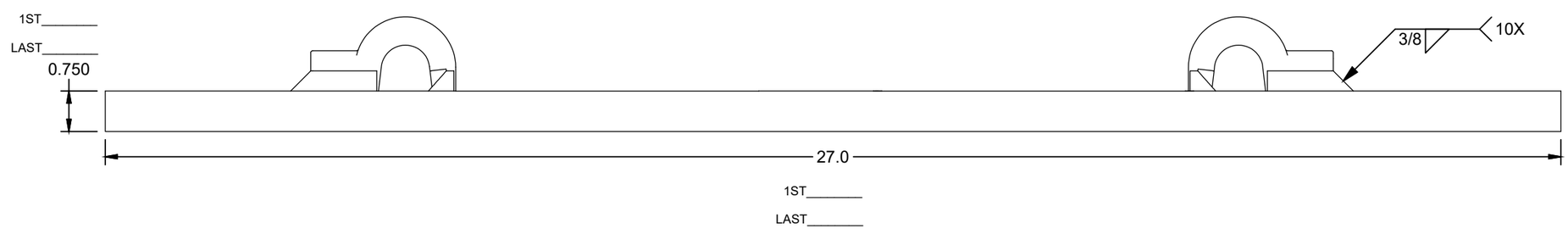

ASSEMBLY - BILL OF MATERIAL

ITEM	QTY	PART NUMBER	DESCRIPTION
1	1	RS075800A36	RAW STOCK_A36_0.750_8.000
2	2	PBN115REWS7299D	PBN_7299_DOMESTIC_FLAT
3	2	PN-PD-ECLIPD	E-CLIP_RH_DOMESTIC

UNLESS OTHERWISE SPECIFIED DIMENSIONS ARE IN INCHES

.X	.XX	.XXX	ANGLE
± .125	± .063	± .031	± 1/4°

DRAWN	S.KENT	2/17/2020
CHECK	C.TAYLOR	2/18/2020
SHEET 1 OF 1	SIZE B	

C:\Unitrac\Plating-Turnout\AREMA\ZTPA3153.idw

UNITRAC RAILROAD MATERIALS, INC.

PO BOX 7098
KNOXVILLE, TN 37921

TITLE
PLATE TO_115RE_8-10_07_PAN_FLAT_SQ_AREA 112 03_MOD-D_DOMESTIC

IN MAS	DRAWING NO.	REV
2/18/2020	ZTPA3153	

THE DOCUMENT AND THE DATA DISCLOSED HERE IN OR HERE WITH IS NOT TO BE REPRODUCED, USED, OR DISCLOSED IN WHOLE OR IN PART TO ANYONE WITHOUT THE PERMISSION OF UNITRAC RAILROAD MATERIALS INC.

SIGN OFF BLOCK

INITIALS AND DATE ALLOW PROCESS CONTINUATION

CHECK MATERIAL RECEIVED AGAINST PRINT

SAW CUT ENDS MUST BE CUT SQUARE WITHIN 1/16"

RECORD ACTUAL DIMENSIONS FOR 1ST AND LAST PART.

S.O. # _____

	INITIALS	DATE
SAW		
MILL		
STAMPING/ETCHING		
DRILLING		
WELDING		
ASSEMBLY		
PUNCHING		

COMMENTS _____

IF ANY DIMENSION DOES NOT MEET TOLERANCES ON THIS DRAWING STOP PROCESS AND NOTIFY SUPERVISOR

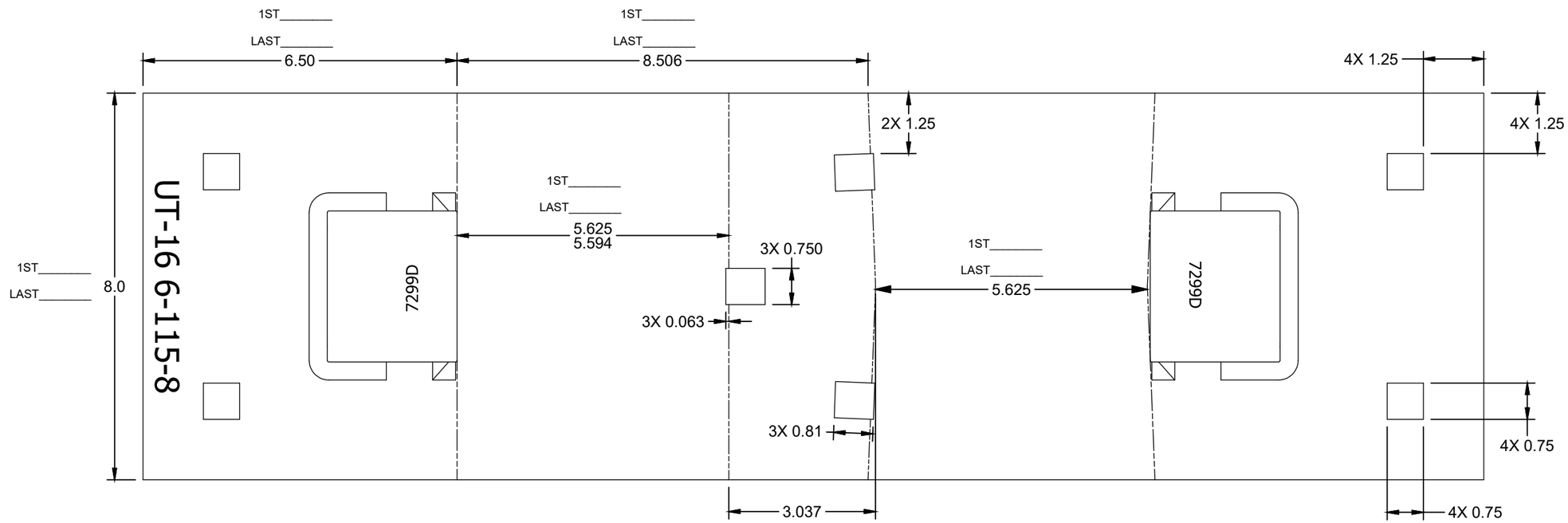

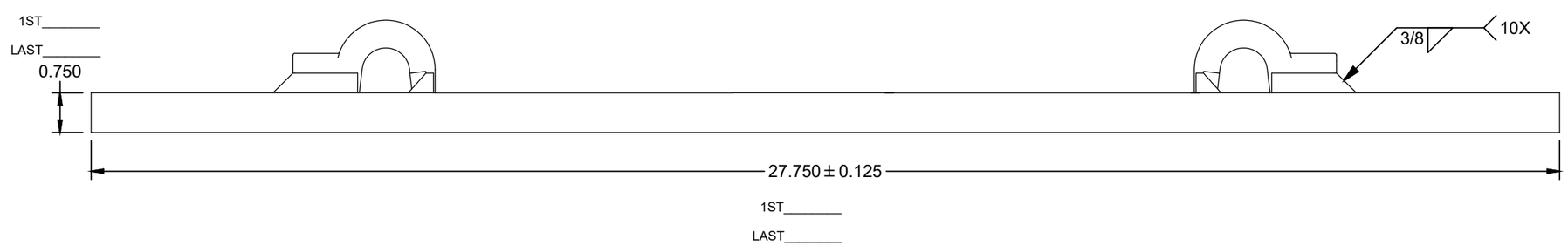

ASSEMBLY - BILL OF MATERIAL

ITEM	QTY	PART NUMBER	DESCRIPTION
1	1	RS075800A36	RAW STOCK_A36_0.750_8.000
2	2	PBN115REWS7299D	PBN_7299_DOMESTIC_FLAT
3	2	PN-PD-ECLIPD	E-CLIP_RH_DOMESTIC

UNLESS OTHERWISE SPECIFIED DIMENSIONS ARE IN INCHES

.X	.XX	.XXX	ANGLE
± .125	± .063	± .031	± 1/4°

DRAWN	S.KENT	2/17/2020
CHECK	C.TAYLOR	2/18/2020
SHEET 1 OF 1	SIZE B	

C:\Unitrac\Plating-Turnout\AREMA\ZTPA3154.idw

UNITRAC RAILROAD MATERIALS, INC.

PO BOX 7098
KNOXVILLE, TN 37921

TITLE
PLATE TO_115RE_8-10_08_PAN_FLAT_SQ_AREA 112 03_MOD-D_DOMESTIC

IN MAS	DRAWING NO.	REV
2/18/2020	ZTPA3154	

THE DOCUMENT AND THE DATA DISCLOSED HERE IN OR HERE WITH IS NOT TO BE REPRODUCED, USED, OR DISCLOSED IN WHOLE OR IN PART TO ANYONE WITHOUT THE PERMISSION OF UNITRAC RAILROAD MATERIALS INC.

SIGN OFF BLOCK

INITIALS AND DATE ALLOW PROCESS CONTINUATION

CHECK MATERIAL RECEIVED AGAINST PRINT

SAW CUT ENDS MUST BE CUT SQUARE WITHIN 1/16"

RECORD ACTUAL DIMENSIONS FOR 1ST AND LAST PART.

S.O. # _____

	INITIALS	DATE
SAW		
MILL		
STAMPING/ETCHING		
DRILLING		
WELDING		
ASSEMBLY		
PUNCHING		

COMMENTS _____

IF ANY DIMENSION DOES NOT MEET TOLERANCES ON THIS DRAWING STOP PROCESS AND NOTIFY SUPERVISOR

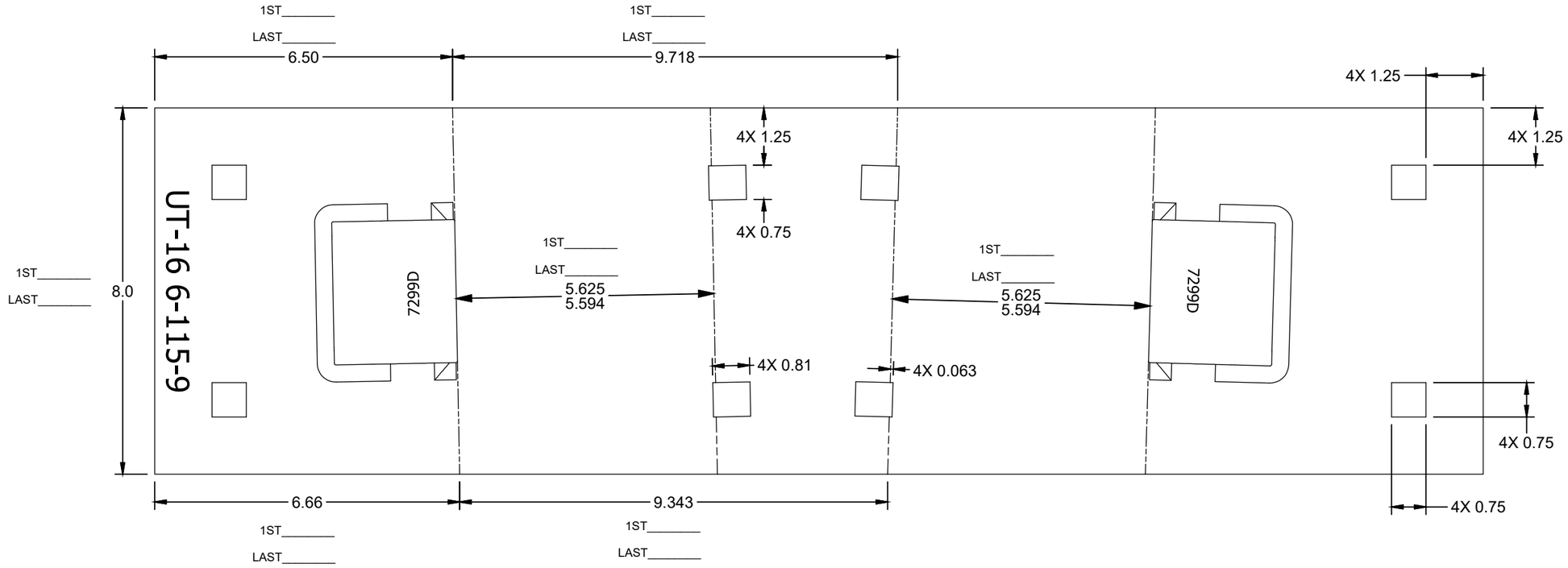

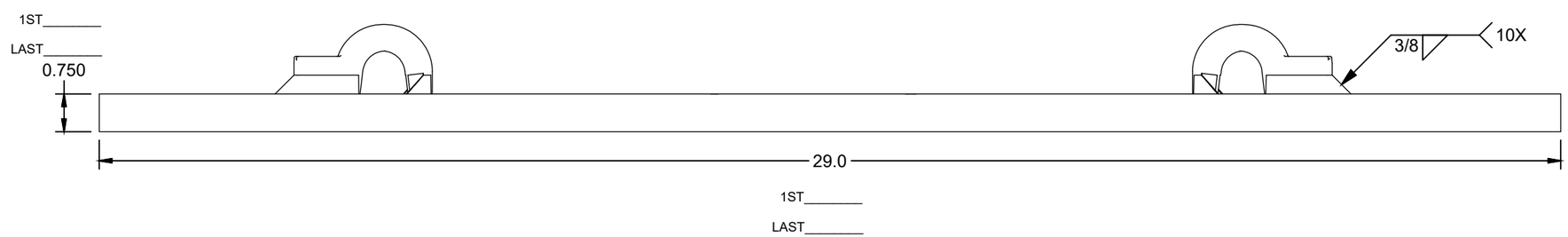

ASSEMBLY - BILL OF MATERIAL

ITEM	QTY	PART NUMBER	DESCRIPTION
1	1	RS075800A36	RAW STOCK_A36_0.750_8.000
2	2	PBN115REWS7299D	PBN_7299_DOMESTIC_FLAT
3	2	PN-PD-ECLIPD	E-CLIP_RH_DOMESTIC

UNLESS OTHERWISE SPECIFIED DIMENSIONS ARE IN INCHES

.X	.XX	.XXX	ANGLE
± .125	± .063	± .031	± 1/4°

DRAWN	S.KENT	2/17/2020
CHECK	C.TAYLOR	2/18/2020
SHEET 1 OF 1	SIZE B	

C:\Unitrac\Plating-Turnout\AREMA\ZTPA3155.idw

UNITRAC RAILROAD MATERIALS, INC.

PO BOX 7098
KNOXVILLE, TN 37921

TITLE
PLATE TO_115RE_8-10_09_PAN_FLAT_SQ_AREA 112 03_MOD-D_DOMESTIC

IN MAS	DRAWING NO.	REV
2/18/2020	ZTPA3155	

THE DOCUMENT AND THE DATA DISCLOSED HERE IN OR HERE WITH IS NOT TO BE REPRODUCED, USED, OR DISCLOSED IN WHOLE OR IN PART TO ANYONE WITHOUT THE PERMISSION OF UNITRAC RAILROAD MATERIALS INC.

SIGN OFF BLOCK

INITIALS AND DATE ALLOW PROCESS CONTINUATION

CHECK MATERIAL RECEIVED AGAINST PRINT

SAW CUT ENDS MUST BE CUT SQUARE WITHIN 1/16"

RECORD ACTUAL DIMENSIONS FOR 1ST AND LAST PART.

S.O. # _____

	INITIALS	DATE
SAW		
MILL		
STAMPING/ETCHING		
DRILLING		
WELDING		
ASSEMBLY		
PUNCHING		

COMMENTS _____

IF ANY DIMENSION DOES NOT MEET TOLERANCES ON THIS DRAWING STOP PROCESS AND NOTIFY SUPERVISOR

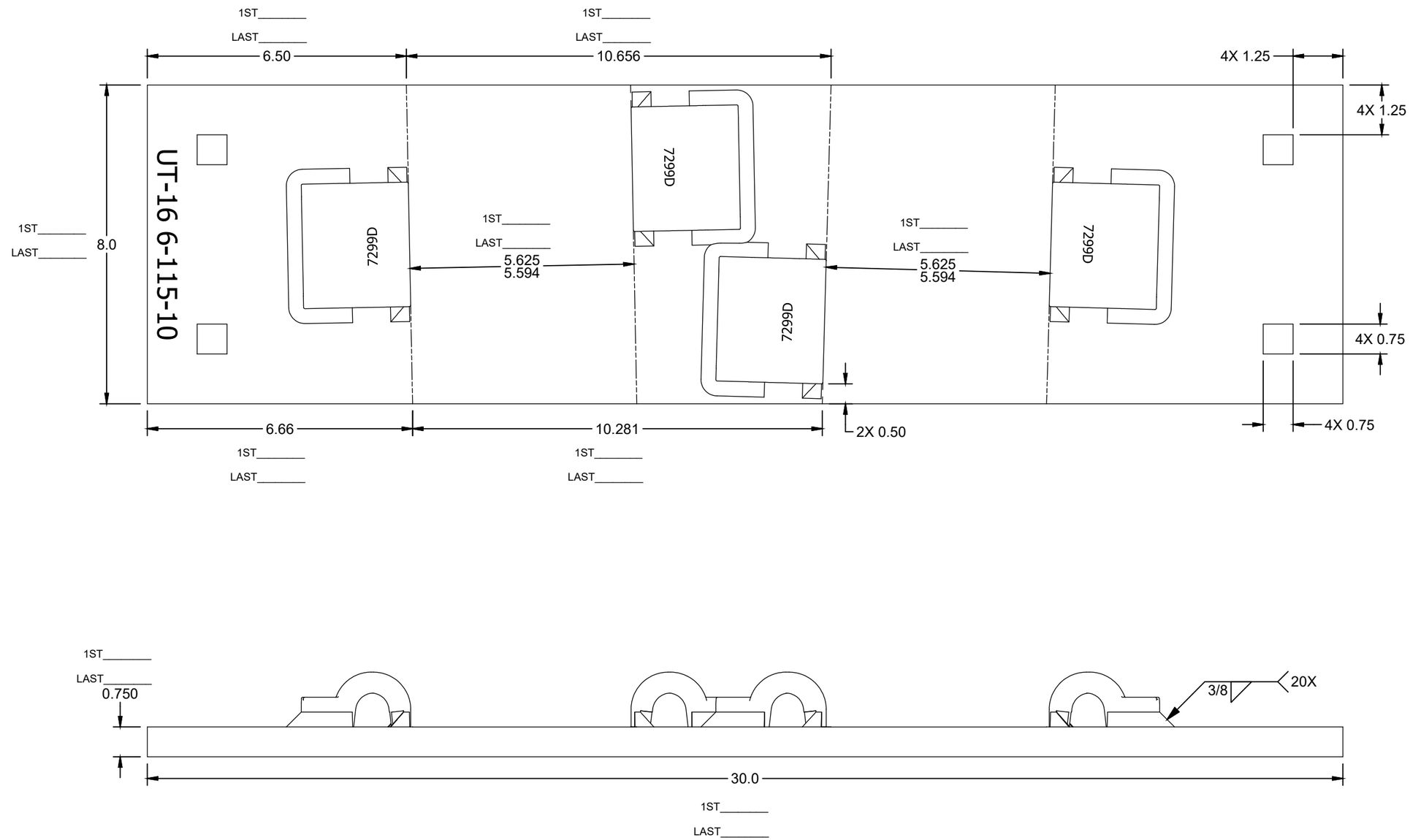

ASSEMBLY - BILL OF MATERIAL

ITEM	QTY	PART NUMBER	DESCRIPTION
1	1	RS075800A36	RAW STOCK_A36_0.750_8.000
2	4	PBN115REWS7299D	PBN_7299_DOMESTIC_FLAT
3	4	PN-PD-ECLIPD	E-CLIP_RH_DOMESTIC

UNLESS OTHERWISE SPECIFIED DIMENSIONS ARE IN INCHES

.X	.XX	.XXX	ANGLE
± .125	± .063	± .031	± 1/4°

DRAWN	S.KENT	2/17/2020
CHECK	C.TAYLOR	2/18/2020
SHEET 1 OF 1	SIZE B	

C:\Unitrac\Plating-Turnout\AREMA\ZTPA3156.idw

UNITRAC RAILROAD MATERIALS, INC.

PO BOX 7098
KNOXVILLE, TN 37921

TITLE
PLATE TO_115RE_8-10_10_PAN_FLAT_SQ_AREA 112 03_MOD-D_DOMESTIC

IN MAS	DRAWING NO.	REV
2/18/2020	ZTPA3156	

THE DOCUMENT AND THE DATA DISCLOSED HERE IN OR HERE WITH IS NOT TO BE REPRODUCED, USED, OR DISCLOSED IN WHOLE OR IN PART TO ANYONE WITHOUT THE PERMISSION OF UNITRAC RAILROAD MATERIALS INC.

SIGN OFF BLOCK

INITIALS AND DATE ALLOW PROCESS CONTINUATION

CHECK MATERIAL RECEIVED AGAINST PRINT

SAW CUT ENDS MUST BE CUT SQUARE WITHIN 1/16"

RECORD ACTUAL DIMENSIONS FOR 1ST AND LAST PART.

S.O. # _____

	INITIALS	DATE
SAW		
MILL		
STAMPING/ETCHING		
DRILLING		
WELDING		
ASSEMBLY		
PUNCHING		

COMMENTS _____

IF ANY DIMENSION DOES NOT MEET TOLERANCES ON THIS DRAWING STOP PROCESS AND NOTIFY SUPERVISOR

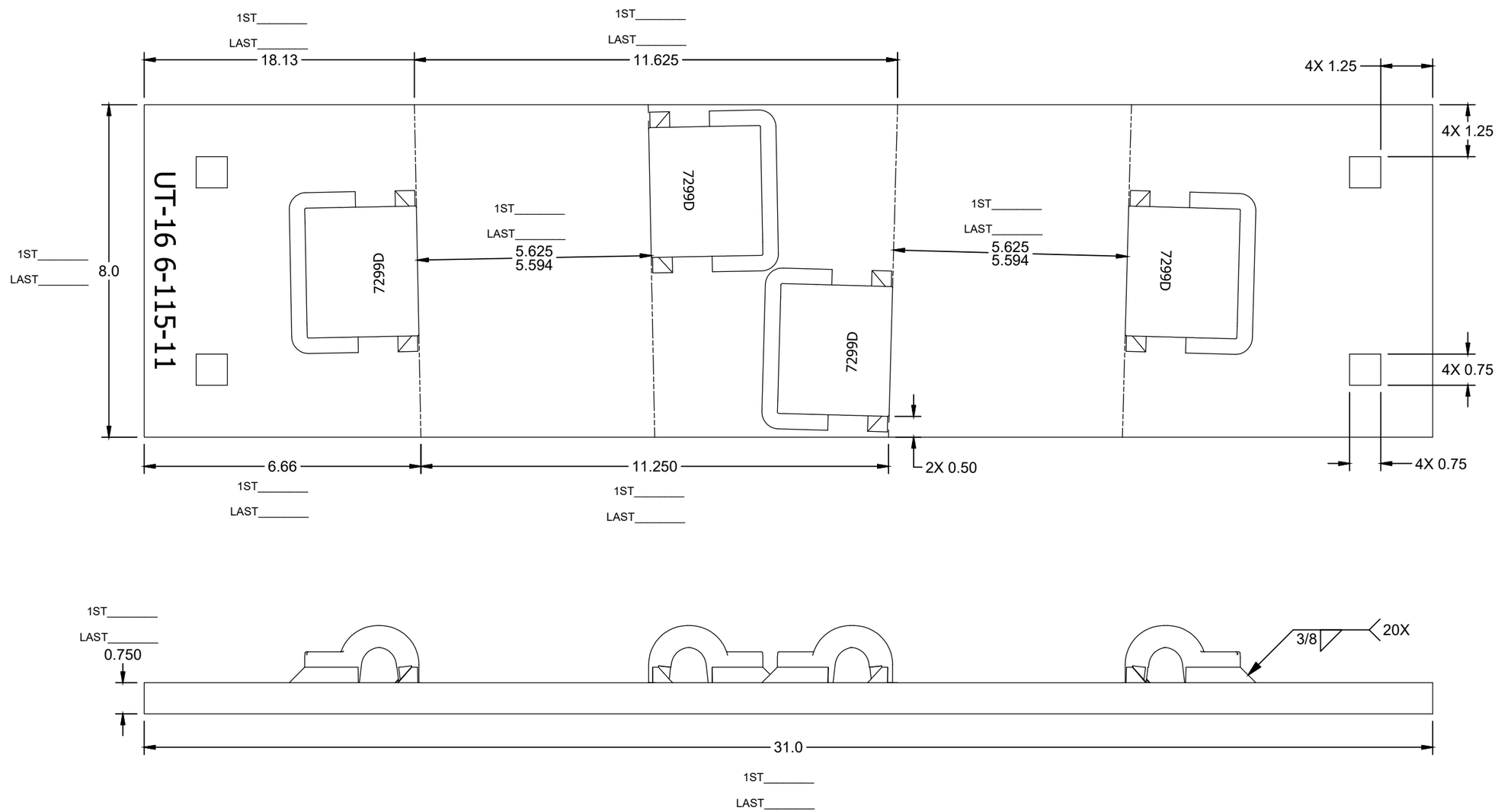

ASSEMBLY - BILL OF MATERIAL

ITEM	QTY	PART NUMBER	DESCRIPTION
1	1	RS075800A36	RAW STOCK_A36_0.750_8.000
2	4	PBN115REWS7299D	PBN_7299_DOMESTIC_FLAT
3	4	PN-PD-ECLIPD	E-CLIP_RH_DOMESTIC

UNLESS OTHERWISE SPECIFIED DIMENSIONS ARE IN INCHES

.X	.XX	.XXX	ANGLE
± .125	± .063	± .031	± 1/4°

DRAWN	S.KENT	2/17/2020
CHECK	C.TAYLOR	2/18/2020
SHEET 1 OF 1	SIZE B	

C:\Unitrac\Plating-Turnout\AREMA\ZTPA3157.idw

UNITRAC RAILROAD MATERIALS, INC.

PO BOX 7098
KNOXVILLE, TN 37921

TITLE
PLATE TO_115RE_8-10_11_PAN_FLAT_SQ_AREA 112 03_MOD-D_DOMESTIC

IN MAS	DRAWING NO.	REV
2/18/2020	ZTPA3157	

THE DOCUMENT AND THE DATA DISCLOSED HERE IN OR HERE WITH IS NOT TO BE REPRODUCED, USED, OR DISCLOSED IN WHOLE OR IN PART TO ANYONE WITHOUT THE PERMISSION OF UNITRAC RAILROAD MATERIALS INC.

SIGN OFF BLOCK

INITIALS AND DATE ALLOW PROCESS CONTINUATION

CHECK MATERIAL RECEIVED AGAINST PRINT

SAW CUT ENDS MUST BE CUT SQUARE WITHIN 1/16"

RECORD ACTUAL DIMENSIONS FOR 1ST AND LAST PART.

S.O. # _____

	INITIALS	DATE
SAW		
MILL		
STAMPING/ETCHING		
DRILLING		
WELDING		
ASSEMBLY		
PUNCHING		

COMMENTS _____

IF ANY DIMENSION DOES NOT MEET TOLERANCES ON THIS DRAWING STOP PROCESS AND NOTIFY SUPERVISOR

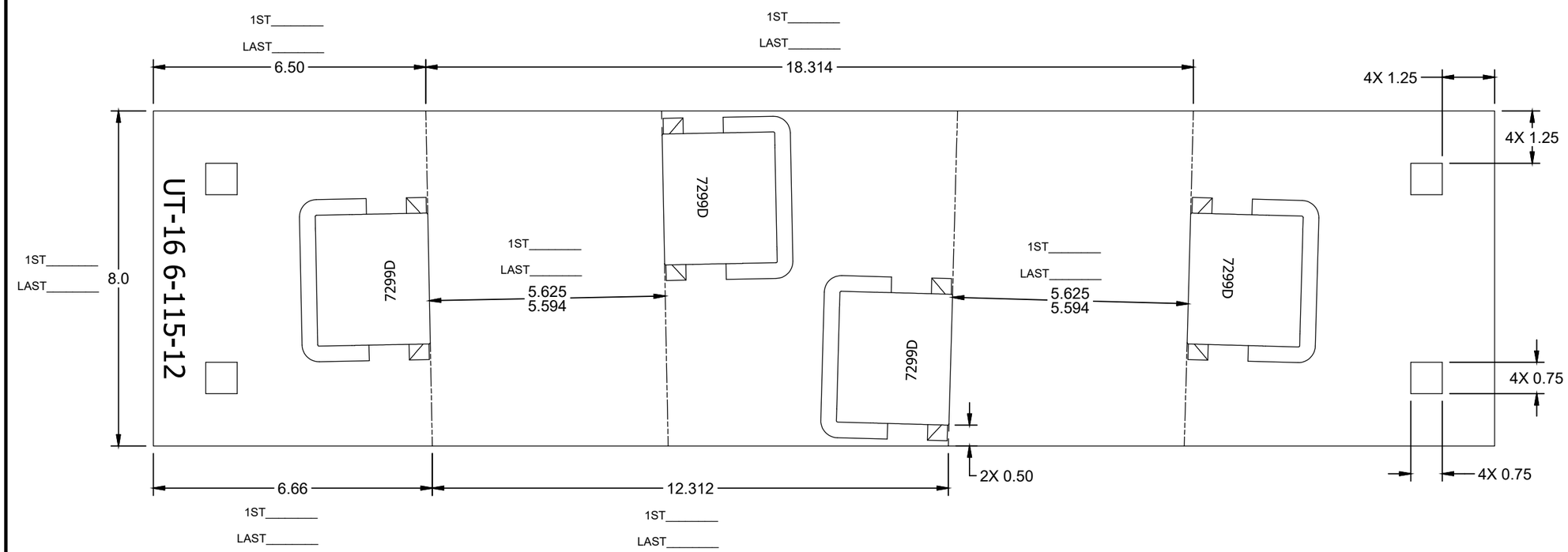

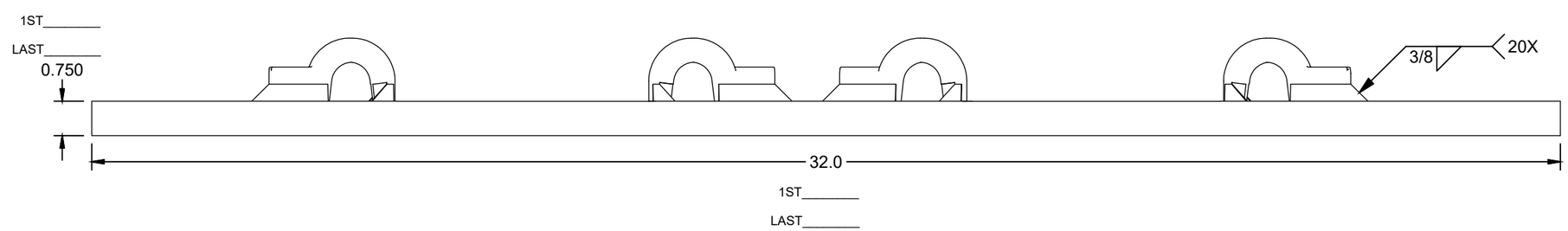

ASSEMBLY - BILL OF MATERIAL

ITEM	QTY	PART NUMBER	DESCRIPTION
1	1	RS075800A36	RAW STOCK_A36_0.750_8.000
2	4	PBN115REWS7299D	PBN_7299_DOMESTIC_FLAT
3	4	PN-PD-ECLIPD	E-CLIP_RH_DOMESTIC

UNLESS OTHERWISE SPECIFIED DIMENSIONS ARE IN INCHES

.X	.XX	.XXX	ANGLE
± .125	± .063	± .031	± 1/4°

DRAWN	S.KENT	2/17/2020
CHECK	C.TAYLOR	2/18/2020
SHEET 1 OF 1	SIZE B	

C:\Unitrac\Plating-Turnout\AREMA\ZTPA3158.idw

UNITRAC RAILROAD MATERIALS, INC.

PO BOX 7098
KNOXVILLE, TN 37921

TITLE
PLATE TO_115RE_8-10_12_PAN_FLAT_SQ_AREA 112 03_MOD-D_DOMESTIC

IN MAS	DRAWING NO.	REV
2/18/2020	ZTPA3158	

THE DOCUMENT AND THE DATA DISCLOSED HERE IN OR HERE WITH IS NOT TO BE REPRODUCED, USED, OR DISCLOSED IN WHOLE OR IN PART TO ANYONE WITHOUT THE PERMISSION OF UNITRAC RAILROAD MATERIALS INC.

SIGN OFF BLOCK

INITIALS AND DATE ALLOW PROCESS CONTINUATION

CHECK MATERIAL RECEIVED AGAINST PRINT

SAW CUT ENDS MUST BE CUT SQUARE WITHIN 1/16"

RECORD ACTUAL DIMENSIONS FOR 1ST AND LAST PART.

S.O. # _____

	INITIALS	DATE
SAW		
MILL		
STAMPING/ETCHING		
DRILLING		
WELDING		
ASSEMBLY		
PUNCHING		

COMMENTS _____

IF ANY DIMENSION DOES NOT MEET TOLERANCES ON THIS DRAWING STOP PROCESS AND NOTIFY SUPERVISOR

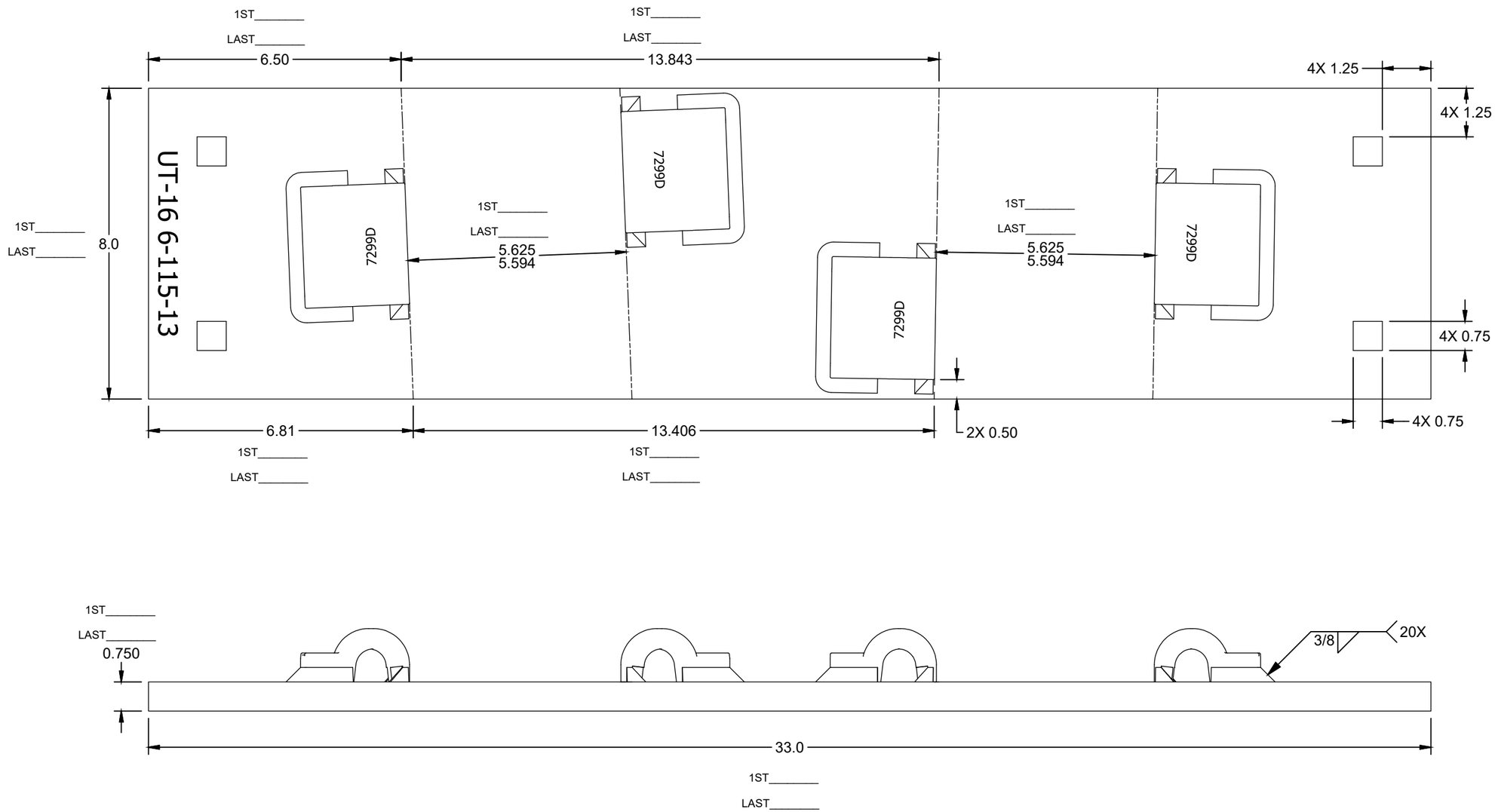

ASSEMBLY - BILL OF MATERIAL			
ITEM	QTY	PART NUMBER	DESCRIPTION
1	1	RS075800A36	RAW STOCK_A36_0.750_8.000
2	4	PBN115REWS7299D	PBN_7299_DOMESTIC_FLAT
3	4	PN-PD-ECLIPD	E-CLIP_RH_DOMESTIC

UNLESS OTHERWISE SPECIFIED DIMENSIONS ARE IN INCHES

.X	.XX	.XXX	ANGLE
± .125	± .063	± .031	± 1/4°

DRAWN	S.KENT	2/17/2020
CHECK	C.TAYLOR	2/18/2020
SHEET 1 OF 1	SIZE B	

C:\Unitrac\Plating-Turnout\AREMA\ZTPA3159.idw

UNITRAC RAILROAD MATERIALS, INC.
PO BOX 7098
KNOXVILLE, TN 37921

TITLE
PLATE TO_115RE_8-10_13_PAN_FLAT_SQ_AREA 112 03_MOD-D_DOMESTIC

IN MAS	DRAWING NO.	REV
2/18/2020	ZTPA3159	

THE DOCUMENT AND THE DATA DISCLOSED HERE IN OR HERE WITH IS NOT TO BE REPRODUCED, USED, OR DISCLOSED IN WHOLE OR IN PART TO ANYONE WITHOUT THE PERMISSION OF UNITRAC RAILROAD MATERIALS INC.

SIGN OFF BLOCK

INITIALS AND DATE ALLOW PROCESS CONTINUATION

CHECK MATERIAL RECEIVED AGAINST PRINT

SAW CUT ENDS MUST BE CUT SQUARE WITHIN 1/16"

RECORD ACTUAL DIMENSIONS FOR 1ST AND LAST PART.

S.O. # _____

	INITIALS	DATE
SAW		
MILL		
STAMPING/ETCHING		
DRILLING		
WELDING		
ASSEMBLY		
PUNCHING		

COMMENTS _____

IF ANY DIMENSION DOES NOT MEET TOLERANCES ON THIS DRAWING STOP PROCESS AND NOTIFY SUPERVISOR

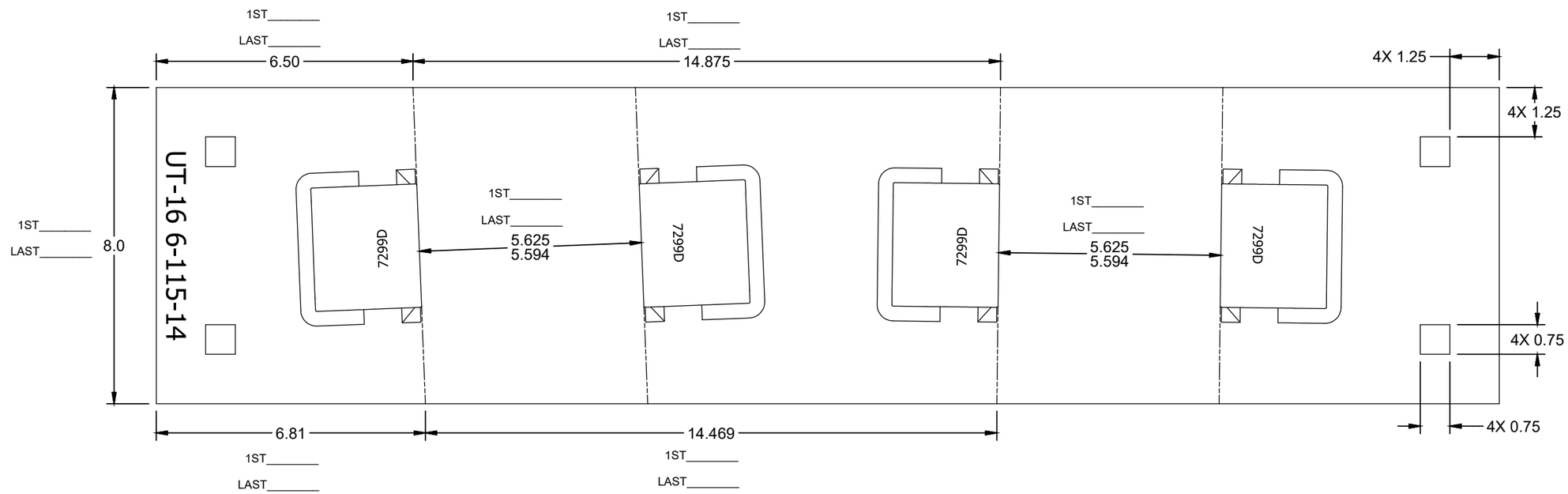

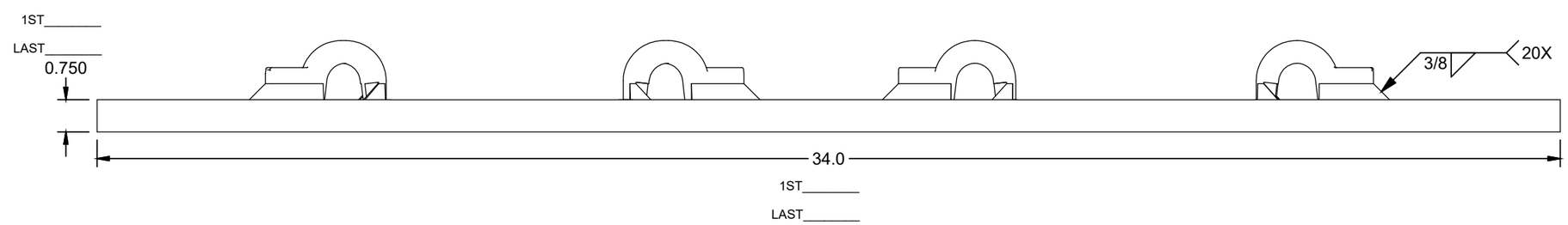

ASSEMBLY - BILL OF MATERIAL

ITEM	QTY	PART NUMBER	DESCRIPTION
1	1	RS075800A36	RAW STOCK_A36_0.750_8.000
2	4	PBN115REWS7299D	PBN_7299_DOMESTIC_FLAT
3	4	PN-PD-ECLIPD	E-CLIP_RH_DOMESTIC

UNLESS OTHERWISE SPECIFIED DIMENSIONS ARE IN INCHES

.X	.XX	.XXX	ANGLE
± .125	± .063	± .031	± 1/4°

DRAWN	S.KENT	2/17/2020
CHECK	C.TAYLOR	2/18/2020
SHEET 1 OF 1	SIZE B	

C:\Unitrac\Plating-Turnout\AREMA\ZTPA3160.idw

UNITRAC RAILROAD MATERIALS, INC.

PO BOX 7098
KNOXVILLE, TN 37921

TITLE
PLATE TO_115RE_8-10_14_PAN_FLAT_SQ_AREA 112 03_MOD-D_DOMESTIC

IN MAS	DRAWING NO.	REV
2/18/2020	ZTPA3160	

THE DOCUMENT AND THE DATA DISCLOSED HERE IN OR HERE WITH IS NOT TO BE REPRODUCED, USED, OR DISCLOSED IN WHOLE OR IN PART TO ANYONE WITHOUT THE PERMISSION OF UNITRAC RAILROAD MATERIALS INC.

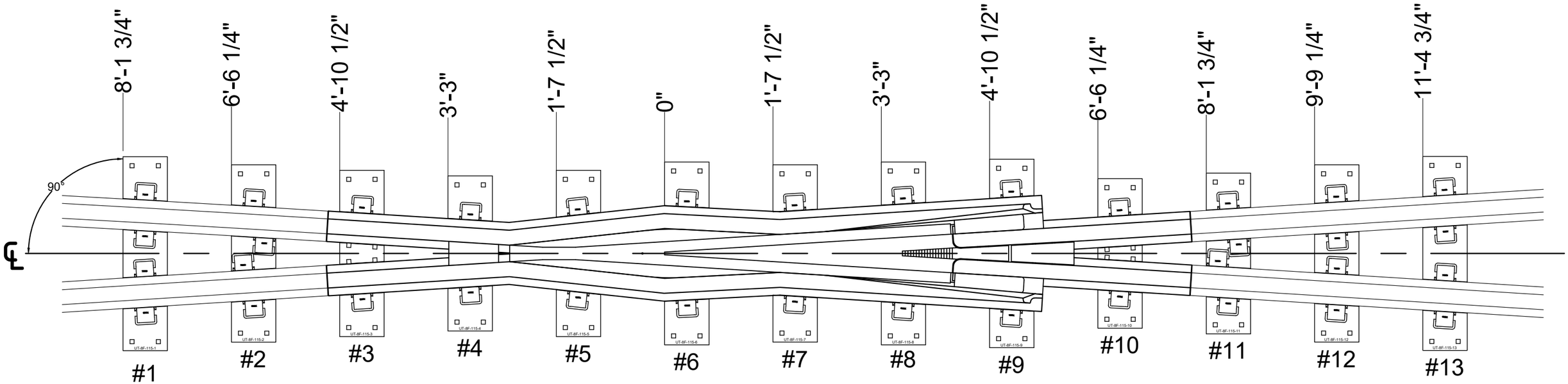

Parts List			
ITEM	QTY	PART NUMBER	DESCRIPTION
1	1	FPA3760	PLATE FROG RBMI_115RE_08_01_PAN_FLAT_SQ_AREA 623 03_MOD-D_DOMESTIC
2	1	FPA3761	PLATE FROG RBMI_115RE_08_02_PAN_FLAT_SQ_AREA 623 03_MOD-D_DOMESTIC
3	1	FPA3762	PLATE FROG RBMI_115RE_08_03_PAN_FLAT_SQ_AREA 623 03_MOD-D_DOMESTIC
4	1	FPA3763	PLATE FROG RBMI_115RE_08_04_PAN_FLAT_SQ_AREA 623 03_MOD-D_DOMESTIC
5	1	FPA3764	PLATE FROG RBMI_115RE_08_05_PAN_FLAT_SQ_AREA 623 03_MOD-D_DOMESTIC
6	1	FPA3765	PLATE FROG RBMI_115RE_08_06_PAN_FLAT_SQ_AREA 623 03_MOD-D_DOMESTIC
7	1	FPA3766	PLATE FROG RBMI_115RE_08_07_PAN_FLAT_SQ_AREA 623 03_MOD-D_DOMESTIC
8	1	FPA3767	PLATE FROG RBMI_115RE_08_08_PAN_FLAT_SQ_AREA 623 03_MOD-D_DOMESTIC
9	1	FPA3768	PLATE FROG RBMI_115RE_08_09_PAN_FLAT_SQ_AREA 623 03_MOD-D_DOMESTIC
10	1	FPA3769	PLATE FROG RBMI_115RE_08_10_PAN_FLAT_SQ_AREA 623 03_MOD-D_DOMESTIC
11	1	FPA3770	PLATE FROG RBMI_115RE_08_11_PAN_FLAT_SQ_AREA 623 03_MOD-D_DOMESTIC
12	1	FPA3771	PLATE FROG RBMI_115RE_08_12_PAN_FLAT_SQ_AREA 623 03_MOD-D_DOMESTIC
13	1	FPA3772	PLATE FROG RBMI_115RE_08_13_PAN_FLAT_SQ_AREA 623 03_MOD-D_DOMESTIC

NOTES:
1. MARK EACH PLATE LOCATION PER PWI-06-009
2. PLATES TO BE PERPENDICULAR TO CENTER LINE OF FROG

UNLESS OTHERWISE SPECIFIED DIMENSIONS ARE IN INCHES

.X	.XX	.XXX	ANGLE

DRAWN	S.RAKESH	08/23/2019
CHECK	S.KENT	08/28/2019
SHEET 1 OF 1	SIZE B	

C:\UNITRAC\FROG LAYOUTS\FPP1166

UNITRAC RAILROAD MATERIALS
PO BOX 7098
KNOXVILLE, TN 37921

TITLE: PLATE PACK FROG RBMI_115RE_08_UNIV_PAN_FLAT_SQ_AREA 623 03_MOD-D_DOMESTIC

IN MAS	DRAWING NO.	REV
08/28/2019	FPP1166	----

THE DOCUMENT AND THE DATA DISCLOSED HERE IN OR HERE WITH IS NOT TO BE REPRODUCED, USED, OR DISCLOSED IN WHOLE OR IN PART TO ANYONE WITHOUT THE PERMISSION OF UNITRAC RAILROAD MATERIALS INC.

SIGN OFF BLOCK

INITIALS AND DATE ALLOW PROCESS CONTINUATION

CHECK MATERIAL RECEIVED AGAINST PRINT

SAW CUT ENDS MUST BE CUT SQUARE WITHIN 1/16"

RECORD ACTUAL DIMENSIONS FOR 1ST AND LAST PART.

S.O. # _____

	INITIALS	DATE
SAW		
MILL		
STAMPING/ETCHING		
DRILLING		
WELDING		
ASSEMBLY		
PUNCHING		

COMMENTS _____

IF ANY DIMENSION DOES NOT MEET TOLERANCES ON THIS DRAWING STOP PROCESS AND NOTIFY SUPERVISOR

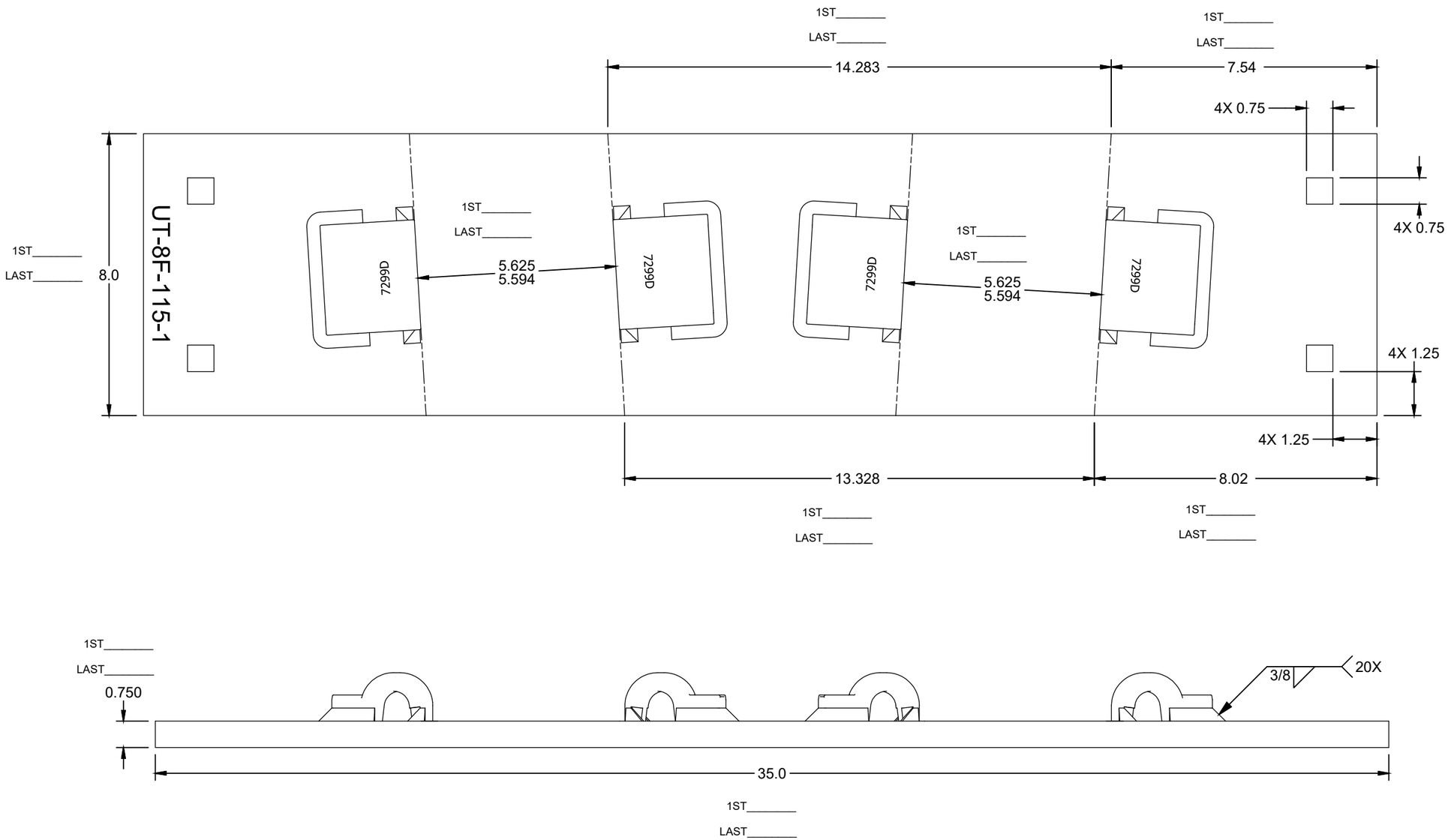

ASSEMBLY - BILL OF MATERIAL			
ITEM	QTY	PART NUMBER	DESCRIPTION
1	1	RS075800A36	RAW STOCK_A36_0.750_8.000
2	4	PBN115REWS7299D	PBN_7299_DOMESTIC_FLAT
3	4	PN-PD-ECLIPD	E-CLIP_RH_DOMESTIC

UNLESS OTHERWISE SPECIFIED DIMENSIONS ARE IN INCHES

.X	.XX	.XXX	ANGLE
± .125	± .063	± .031	± 1/4°

DRAWN	S.RAKESH	8/20/2019
CHECK	S.KENT	8/28/2019
SHEET 1 OF 1	SIZE B	

C:\Unitrac\Plating-Frog\#08\FPA3760.idw

UNITRAC RAILROAD MATERIALS
PO BOX 7098
KNOXVILLE, TN 37921

TITLE
PLATE FROG RBMI_115RE_08_01_PAN_FLAT_SQ_AREA 623
03_MOD-D_DOMESTIC

IN MAS	DRAWING NO.	REV
8/28/2019	FPA3760	

THE DOCUMENT AND THE DATA DISCLOSED HERE IN OR HERE WITH IS NOT TO BE REPRODUCED, USED, OR DISCLOSED IN WHOLE OR IN PART TO ANYONE WITHOUT THE PERMISSION OF UNITRAC RAILROAD MATERIALS INC.

SIGN OFF BLOCK

INITIALS AND DATE ALLOW PROCESS CONTINUATION

CHECK MATERIAL RECEIVED AGAINST PRINT

SAW CUT ENDS MUST BE CUT SQUARE WITHIN 1/16"

RECORD ACTUAL DIMENSIONS FOR 1ST AND LAST PART.

S.O. # _____

	INITIALS	DATE
SAW		
MILL		
STAMPING/ETCHING		
DRILLING		
WELDING		
ASSEMBLY		
PUNCHING		

COMMENTS _____

IF ANY DIMENSION DOES NOT MEET TOLERANCES ON THIS DRAWING STOP PROCESS AND NOTIFY SUPERVISOR

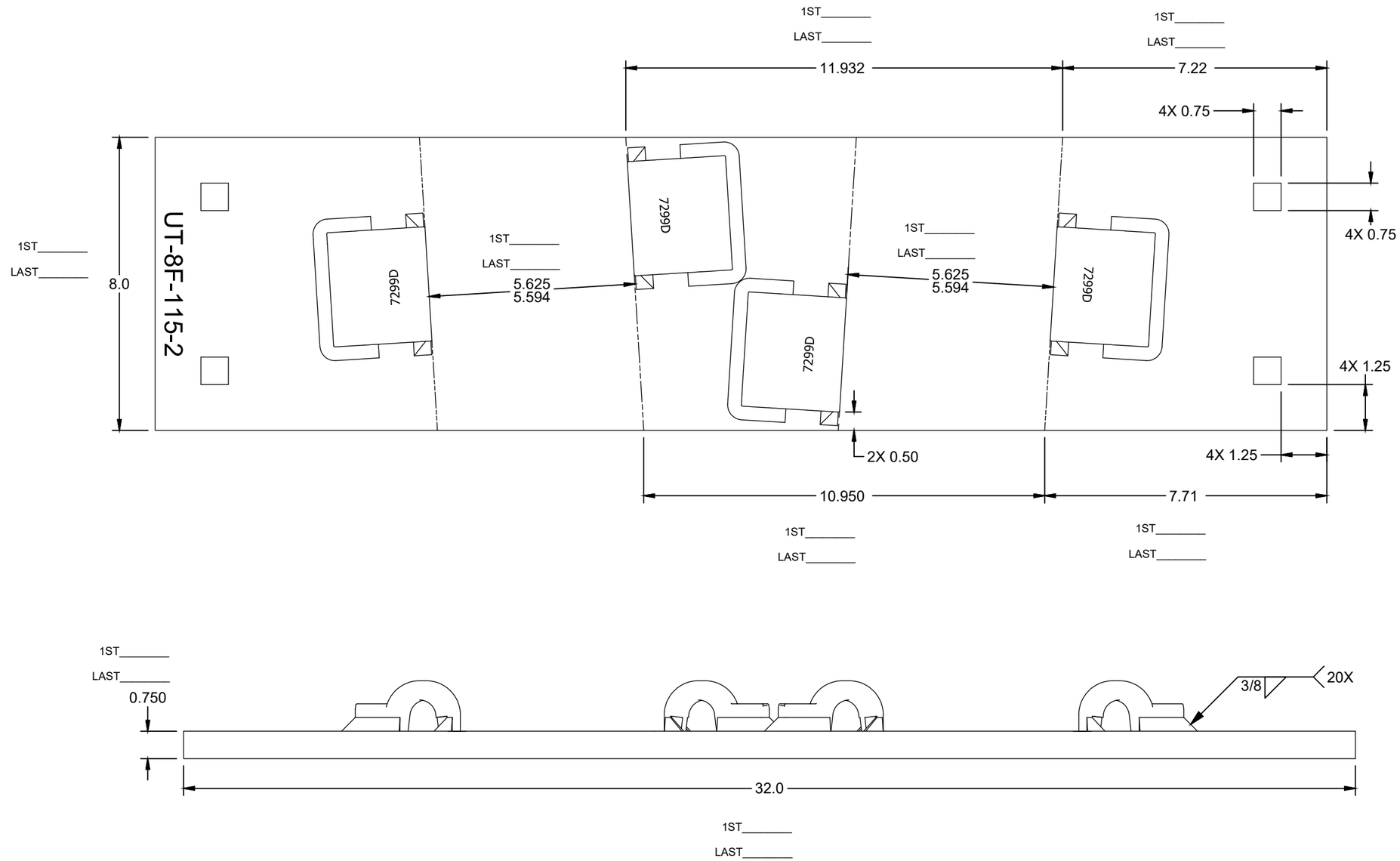

ASSEMBLY - BILL OF MATERIAL

ITEM	QTY	PART NUMBER	DESCRIPTION
1	1	RS075800A36	RAW STOCK_A36_0.750_8.000
2	4	PBN115REWS7299D	PBN_7299_DOMESTIC_FLAT
3	4	PN-PD-ECLIPD	E-CLIP_RH_DOMESTIC

UNLESS OTHERWISE SPECIFIED DIMENSIONS ARE IN INCHES

.X	.XX	.XXX	ANGLE
± .125	± .063	± .031	± 1/4°

DRAWN	S.RAKESH	8/20/2019
CHECK	S.KENT	8/28/2019
SHEET 1 OF 1	SIZE B	

C:\Unitrac\Plating-Frog\#08\FPA3761.idw

UNITRAC RAILROAD MATERIALS
PO BOX 7098
KNOXVILLE, TN 37921

TITLE
PLATE FROG RBMI_115RE_08_02_PAN_FLAT_SQ_AREA 623 03_MOD-D_DOMESTIC

IN MAS	DRAWING NO.	REV
8/28/2019	FPA3761	

THE DOCUMENT AND THE DATA DISCLOSED HERE IN OR HERE WITH IS NOT TO BE REPRODUCED, USED, OR DISCLOSED IN WHOLE OR IN PART TO ANYONE WITHOUT THE PERMISSION OF UNITRAC RAILROAD MATERIALS INC.

SIGN OFF BLOCK

INITIALS AND DATE ALLOW PROCESS CONTINUATION

CHECK MATERIAL RECEIVED AGAINST PRINT

SAW CUT ENDS MUST BE CUT SQUARE WITHIN 1/16"

RECORD ACTUAL DIMENSIONS FOR 1ST AND LAST PART.

S.O. # _____

	INITIALS	DATE
SAW		
MILL		
STAMPING/ETCHING		
DRILLING		
WELDING		
ASSEMBLY		
PUNCHING		

COMMENTS _____

IF ANY DIMENSION DOES NOT MEET TOLERANCES ON THIS DRAWING STOP PROCESS AND NOTIFY SUPERVISOR

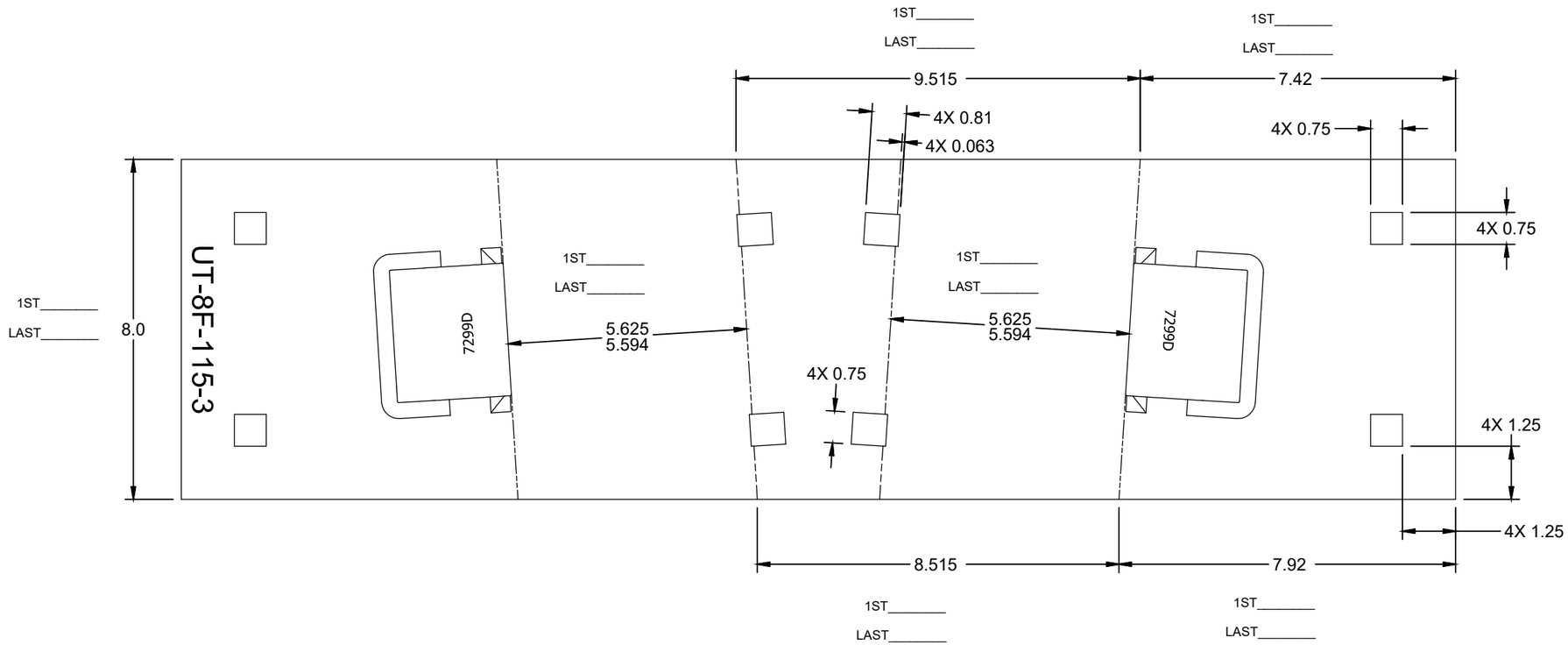

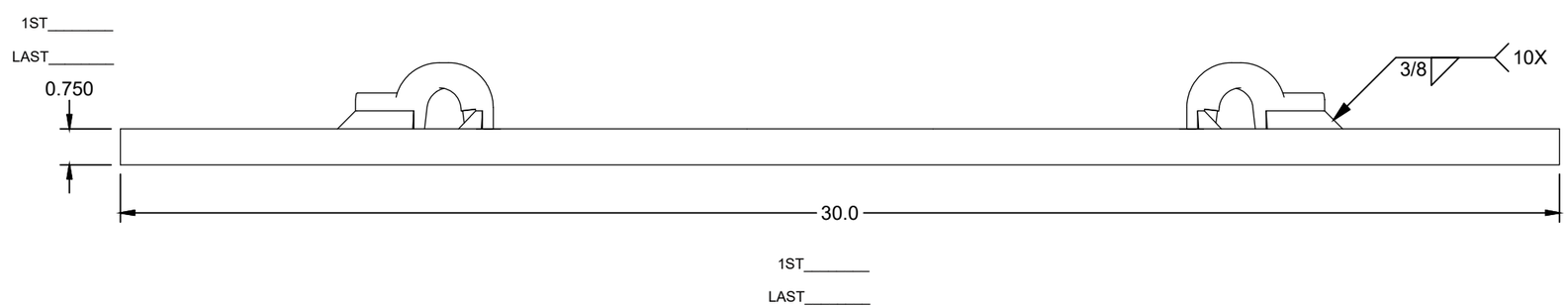

ASSEMBLY - BILL OF MATERIAL

ITEM	QTY	PART NUMBER	DESCRIPTION
1	1	RS075800A36	RAW STOCK_A36_0.750_8.000
2	2	PBN115REWS7299D	PBN_7299_DOMESTIC_FLAT
3	2	PN-PD-ECLIPD	E-CLIP_RH_DOMESTIC

UNLESS OTHERWISE SPECIFIED DIMENSIONS ARE IN INCHES

.X	.XX	.XXX	ANGLE
± .125	± .063	± .031	± 1/4°

DRAWN	S.RAKESH	8/20/2019
CHECK	S.KENT	8/28/2019
SHEET 1 OF 1	SIZE B	

C:\Unitrac\Plating-Frog\#08\FPA3762.idw

UNITRAC RAILROAD MATERIALS
PO BOX 7098
KNOXVILLE, TN 37921

TITLE
PLATE FROG RBMI_115RE_08_03_PAN_FLAT_SQ_AREA 623 03_MOD-D_DOMESTIC

IN MAS	DRAWING NO.	REV
08/28/2019	FPA3762	

THE DOCUMENT AND THE DATA DISCLOSED HERE IN OR HERE WITH IS NOT TO BE REPRODUCED, USED, OR DISCLOSED IN WHOLE OR IN PART TO ANYONE WITHOUT THE PERMISSION OF UNITRAC RAILROAD MATERIALS INC.

SIGN OFF BLOCK

INITIALS AND DATE ALLOW PROCESS CONTINUATION

CHECK MATERIAL RECEIVED AGAINST PRINT

SAW CUT ENDS MUST BE CUT SQUARE WITHIN 1/16"

RECORD ACTUAL DIMENSIONS FOR 1ST AND LAST PART.

S.O. # _____

	INITIALS	DATE
SAW		
MILL		
STAMPING/ETCHING		
DRILLING		
WELDING		
ASSEMBLY		
PUNCHING		

COMMENTS _____

IF ANY DIMENSION DOES NOT MEET TOLERANCES ON THIS DRAWING STOP PROCESS AND NOTIFY SUPERVISOR

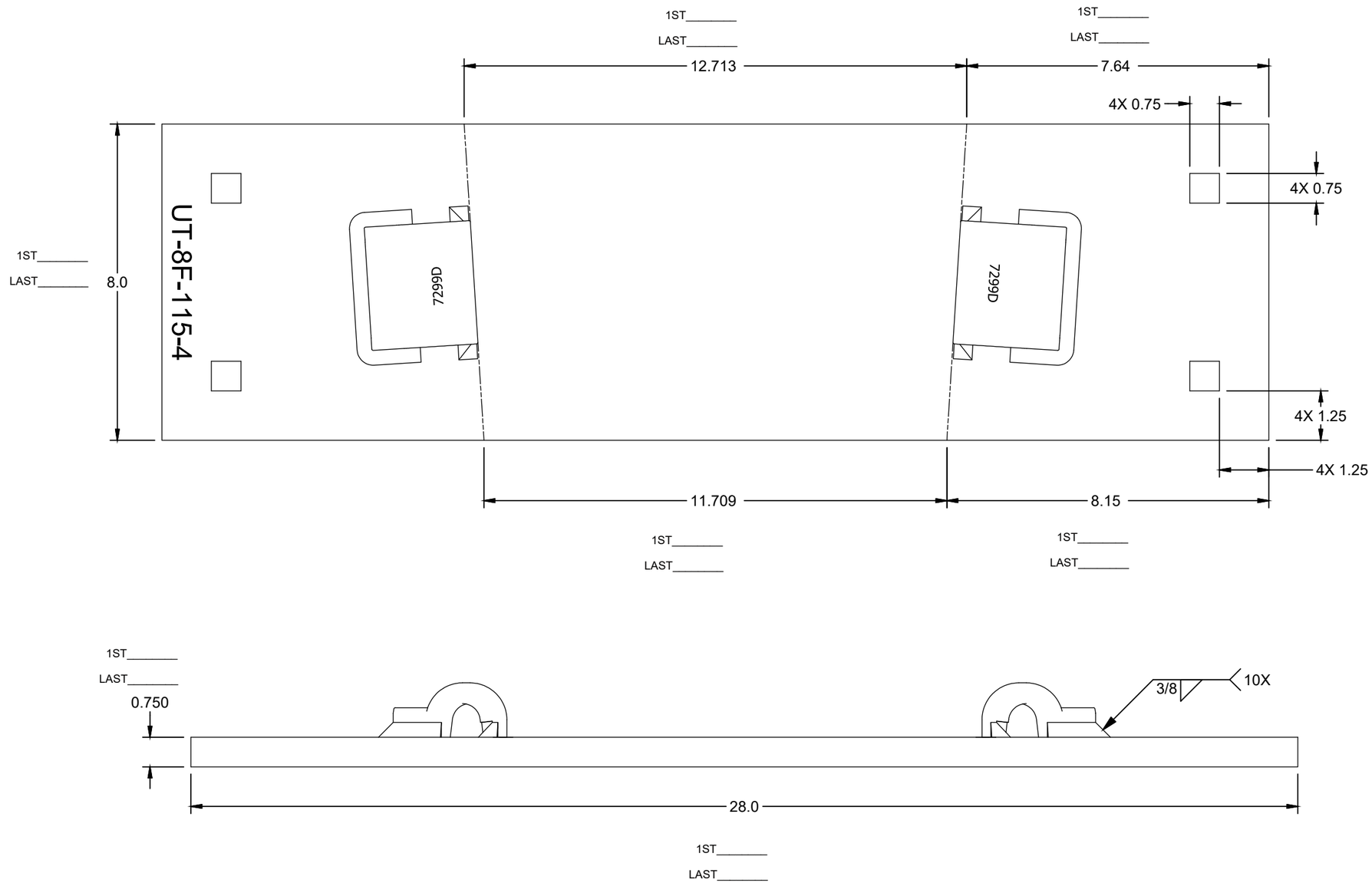

ASSEMBLY - BILL OF MATERIAL

ITEM	QTY	PART NUMBER	DESCRIPTION
1	1	RS075800A36	RAW STOCK_A36_0.750_8.000
2	2	PBN115REWS7299D	PBN_7299_DOMESTIC_FLAT
3	2	PN-PD-ECLIPD	E-CLIP_RH_DOMESTIC

UNLESS OTHERWISE SPECIFIED DIMENSIONS ARE IN INCHES

.X	.XX	.XXX	ANGLE
± .125	± .063	± .031	± 1/4°

DRAWN	S.RAKESH	8/20/2019
CHECK	S.KENT	8/28/2019
SHEET 1 OF 1	SIZE B	

C:\Unitrac\Plating-Frog\#08\FPA3763.idw

UNITRAC RAILROAD MATERIALS
PO BOX 7098
KNOXVILLE, TN 37921

TITLE
PLATE FROG RBMI_115RE_08_04_PAN_FLAT_SQ_AREA 623 03_MOD-D_DOMESTIC

IN MAS	DRAWING NO.	REV
08/28/2019	FPA3763	

THE DOCUMENT AND THE DATA DISCLOSED HERE IN OR HERE WITH IS NOT TO BE REPRODUCED, USED, OR DISCLOSED IN WHOLE OR IN PART TO ANYONE WITHOUT THE PERMISSION OF UNITRAC RAILROAD MATERIALS INC.

SIGN OFF BLOCK

INITIALS AND DATE ALLOW PROCESS CONTINUATION

CHECK MATERIAL RECEIVED AGAINST PRINT

SAW CUT ENDS MUST BE CUT SQUARE WITHIN 1/16"

RECORD ACTUAL DIMENSIONS FOR 1ST AND LAST PART.

S.O. # _____

	INITIALS	DATE
SAW		
MILL		
STAMPING/ETCHING		
DRILLING		
WELDING		
ASSEMBLY		
PUNCHING		

COMMENTS _____

IF ANY DIMENSION DOES NOT MEET TOLERANCES ON THIS DRAWING STOP PROCESS AND NOTIFY SUPERVISOR

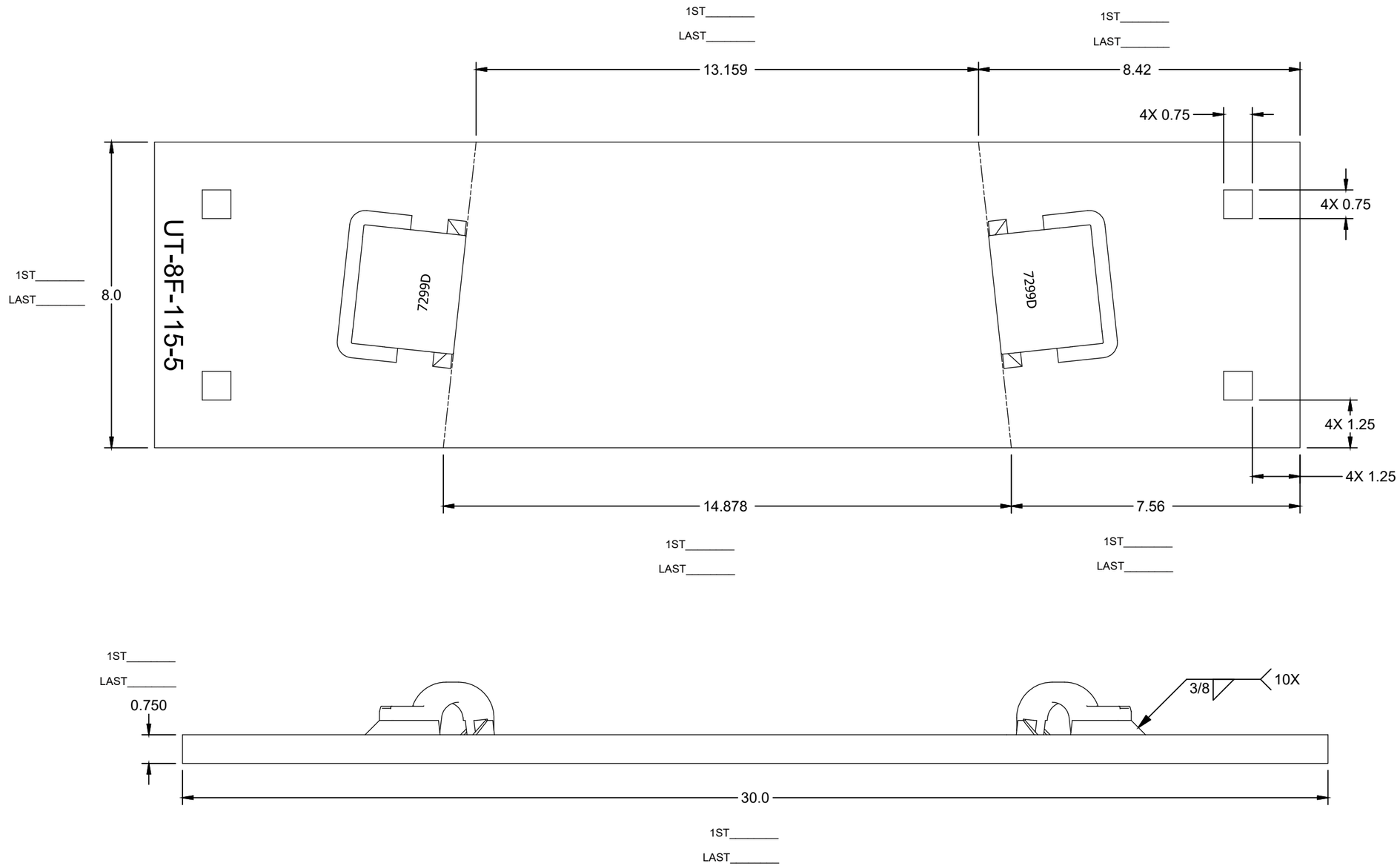

ASSEMBLY - BILL OF MATERIAL

ITEM	QTY	PART NUMBER	DESCRIPTION
1	1	RS075800A36	RAW STOCK_A36_0.750_8.000
2	2	PBN115REWS7299D	PBN_7299_DOMESTIC_FLAT
3	2	PN-PD-ECLIPD	E-CLIP_RH_DOMESTIC

UNLESS OTHERWISE SPECIFIED DIMENSIONS ARE IN INCHES

.X	.XX	.XXX	ANGLE
± .125	± .063	± .031	± 1/4°

DRAWN	S.RAKESH	8/20/2019
CHECK	S.KENT	8/28/2019
SHEET 1 OF 1	SIZE B	

C:\Unitrac\Plating-Frog\#08\FPA3764.idw

UNITRAC RAILROAD MATERIALS
PO BOX 7098
KNOXVILLE, TN 37921

TITLE
PLATE FROG RBMI_115RE_08_05_PAN_FLAT_SQ_AREA 623 03_MOD-D_DOMESTIC

IN MAS	DRAWING NO.	REV
08/28/2019	FPA3764	

THE DOCUMENT AND THE DATA DISCLOSED HERE IN OR HERE WITH IS NOT TO BE REPRODUCED, USED, OR DISCLOSED IN WHOLE OR IN PART TO ANYONE WITHOUT THE PERMISSION OF UNITRAC RAILROAD MATERIALS INC.

SIGN OFF BLOCK

INITIALS AND DATE ALLOW PROCESS CONTINUATION

CHECK MATERIAL RECEIVED AGAINST PRINT

SAW CUT ENDS MUST BE CUT SQUARE WITHIN 1/16"

RECORD ACTUAL DIMENSIONS FOR 1ST AND LAST PART.

S.O. # _____

	INITIALS	DATE
SAW		
MILL		
STAMPING/ETCHING		
DRILLING		
WELDING		
ASSEMBLY		
PUNCHING		

COMMENTS _____

IF ANY DIMENSION DOES NOT MEET TOLERANCES ON THIS DRAWING STOP PROCESS AND NOTIFY SUPERVISOR

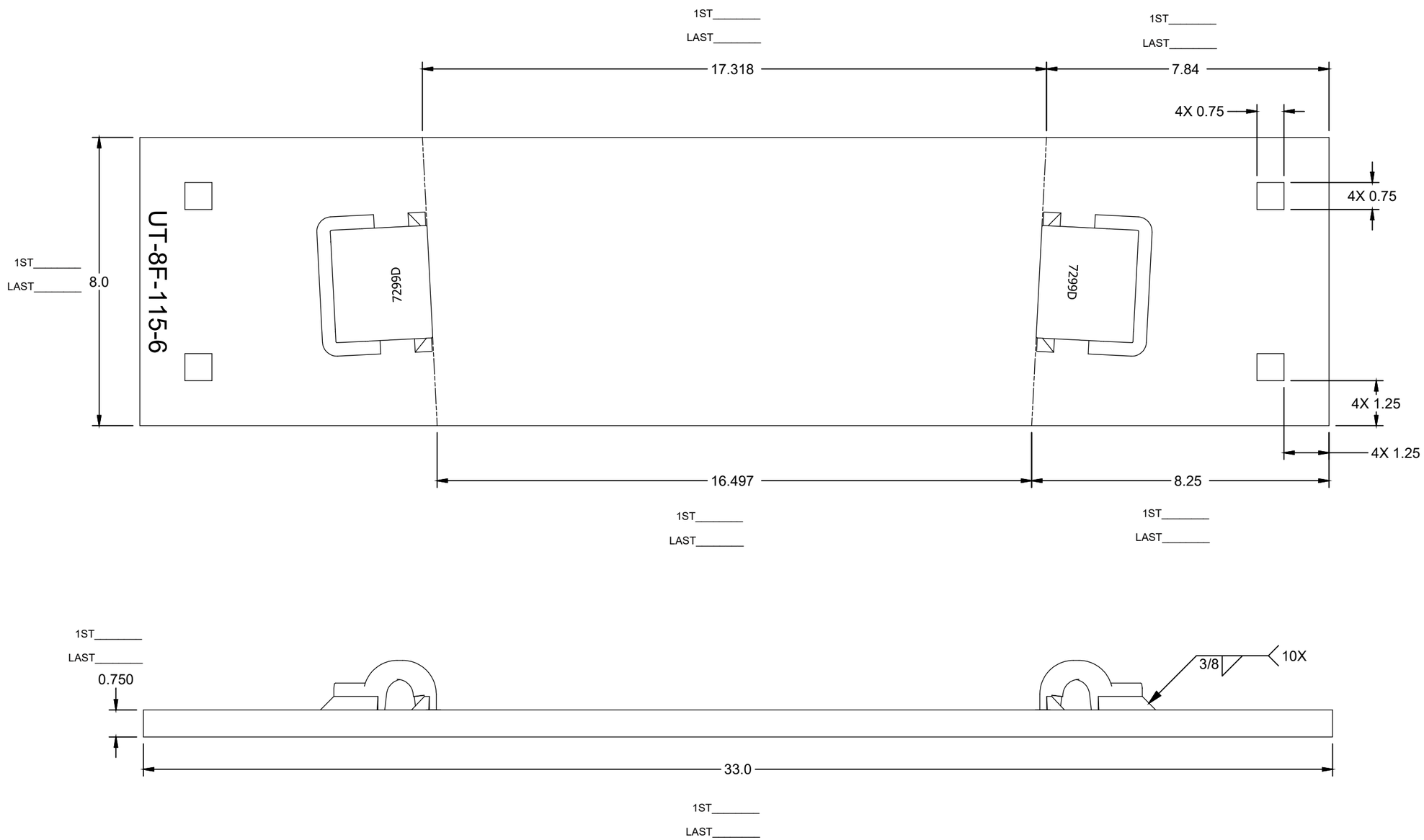

ASSEMBLY - BILL OF MATERIAL

ITEM	QTY	PART NUMBER	DESCRIPTION
1	1	RS075800A36	RAW STOCK_A36_0.750_8.000
3	2	PN-PD-ECLIPD	E-CLIP_RH_DOMESTIC
2	2	PBN115REWS7299D	PBN_7299_DOMESTIC_FLAT

UNLESS OTHERWISE SPECIFIED DIMENSIONS ARE IN INCHES

.X	.XX	.XXX	ANGLE
± .125	± .063	± .031	± 1/4°

DRAWN	S.RAKESH	8/20/2019
CHECK	S.KENT	8/28/2019
SHEET 1 OF 1	SIZE B	

C:\Unitrac\Plating-Frog\#08\FPA3765.idw

UNITRAC RAILROAD MATERIALS
PO BOX 7098
KNOXVILLE, TN 37921

TITLE
PLATE FROG RBMI_115RE_08_06_PAN_FLAT_SQ_AREA 623 03_MOD-D_DOMESTIC

IN MAS	DRAWING NO.	REV
08/28/2019	FPA3765	

THE DOCUMENT AND THE DATA DISCLOSED HERE IN OR HERE WITH IS NOT TO BE REPRODUCED, USED, OR DISCLOSED IN WHOLE OR IN PART TO ANYONE WITHOUT THE PERMISSION OF UNITRAC RAILROAD MATERIALS INC.

SIGN OFF BLOCK

INITIALS AND DATE ALLOW PROCESS CONTINUATION

CHECK MATERIAL RECEIVED AGAINST PRINT

SAW CUT ENDS MUST BE CUT SQUARE WITHIN 1/16"

RECORD ACTUAL DIMENSIONS FOR 1ST AND LAST PART.

S.O. # _____

	INITIALS	DATE
SAW		
MILL		
STAMPING/ETCHING		
DRILLING		
WELDING		
ASSEMBLY		
PUNCHING		

COMMENTS _____

IF ANY DIMENSION DOES NOT MEET TOLERANCES ON THIS DRAWING STOP PROCESS AND NOTIFY SUPERVISOR

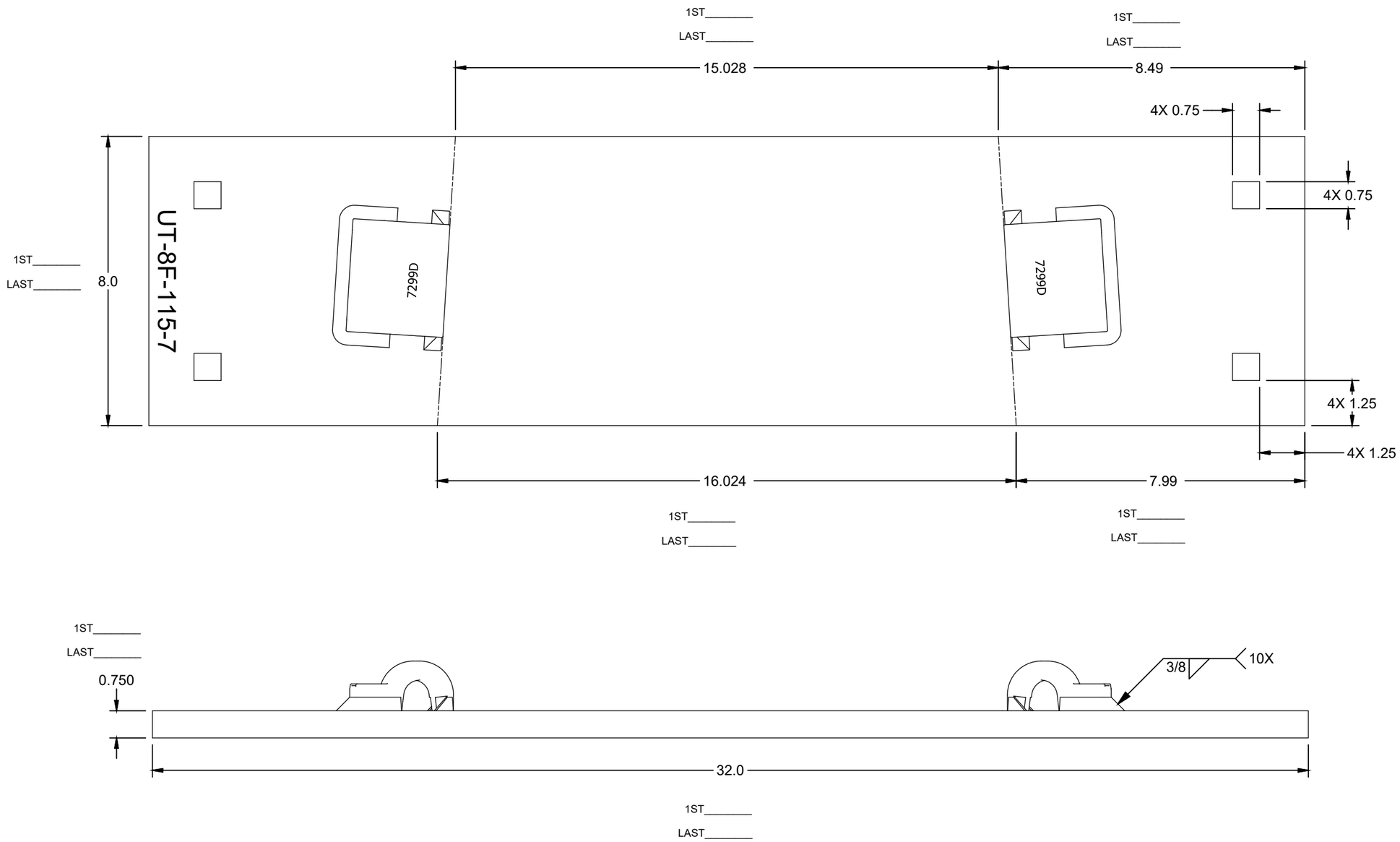

ASSEMBLY - BILL OF MATERIAL

ITEM	QTY	PART NUMBER	DESCRIPTION
1	1	RS075800A36	RAW STOCK_A36_0.750_8.000
2	2	PBN115REWS7299D	PBN_7299_DOMESTIC_FLAT
3	2	PN-PD-ECLIPD	E-CLIP_RH_DOMESTIC

UNLESS OTHERWISE SPECIFIED DIMENSIONS ARE IN INCHES

.X	.XX	.XXX	ANGLE
± .125	± .063	± .031	± 1/4°

DRAWN	S.RAKESH	8/21/2019
CHECK	S.KENT	8/28/2019
SHEET 1 OF 1	SIZE B	

C:\Unitrac\Plating-Frog\#08\FPA3766.idw

UNITRAC RAILROAD MATERIALS
PO BOX 7098
KNOXVILLE, TN 37921

TITLE
PLATE FROG RBMI_115RE_08_07_PAN_FLAT_SQ_AREA 623 03_MOD-D_DOMESTIC

IN MAS	DRAWING NO.	REV
08/28/2019	FPA3766	

THE DOCUMENT AND THE DATA DISCLOSED HERE IN OR HERE WITH IS NOT TO BE REPRODUCED, USED, OR DISCLOSED IN WHOLE OR IN PART TO ANYONE WITHOUT THE PERMISSION OF UNITRAC RAILROAD MATERIALS INC.

SIGN OFF BLOCK

INITIALS AND DATE ALLOW PROCESS CONTINUATION

CHECK MATERIAL RECEIVED AGAINST PRINT

SAW CUT ENDS MUST BE CUT SQUARE WITHIN 1/16"

RECORD ACTUAL DIMENSIONS FOR 1ST AND LAST PART.

S.O. # _____

	INITIALS	DATE
SAW		
MILL		
STAMPING/ETCHING		
DRILLING		
WELDING		
ASSEMBLY		
PUNCHING		

COMMENTS _____

IF ANY DIMENSION DOES NOT MEET TOLERANCES ON THIS DRAWING STOP PROCESS AND NOTIFY SUPERVISOR

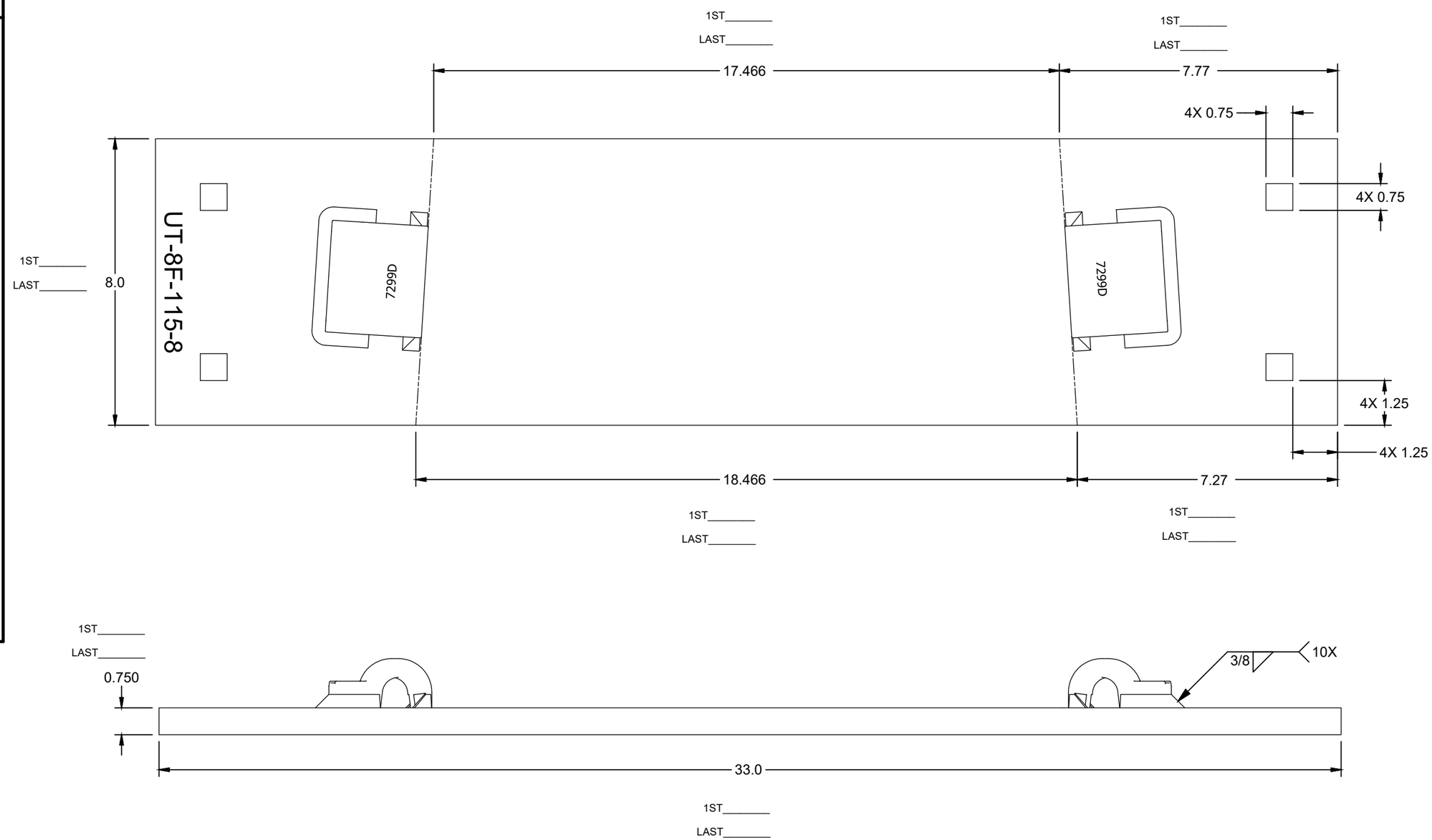

ASSEMBLY - BILL OF MATERIAL

ITEM	QTY	PART NUMBER	DESCRIPTION
1	1	RS075800A36	RAW STOCK_A36_0.750_8.000
2	2	PBN115REWS7299D	PBN_7299_DOMESTIC_FLAT
3	2	PN-PD-ECLIPD	E-CLIP_RH_DOMESTIC

UNLESS OTHERWISE SPECIFIED DIMENSIONS ARE IN INCHES

.X	.XX	.XXX	ANGLE
± .125	± .063	± .031	± 1/4°

DRAWN	S.RAKESH	8/21/2019
CHECK	S.KENT	8/28/2019
SHEET 1 OF 1	SIZE B	

C:\Unitrac\Plating-Frog\#08\FPA3767.idw

UNITRAC RAILROAD MATERIALS
PO BOX 7098
KNOXVILLE, TN 37921

TITLE
PLATE FROG RBMI_115RE_08_08_PAN_FLAT_SQ_AREA 623 03_MOD-D_DOMESTIC

IN MAS	DRAWING NO.	REV
08/28/2019	FPA3767	

THE DOCUMENT AND THE DATA DISCLOSED HERE IN OR HERE WITH IS NOT TO BE REPRODUCED, USED, OR DISCLOSED IN WHOLE OR IN PART TO ANYONE WITHOUT THE PERMISSION OF UNITRAC RAILROAD MATERIALS INC.

SIGN OFF BLOCK

INITIALS AND DATE ALLOW PROCESS CONTINUATION

CHECK MATERIAL RECEIVED AGAINST PRINT

SAW CUT ENDS MUST BE CUT SQUARE WITHIN 1/16"

RECORD ACTUAL DIMENSIONS FOR 1ST AND LAST PART.

S.O. # _____

	INITIALS	DATE
SAW		
MILL		
STAMPING/ETCHING		
DRILLING		
WELDING		
ASSEMBLY		
PUNCHING		

COMMENTS _____

IF ANY DIMENSION DOES NOT MEET TOLERANCES ON THIS DRAWING STOP PROCESS AND NOTIFY SUPERVISOR

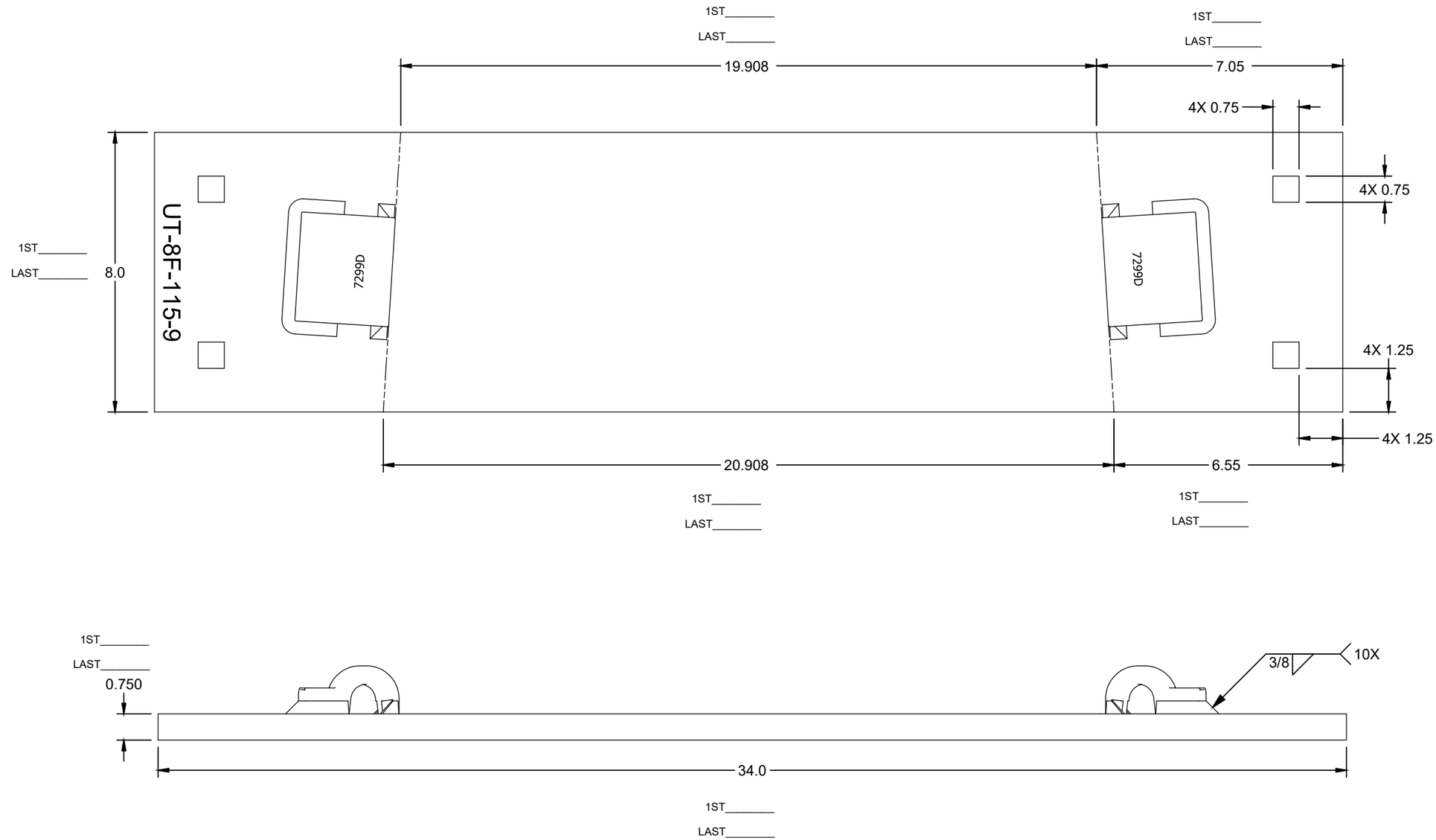

ASSEMBLY - BILL OF MATERIAL

ITEM	QTY	PART NUMBER	DESCRIPTION
1	1	RS075800A36	RAW STOCK_A36_0.750_8.000
2	2	PBN115REWS7299D	PBN_7299_DOMESTIC_FLAT
3	2	PN-PD-ECLIPD	E-CLIP_RH_DOMESTIC

UNLESS OTHERWISE SPECIFIED DIMENSIONS ARE IN INCHES

.X	.XX	.XXX	ANGLE
± .125	± .063	± .031	± 1/4°

DRAWN	S.RAKESH	8/21/2019
CHECK	S.KENT	8/28/2019
SHEET 1 OF 1	SIZE B	

C:\Unitrac\Plating-Frog\#08\FPA3768.idw

UNITRAC RAILROAD MATERIALS, INC.

PO BOX 7098
KNOXVILLE, TN 37921

TITLE
PLATE FROG RBMI_115RE_08_09_PAN_FLAT_SQ_AREA 623 03_MOD-D_DOMESTIC

IN MAS	DRAWING NO.	REV
08/28/2019	FPA3768	

THE DOCUMENT AND THE DATA DISCLOSED HERE IN OR HERE WITH IS NOT TO BE REPRODUCED, USED, OR DISCLOSED IN WHOLE OR IN PART TO ANYONE WITHOUT THE PERMISSION OF UNITRAC RAILROAD MATERIALS INC.

SIGN OFF BLOCK

INITIALS AND DATE ALLOW PROCESS CONTINUATION

CHECK MATERIAL RECEIVED AGAINST PRINT

SAW CUT ENDS MUST BE CUT SQUARE WITHIN 1/16"

RECORD ACTUAL DIMENSIONS FOR 1ST AND LAST PART.

S.O. # _____

	INITIALS	DATE
SAW		
MILL		
STAMPING/ETCHING		
DRILLING		
WELDING		
ASSEMBLY		
PUNCHING		

COMMENTS _____

IF ANY DIMENSION DOES NOT MEET TOLERANCES ON THIS DRAWING STOP PROCESS AND NOTIFY SUPERVISOR

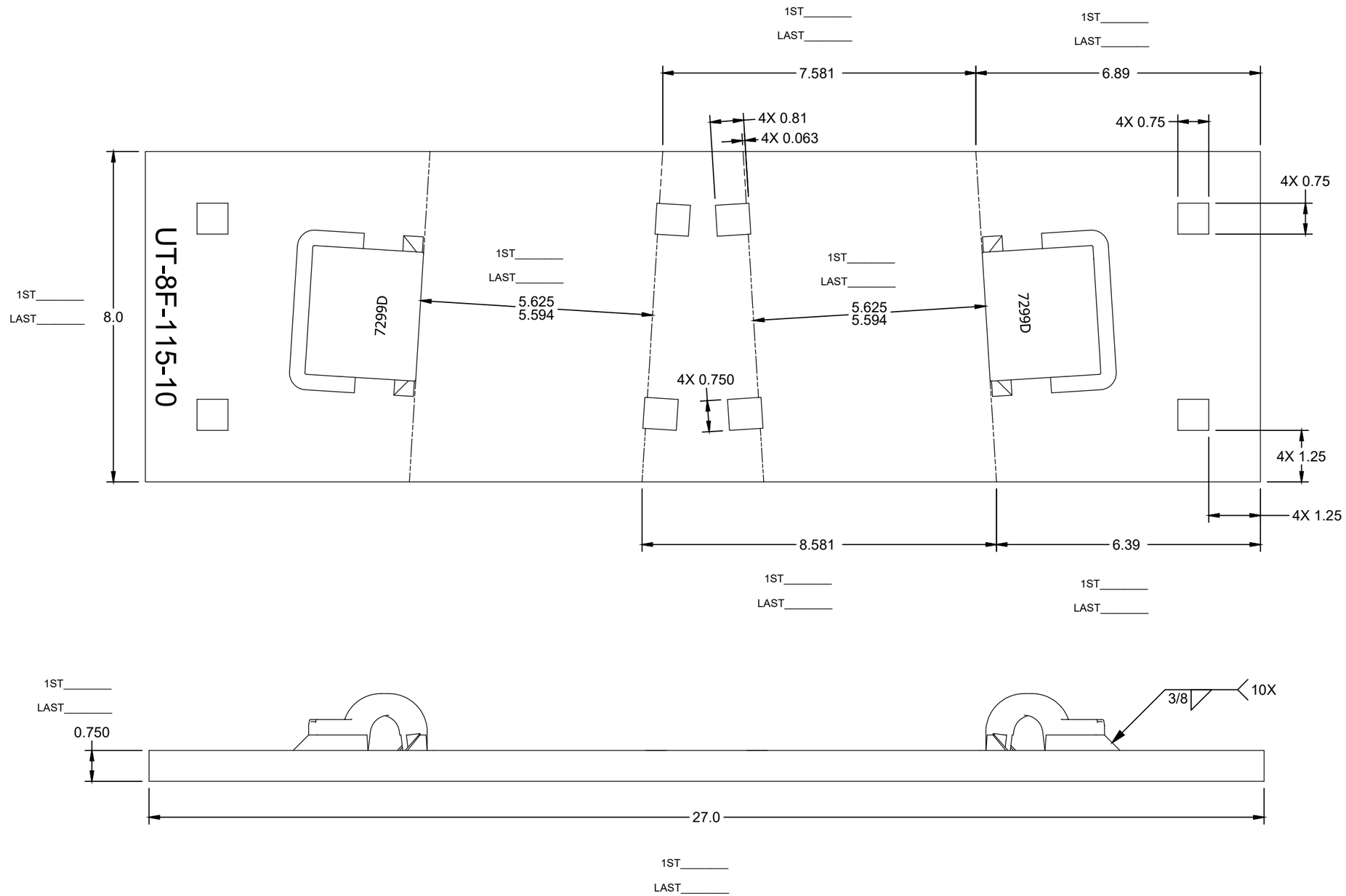

ASSEMBLY - BILL OF MATERIAL

ITEM	QTY	PART NUMBER	DESCRIPTION
1	1	RS075800A36	RAW STOCK_A36_0.750_8.000
2	2	PBN115REWS7299D	PBN_7299_DOMESTIC_FLAT
3	2	PN-PD-ECLIPD	E-CLIP_RH_DOMESTIC

UNLESS OTHERWISE SPECIFIED DIMENSIONS ARE IN INCHES

.X	.XX	.XXX	ANGLE
± .125	± .063	± .031	± 1/4°

C:\Unitrac\Plating-Frog\#08\FPA3769.idw

DRAWN	S.RAKESH	8/21/2019
CHECK	S.KENT	8/28/2019
SHEET	1 OF 1	SIZE B

UNITRAC RAILROAD MATERIALS, INC.

PO BOX 7098
KNOXVILLE, TN 37921

TITLE
PLATE FROG RBMI_115RE_08_10_PAN_FLAT_SQ_AREA 623 03_MOD-D_DOMESTIC

IN MAS	DRAWING NO.	REV
08/28/2019	FPA3769	

THE DOCUMENT AND THE DATA DISCLOSED HERE IN OR HERE WITH IS NOT TO BE REPRODUCED, USED, OR DISCLOSED IN WHOLE OR IN PART TO ANYONE WITHOUT THE PERMISSION OF UNITRAC RAILROAD MATERIALS INC.

SIGN OFF BLOCK

INITIALS AND DATE ALLOW PROCESS CONTINUATION

CHECK MATERIAL RECEIVED AGAINST PRINT

SAW CUT ENDS MUST BE CUT SQUARE WITHIN 1/16"

RECORD ACTUAL DIMENSIONS FOR 1ST AND LAST PART.

S.O. # _____

	INITIALS	DATE
SAW		
MILL		
STAMPING/ETCHING		
DRILLING		
WELDING		
ASSEMBLY		
PUNCHING		

COMMENTS _____

IF ANY DIMENSION DOES NOT MEET TOLERANCES ON THIS DRAWING STOP PROCESS AND NOTIFY SUPERVISOR

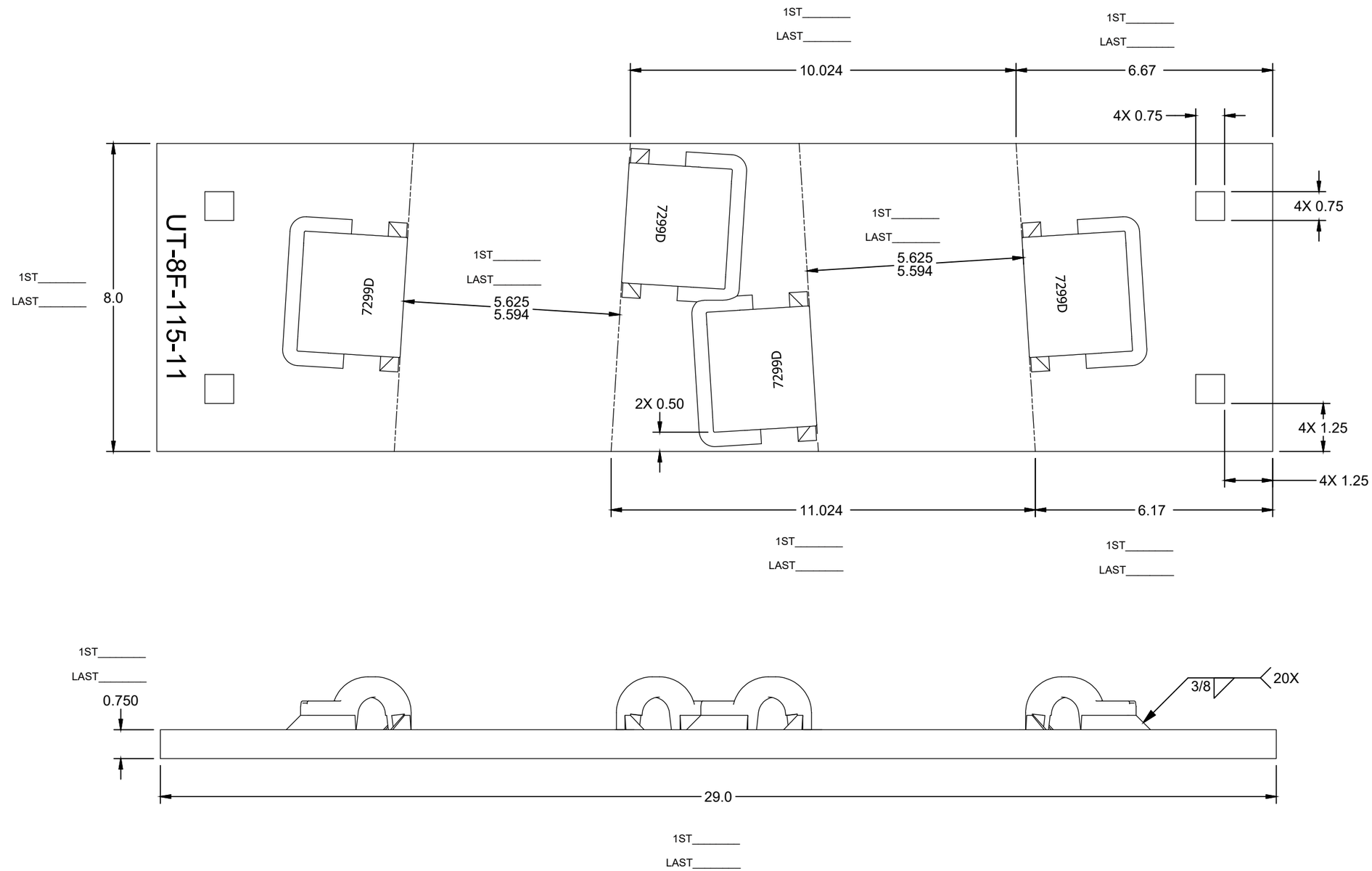

ASSEMBLY - BILL OF MATERIAL			
ITEM	QTY	PART NUMBER	DESCRIPTION
1	1	RS075800A36	RAW STOCK_A36_0.750_8.000
2	4	PBN115REWS7299D	PBN_7299_DOMESTIC_FLAT
3	4	PN-PD-ECLIPD	E-CLIP_RH_DOMESTIC

UNLESS OTHERWISE SPECIFIED DIMENSIONS ARE IN INCHES

.X	.XX	.XXX	ANGLE
± .125	± .063	± .031	± 1/4°

DRAWN	S.RAKESH	8/21/2019
CHECK	S.KENT	8/28/2019
SHEET 1 OF 1	SIZE B	

C:\Unitrac\Plating-Frog\#08\FPA3770.idw

UNITRAC RAILROAD MATERIALS, INC.

PO BOX 7098
KNOXVILLE, TN 37921

TITLE
PLATE FROG RBMI_115RE_08_11_PAN_FLAT_SQ_AREA 623 03_MOD-D_DOMESTIC

IN MAS	DRAWING NO.	REV
08/28/2019	FPA3770	

THE DOCUMENT AND THE DATA DISCLOSED HERE IN OR HERE WITH IS NOT TO BE REPRODUCED, USED, OR DISCLOSED IN WHOLE OR IN PART TO ANYONE WITHOUT THE PERMISSION OF UNITRAC RAILROAD MATERIALS INC.

SIGN OFF BLOCK

INITIALS AND DATE ALLOW PROCESS CONTINUATION

CHECK MATERIAL RECEIVED AGAINST PRINT

SAW CUT ENDS MUST BE CUT SQUARE WITHIN 1/16"

RECORD ACTUAL DIMENSIONS FOR 1ST AND LAST PART.

S.O. # _____

	INITIALS	DATE
SAW		
MILL		
STAMPING/ETCHING		
DRILLING		
WELDING		
ASSEMBLY		
PUNCHING		

COMMENTS _____

IF ANY DIMENSION DOES NOT MEET TOLERANCES ON THIS DRAWING STOP PROCESS AND NOTIFY SUPERVISOR

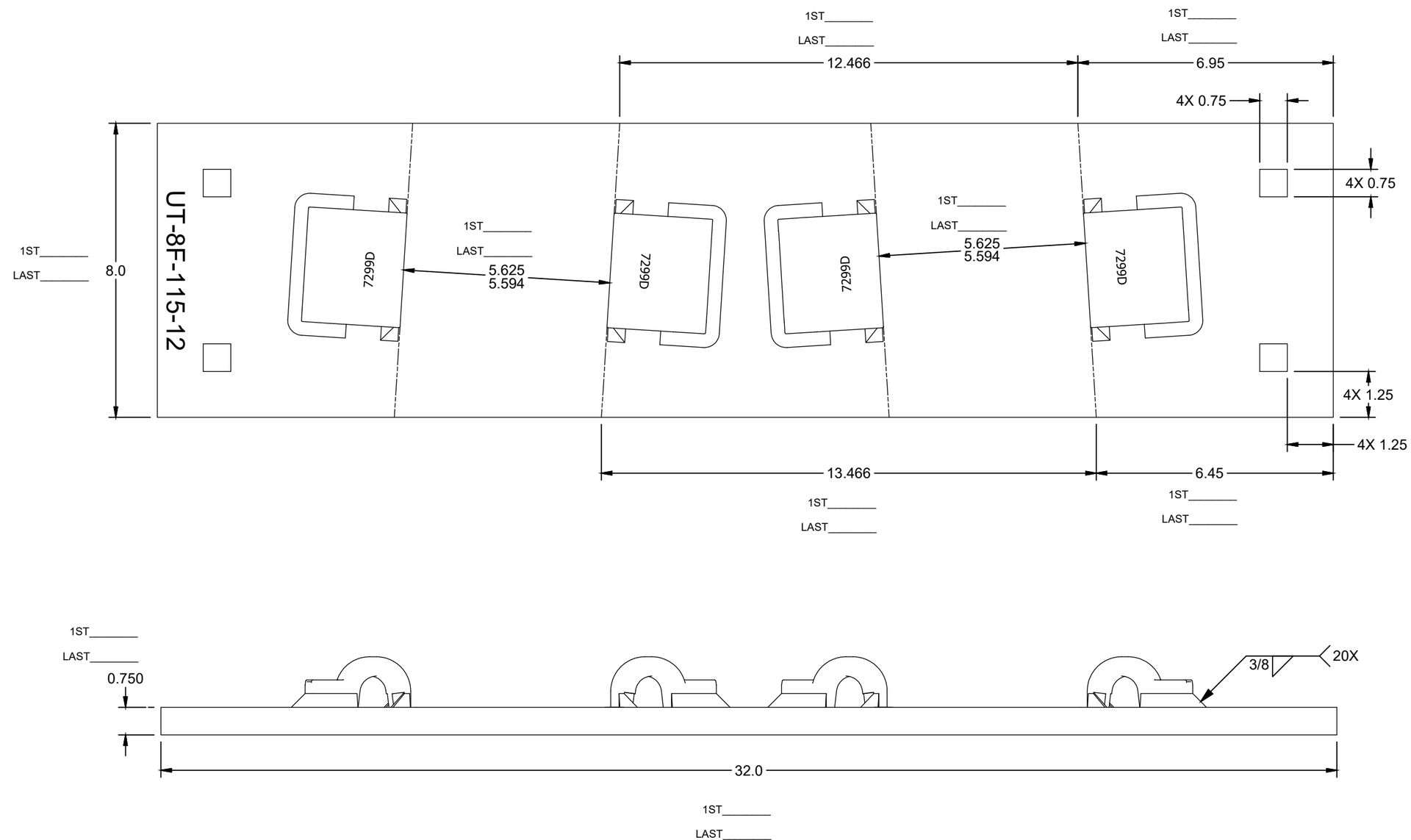

ASSEMBLY - BILL OF MATERIAL

ITEM	QTY	PART NUMBER	DESCRIPTION
1	1	RS075800A36	RAW STOCK_A36_0.750_8.000
2	4	PBN115REWS7299D	PBN_7299_DOMESTIC_FLAT
3	4	PN-PD-ECLIPD	E-CLIP_RH_DOMESTIC

UNLESS OTHERWISE SPECIFIED DIMENSIONS ARE IN INCHES

.X	.XX	.XXX	ANGLE
± .125	± .063	± .031	± 1/4°

C:\Unitrac\Plating-Frog\#08\FPA3771.idw

DRAWN	S.RAKESH	8/21/2019
CHECK	S.KENT	8/28/2019
SHEET	1 OF 1	SIZE B

UNITRAC RAILROAD MATERIALS, INC.
PO BOX 7098
KNOXVILLE, TN 37921

TITLE: PLATE FROG RBMI_115RE_08_12_PAN_FLAT_SQ_AREA 623 03_MOD-D_DOMESTIC

IN MAS	DRAWING NO.	REV
08/28/2019	FPA3771	

THE DOCUMENT AND THE DATA DISCLOSED HERE IN OR HERE WITH IS NOT TO BE REPRODUCED, USED, OR DISCLOSED IN WHOLE OR IN PART TO ANYONE WITHOUT THE PERMISSION OF UNITRAC RAILROAD MATERIALS INC.

SIGN OFF BLOCK

INITIALS AND DATE ALLOW PROCESS CONTINUATION

CHECK MATERIAL RECEIVED AGAINST PRINT

SAW CUT ENDS MUST BE CUT SQUARE WITHIN 1/16"

RECORD ACTUAL DIMENSIONS FOR 1ST AND LAST PART.

S.O. # _____

	INITIALS	DATE
SAW		
MILL		
STAMPING/ETCHING		
DRILLING		
WELDING		
ASSEMBLY		
PUNCHING		

COMMENTS _____

IF ANY DIMENSION DOES NOT MEET TOLERANCES ON THIS DRAWING STOP PROCESS AND NOTIFY SUPERVISOR

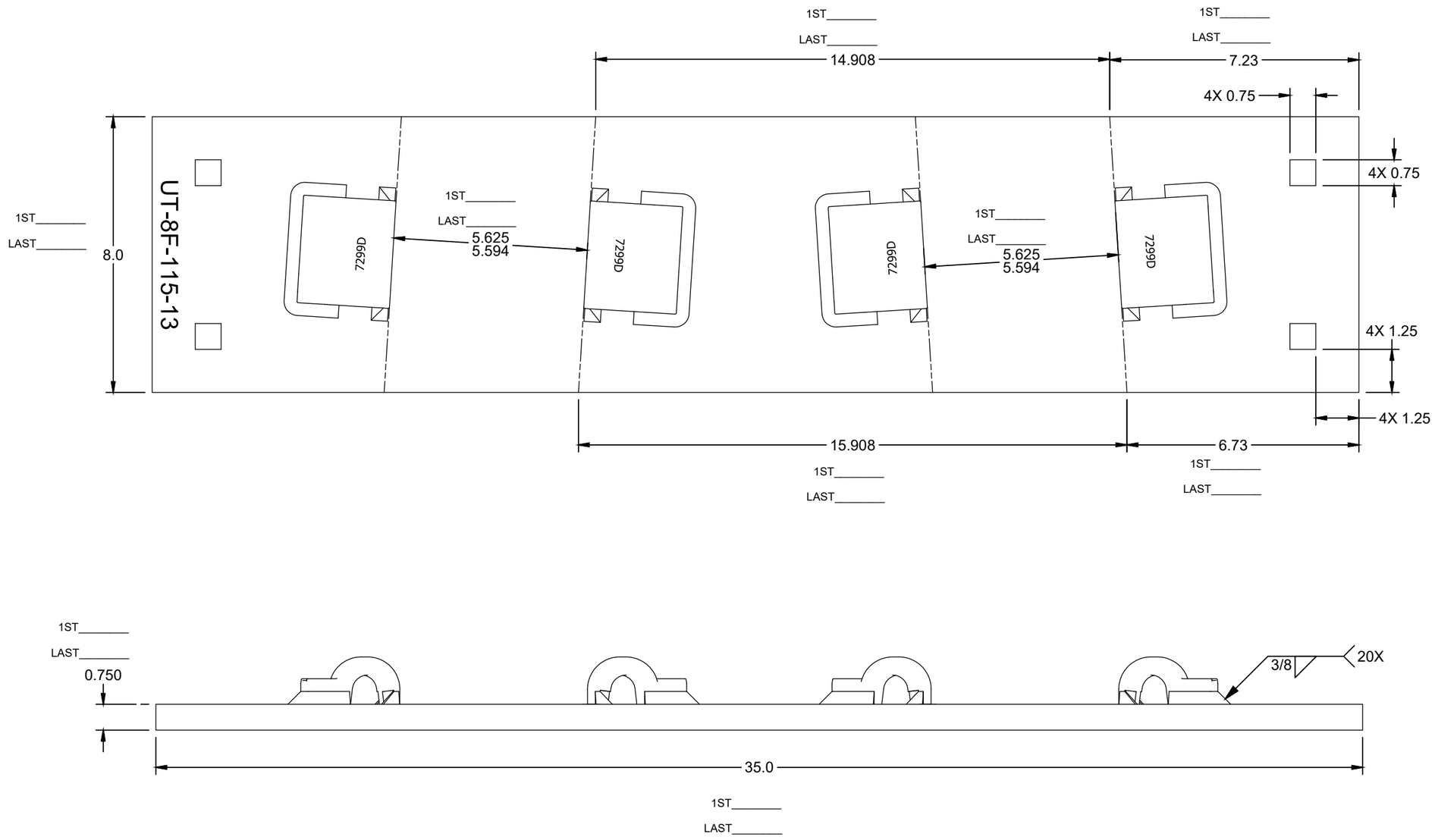

ASSEMBLY - BILL OF MATERIAL			
ITEM	QTY	PART NUMBER	DESCRIPTION
1	1	RS075800A36	RAW STOCK_A36_0.750_8.000
2	4	PBN115REWS7299D	PBN_7299_DOMESTIC_FLAT
3	4	PN-PD-ECLIPD	E-CLIP_RH_DOMESTIC

UNLESS OTHERWISE SPECIFIED DIMENSIONS ARE IN INCHES

.X	.XX	.XXX	ANGLE
± .125	± .063	± .031	± 1/4°

DRAWN	S.RAKESH	8/21/2019
CHECK	S.KENT	8/28/2019
SHEET 1 OF 1	SIZE B	

C:\Unitrac\Plating-Frog\#08\FPA3772.idw

UNITRAC RAILROAD MATERIALS, INC.

PO BOX 7098
KNOXVILLE, TN 37921

TITLE
PLATE FROG RBMI_115RE_08_13_PAN_FLAT_SQ_AREA 623 03_MOD-D_DOMESTIC

IN MAS	DRAWING NO.	REV
08/28/2019	FPA3772	

THE DOCUMENT AND THE DATA DISCLOSED HERE IN OR HERE WITH IS NOT TO BE REPRODUCED, USED, OR DISCLOSED IN WHOLE OR IN PART TO ANYONE WITHOUT THE PERMISSION OF UNITRAC RAILROAD MATERIALS.

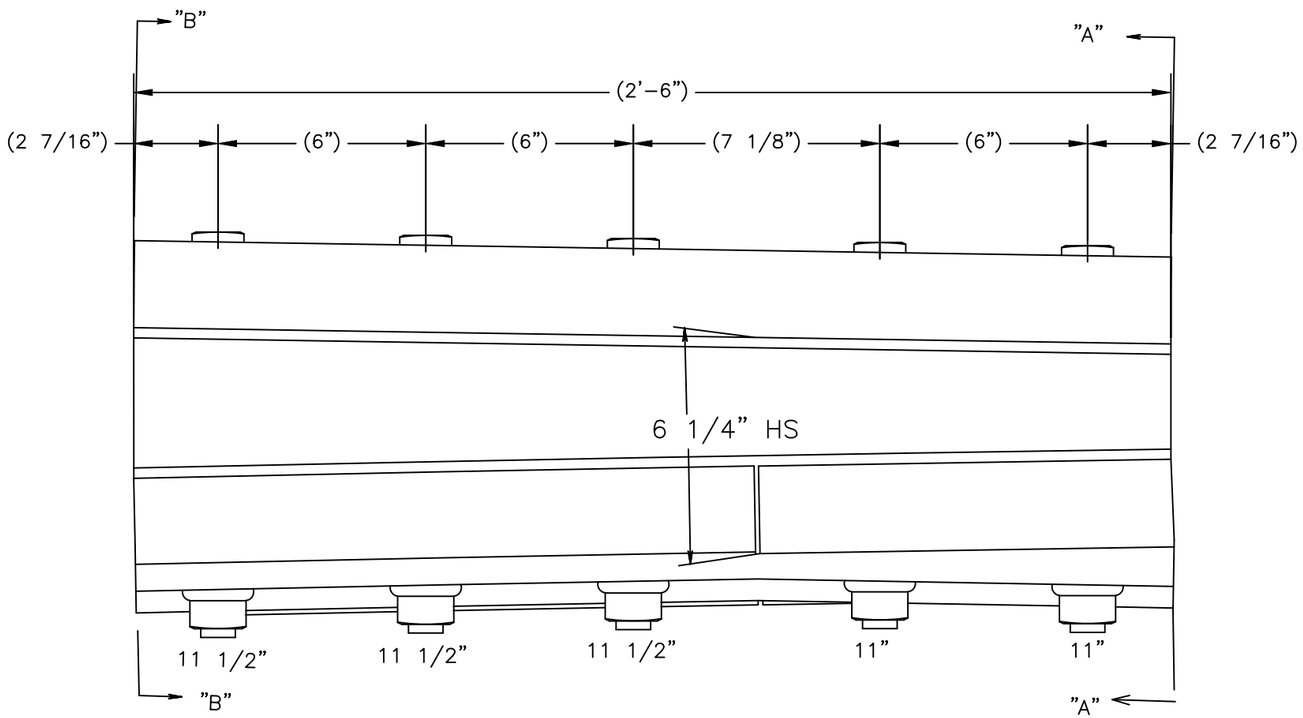

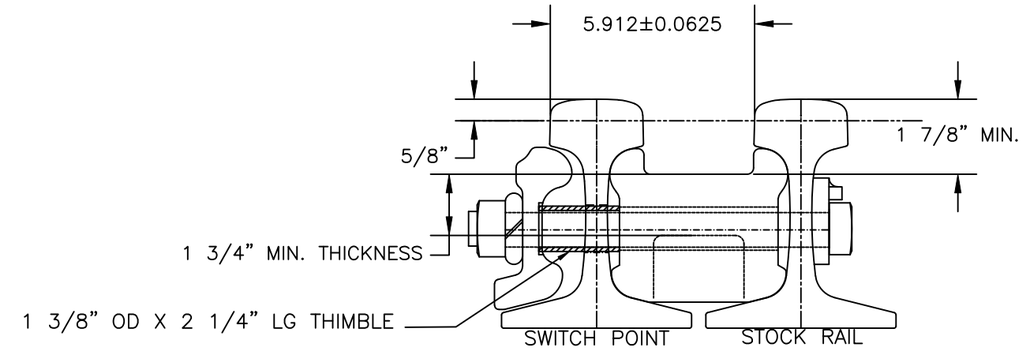

SECTION"A–A"

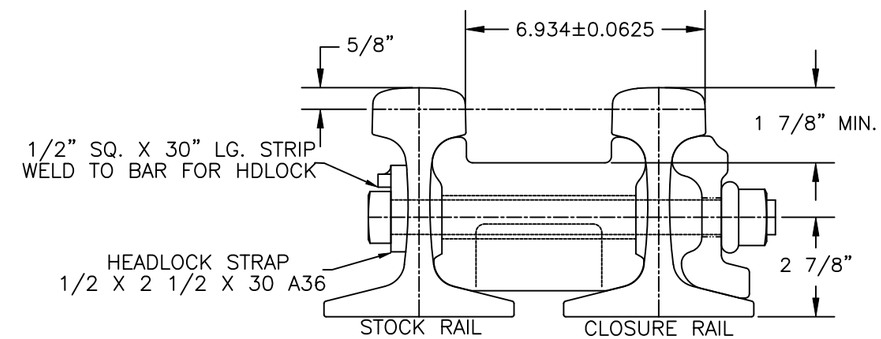

SECTION"B–B"

Parts List

ITEM	QTY	PART NUMBER	DESCRIPTION
1	1	HBB1033	HEEL BLOCK BAR_115RE_LH_5_16 6–19 6_AREA_DOMESTIC
2	1	HBC115RERAWD	HEEL BLOCK_115RE_NA_16 6_5_CAST_GRAD_AREA 112 03_DOMESTIC
3	1	HBN9000–11	HEEL BLOCK_THUMBLE_1.375
4	1	HBN–STRAPS	HEEL BLOCK STRAP_115/136RE_UNIV_5_AREA 112 03
5	5	LNP–DD	WASHER LOCK_1.000_.375
6	2	TB–G8SHP1100	BOLT SQ_1.000_11.000
7	3	TB–GPSHP1150	BOLT SQ_1.000_11.500

UNLESS OTHERWISE SPECIFIED DIMENSIONS ARE IN INCHES

.X	.XX	.XXX	ANGLE
± .125	± .063	± .031	± 1/4°

DRAWN	C.TAYLOR	6/19/2019
CHECK	S.KENT	6/19/2019
SHEET	1 OF 1	SIZE B

C:\UNITRAC\PURCHASED PARTS\CAST-SWITCH HEEL BLOCKS\HBNA1049

UNITRAC RAILROAD MATERIALS
PO BOX 7098
KNOXVILLE, TN 37921

TITLE: HEEL BLOCK ASSY_115RE_LH_16 6_5_CAST_GRAD_AREA 112_DOMESTIC

IN MAS	DRAWING NO.	REV
6/18/2019	HBNA1049	----

THE DOCUMENT AND THE DATA DISCLOSED HERE IN OR HERE WITH IS NOT TO BE REPRODUCED, USED, OR DISCLOSED IN WHOLE OR IN PART TO ANYONE WITHOUT THE PERMISSION OF UNITRAC RAILROAD MATERIALS.

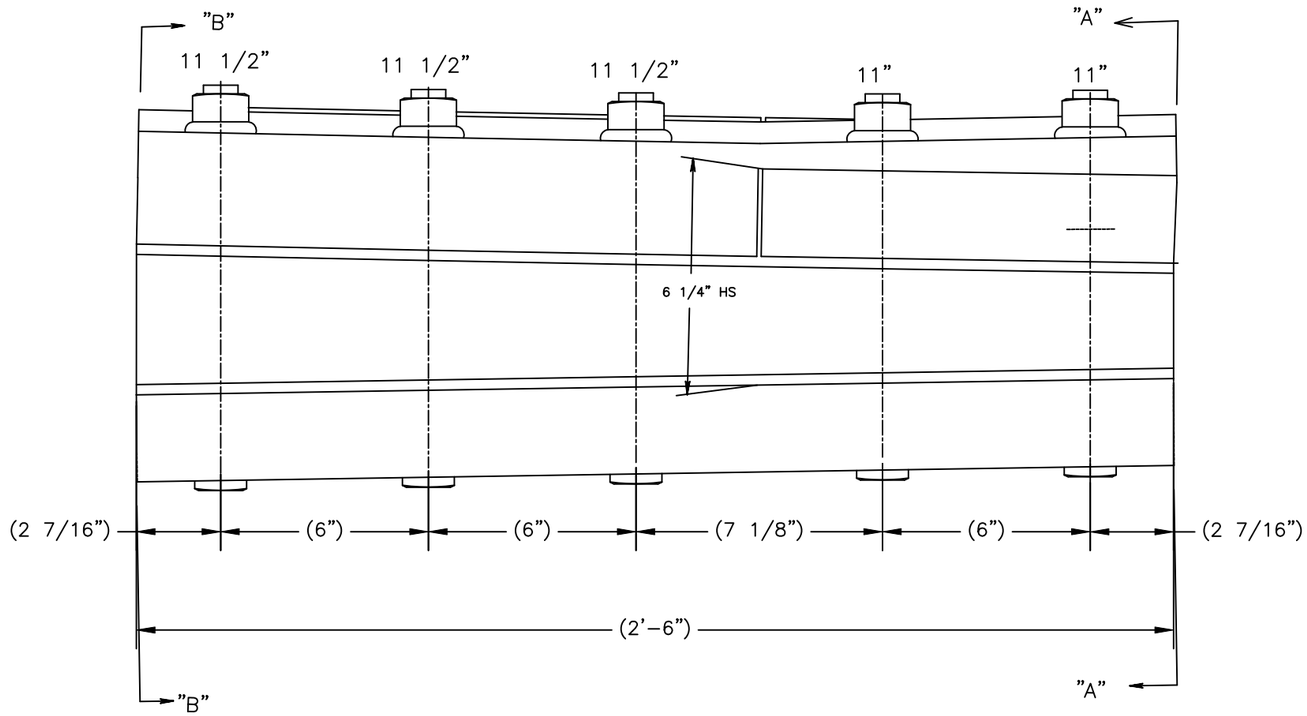

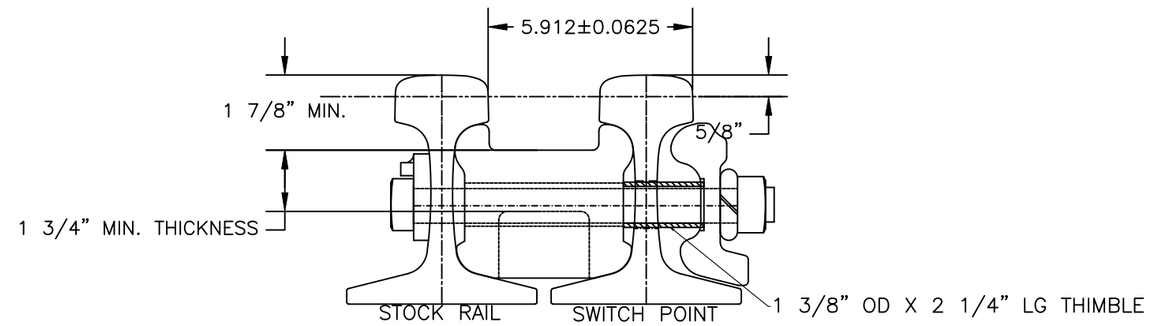

SECTION"A-A"

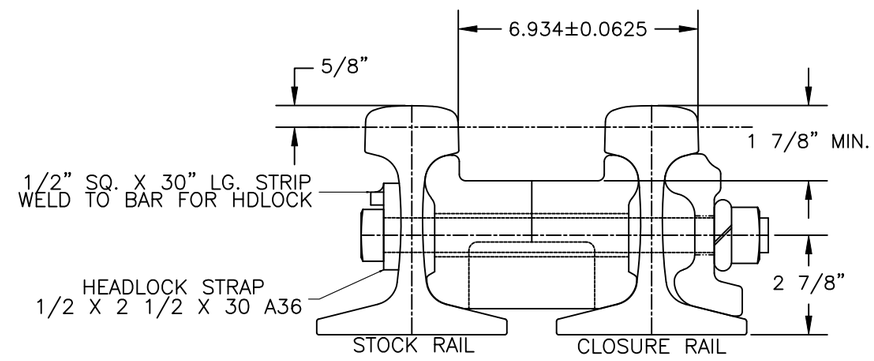

SECTION"B-B"

Parts List			
ITEM	QTY	PART NUMBER	DESCRIPTION
1	1	HBB1034	HEEL BLOCK BAR_115RE_RH_5_16 6-19 6_AREA_DOMESTIC
2	1	HBC115RERAWD	HEEL BLOCK_115RE_NA_16 6_5_CAST_GRAD_AREA 112 03_DOMESTIC
3	1	HBN9000-11	HEEL BLOCK_THUMBLE_1.375
4	1	HBN-STRAPS	HEEL BLOCK STRAP_115/136RE_UNIV_5_AREA 112 03
5	5	LNP-DD	WASHER LOCK_1.000_.375
6	2	TB-G8SHP1100	BOLT SQ_1.000_11.000
7	3	TB-GPSHP1150	BOLT SQ_1.000_11.500

UNLESS OTHERWISE SPECIFIED DIMENSIONS ARE IN INCHES

.X	.XX	.XXX	ANGLE
± .125	± .063	± .031	± 1/4°

DRAWN	C.TAYLOR	6/19/2019
CHECK	S.KENT	6/19/2019
SHEET 1 OF 1	SIZE B	

C:\UNITRAC\PURCHASED PARTS\CAST-SWITCH HEEL BLOCKS\HBNA1050

UNITRAC RAILROAD MATERIALS
PO BOX 7098
KNOXVILLE, TN 37921

TITLE: HEEL BLOCK ASSY_115RE_RH_16 6_5_CAST_GRAD_AREA 112_DOMESTIC

IN MAS	DRAWING NO.	REV
6/18/2019	HBNA1050	----

THE DOCUMENT AND THE DATA DISCLOSED HERE IN OR HERE WITH IS NOT TO BE REPRODUCED, USED, OR DISCLOSED IN WHOLE OR IN PART TO ANYONE WITHOUT THE PERMISSION OF UNITRAC RAILROAD MATERIALS.

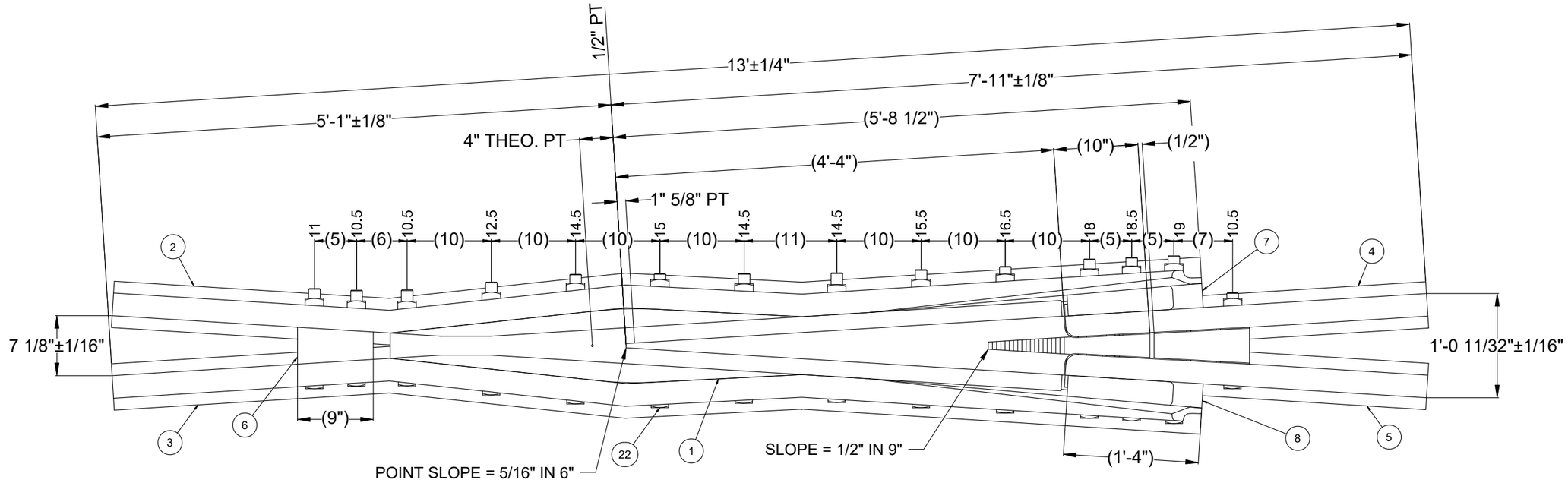

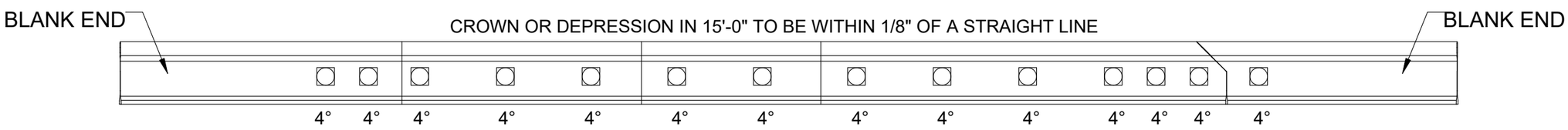

Parts List

ITEM	QTY	PART NUMBER	DESCRIPTION
1	1	FCM11508A00	FROG RBMI_MACH_115RE_08_EDH_A_90_.625_AREA STD_AREA 622 09
2	1	RW1403	RAIL WING_115RE_10 9.313_LH_08_90_HH_AREA 622 03_BLANK END
3	1	RW1404	RAIL WING_115RE_10 9.313_RH_08_90_HH_AREA 622 03_BLANK END
4	1	RH1405	RAIL HEEL_115RE_3 6.875_LH_08_90_HH_AREA 622 03_BLANK END
5	1	RH1406	RAIL HEEL_115RE_3 6.875_RH_08_90_HH_AREA 622 03_BLANK END
6	1	FTB11508	TOE BLOCK RBMI_115RE_CAST_08_9.000_2_AREA 622 03_DOMESTIC
7	1	FFC115RELH	FILLER RBMI_115RE_LH_90_CAST_STR_6-12_16_AREA_DOMESTIC
8	1	FFC115RERH	FILLER RBMI_115RE_RH_90_CAST_STR_6-12_16_AREA_DOMESTIC
9	3	TB-G8SHV1050LB	BOLT SQ_1.375_10.500_GRADE 8
10	1	TB-G8SHV1100LB	BOLT SQ_1.375_11.000_GRADE 8
11	1	TB-G8SHV1250LB	BOLT SQ_1.375_12.500_GRADE 8
12	3	TB-G8SHV1450LB	BOLT SQ_1.375_14.500_GRADE 8
13	1	TB-G8SHV1500LB	BOLT SQ_1.375_15.000_GRADE 8
14	1	TB-G8SHV1550LB	BOLT SQ_1.375_15.500_GRADE 8
15	1	TB-G8SHV1650LB	BOLT SQ_1.375_16.500_GRADE 8
16	1	TB-G8SHV1800LB	BOLT SQ_1.375_18.000_GRADE 8
17	1	TB-G8SHV1850LB	BOLT SQ_1.375_18.500_GRADE 8
18	1	TB-G8SHV1900LB	BOLT SQ_1.375_19.000_GRADE 8
19	14	LN-115CO7-1051	BEVEL WASHER_115_4DEG
20	14	LN-115CO7-1050	WASHER HEAD LOCK_115_4DEG
21	14	LNV-AREA	WASHER LOCK_1.438_2.500_0.500
22	1	FNIDTAG	ID TAG_FROG

NOTES:

1. CUT HEEL EXTENSION OFF AT 10"
2. MANGANESE CASTING TO BE EDH
3. FRACTIONAL TOLERANCES NOT GIVEN ARE ±1/32"
4. TOLERANCES NOT SUPPLIED ARE PER AREMA 1021-03 OR LATEST REVISION

UNLESS OTHERWISE SPECIFIED DIMENSIONS ARE IN INCHES				DRAWN S.KENT	2/7/2020
				CHECK C.TAYLOR	2/10/2020
.X ± .125	.XX ± .063	.XXX ± .031	ANGLE ± 1/4°	SHEET 1 OF 4	SIZE B

C:\UNITRAC\FROGS\#08\FNRB11508A012E

UNITRAC RAILROAD MATERIALS
PO BOX 7098
KNOXVILLE, TN 37921

TITLE
FROG RBMI_115RE_08_13_HH_EDH_A_90_.625_AREA STD_AREA 622 03_BLANK ENDS

IN MAS	DRAWING NO.	REV
2/10/2020	FNRB11508A012E	----

THE DOCUMENT AND THE DATA DISCLOSED HERE IN OR HERE WITH IS NOT TO BE REPRODUCED, USED, OR DISCLOSED IN WHOLE OR IN PART TO ANYONE WITHOUT THE PERMISSION OF UNITRAC RAILROAD MATERIALS INC.

REVISION HISTORY

REV	DATE	REV AUTHOR	CHECKED DATE	CHECKED BY	ECR#	CHANGE NOTE
C	11/17/2017	J.RHYNE	11/17/2017	S.KENT	1276	SIDE BEND DIMENSION 84 15/16 WAS 83 27/32

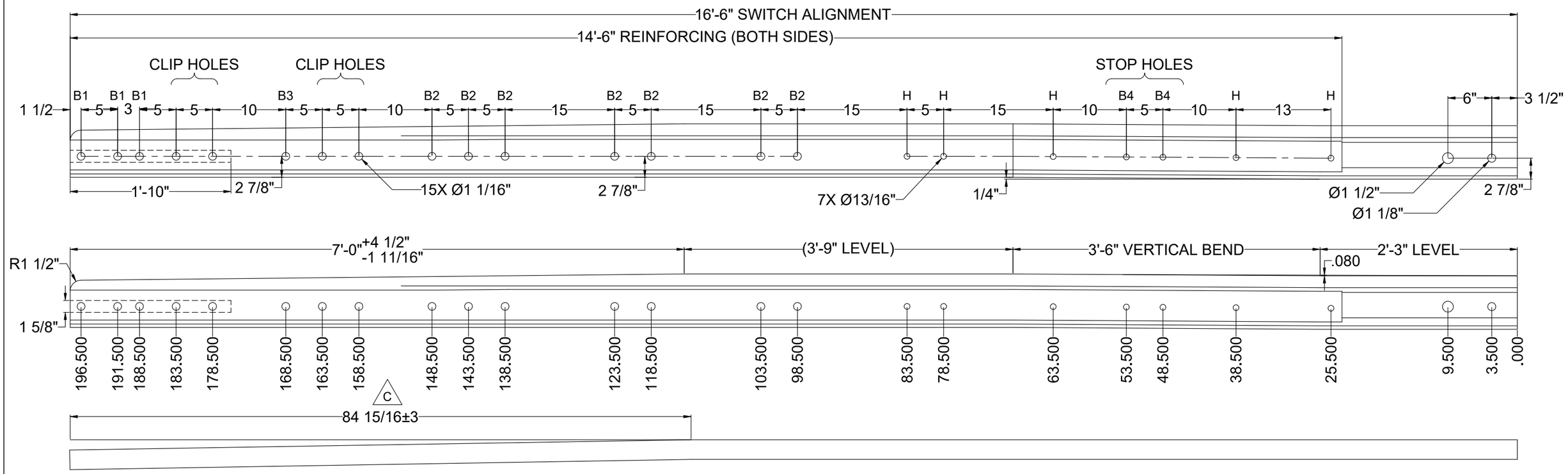

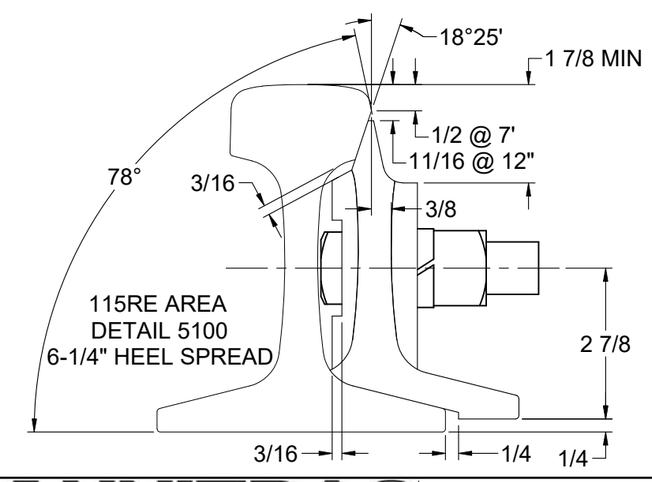

Parts List

ITEM	QTY	PART NUMBER	DESCRIPTION	LOCATION
1	1	RN115REHH	RAIL NEW_115RE_HH	
2	2	SPPN-R115RE0500	SWITCH POINT_REINF_115RE_.500	
3	3	TB-G8THP0350	BOLT THIN_1.000_3.500	B1
4	7	TB-G8SHP0375	BOLT SQ_1.000_3.750	B2
5	1	TB-G8THP0375	BOLT THIN_1.000_3.750	B3
6	2	TB-G8SHK0425	BOLT SQ_.750_4.250	B4
7	5	TB-HUCKPINSP	BOLT HUCK_.750_1.500-1.750	H
8	11	LNP-AREA	WASHER LOCK_1.000_.500	
9	2	LNK-AREA	WASHER LOCK_.750_.500	
10	5	TB-HUCKCOLL	NUT HUCK_.750	
11	1	SPPN-IDTAGS	ID TAG_SWITCH POINT	
12	1	SPPN-SPSTOPS	SWITCH POINT STOP_3.375_2.500	

NOTES:
1. TOLERANCE PER AREMA PLAN #1020-03

UNLESS OTHERWISE SPECIFIED DIMENSIONS ARE IN INCHES

.X	.XX	.XXX	ANGLE
± .125	± .063	± .031	± 1/4°

DRAWN J.REED 1/29/2010
CHECK M.ROBERTS 2/1/2010
SHEET 1 OF 1
SIZE B

C:\UNITRAC\SWITCH POINTS\AREMA\SPN15HHS1660GSL

UNITRAC RAILROAD MATERIALS, INC.
PO BOX 7098
KNOXVILLE, TN 37921

TITLE
RAIL SP_115RE_16 6_16 6_HH_SL_SAM_GRAD_AREA 112 03

IN MAS	DRAWING NO.	REV
1/28/2013	SPN15HHS1660GSL	C

THE DOCUMENT AND THE DATA DISCLOSED HERE IN OR HERE WITH IS NOT TO BE REPRODUCED, USED, OR DISCLOSED IN WHOLE OR IN PART TO ANYONE WITHOUT THE PERMISSION OF UNITRAC RAILROAD MATERIALS INC.

REVISION HISTORY

REV	DATE	REV AUTHOR	CHECKED DATE	CHECKED BY	ECR#	CHANGE NOTE
C	11/17/2017	J.RHYNE	11/17/2017	S.KENT	1276	SIDE BEND DIMENSION 84 15/16 WAS 83 27/32

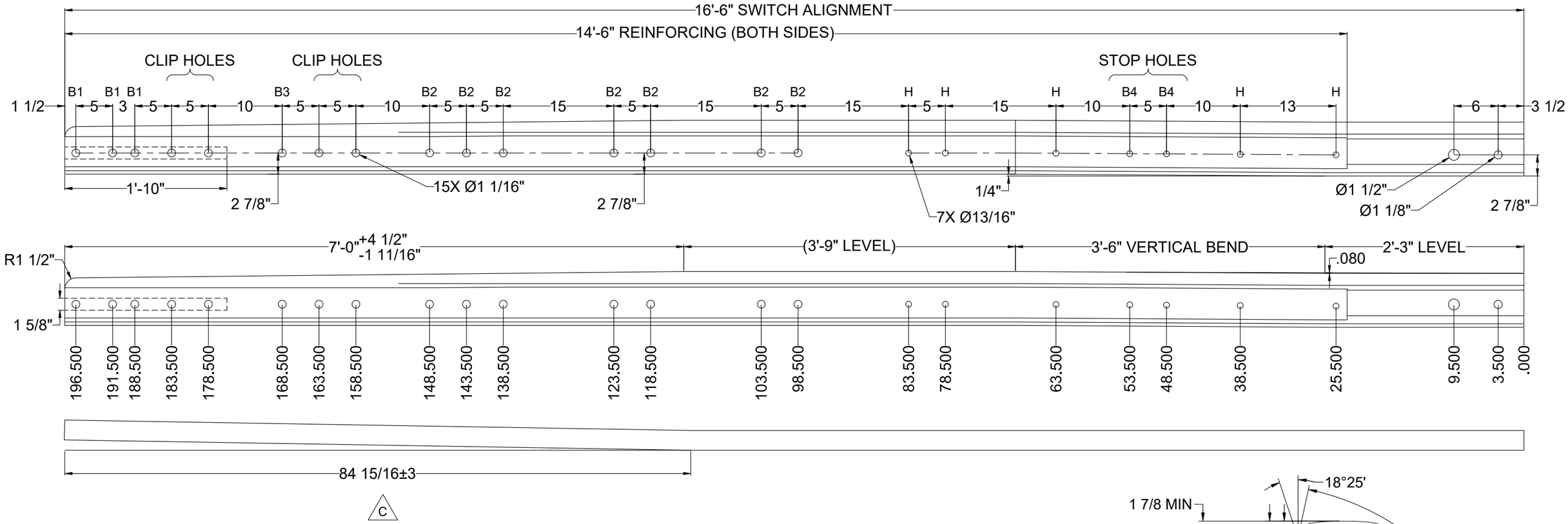

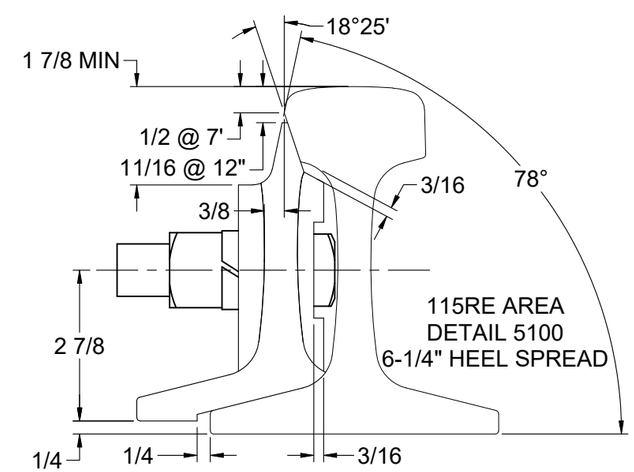

Parts List

ITEM	QTY	PART NUMBER	DESCRIPTION	LOCATION
1	1	RN115REHH	RAIL NEW_115RE_HH	
2	2	SPPN-R115RE0500	SWITCH POINT_REINF_115RE_.500	
3	3	TB-G8THP0350	BOLT THIN_1.000_3.500	B1
4	7	TB-G8SHP0375	BOLT SQ_1.000_3.750	B2
5	1	TB-G8THP0375	BOLT THIN_1.000_3.750	B3
6	2	TB-G8SHK0425	BOLT SQ_.750_4.250	B4
7	5	TB-HUCKPINSP	BOLT HUCK_.750_1.500-1.750	H
8	11	LNP-AREA	WASHER LOCK_1.000_.500	
9	2	LNK-AREA	WASHER LOCK_.750_.500	
10	5	TB-HUCKCOLL	NUT HUCK_.750	
11	1	SPPN-IDTAGS	ID TAG_SWITCH POINT	
12	1	SPPN-SPSTOPS	SWITCH POINT STOP_3.375_2.500	

NOTES:
1. TOLERANCE PER AREMA PLAN #1020-03

UNLESS OTHERWISE SPECIFIED DIMENSIONS ARE IN INCHES

.X	.XX	.XXX	ANGLE
± .125	± .063	± .031	± 1/4°

DRAWN J.REED 1/29/2010
CHECK M.ROBERTS 2/1/2010
SHEET 1 OF 1
SIZE B

C:\UNITRAC\SWITCH POINTS\AREMA\SPN15HHS1660GSR

UNITRAC RAILROAD MATERIALS, INC.
PO BOX 7098
KNOXVILLE, TN 37921

TITLE
RAIL SP_115RE_16 6_16 6_HH_SR_SAM_GRAD_AREA 112 03

IN MAS 1/28/2013
DRAWING NO. SPN15HHS1660GSR
REV C

THE DOCUMENT AND THE DATA DISCLOSED HERE IN OR HERE WITH IS NOT TO BE REPRODUCED, USED, OR DISCLOSED IN WHOLE OR IN PART TO ANYONE WITHOUT THE PERMISSION OF UNITRAC RAILROAD MATERIALS INC.

BENT LEFT

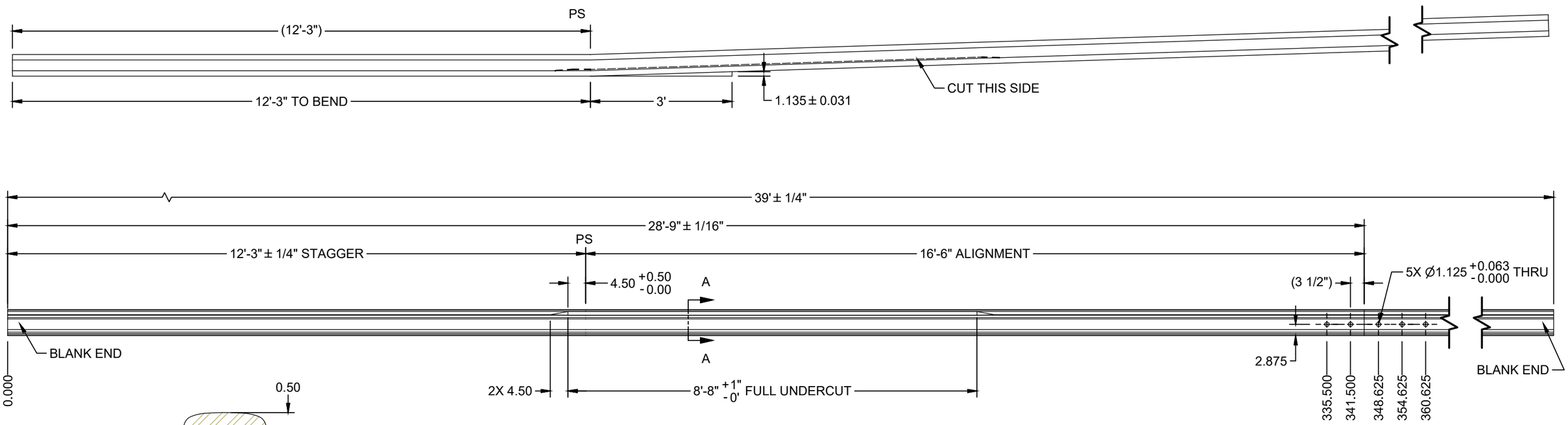

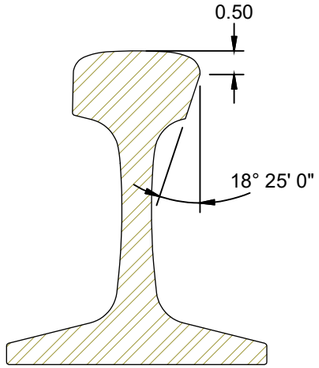

SECTION A-A

NOTES:
1. MAKE CUTS OPPOSITE RAIL BRAND
2. ALL FRACTIONAL TOLERANCES NOT LISTED ARE ±1/32

UNLESS OTHERWISE SPECIFIED DIMENSIONS ARE IN INCHES				DRAWN S.KENT	2/14/2020
				CHECK C.TAYLOR	2/17/2020
.X ± .125	.XX ± .063	.XXX ± .031	ANGLE ± 1/4°	SHEET 1 OF 1	SIZE B

C:\Unitrac\Stock Rails\AREMA\SRN1910.idw

UNITRAC RAILROAD MATERIALS, INC.
PO BOX 7098
KNOXVILLE, TN 37921

TITLE
RAIL STOCK_115RE_16 6_39_HH_BL_SAM_GRAD_AREA 112 03_BLANK ENDS

IN MAS	DRAWING NO.	REV
2/17/2020	SRN1910	

ASSEMBLY - BILL OF MATERIAL

ITEM	QTY	PART NUMBER	DESCRIPTION
1	1	RN115REHH	RAIL NEW_115RE_HH
2	1	SRN-IDTAGS	ID TAG_STOCK RAIL

THE DOCUMENT AND THE DATA DISCLOSED HERE IN OR HERE WITH IS NOT TO BE REPRODUCED, USED, OR DISCLOSED IN WHOLE OR IN PART TO ANYONE WITHOUT THE PERMISSION OF UNITRAC RAILROAD MATERIALS INC.

STRAIGHT RIGHT

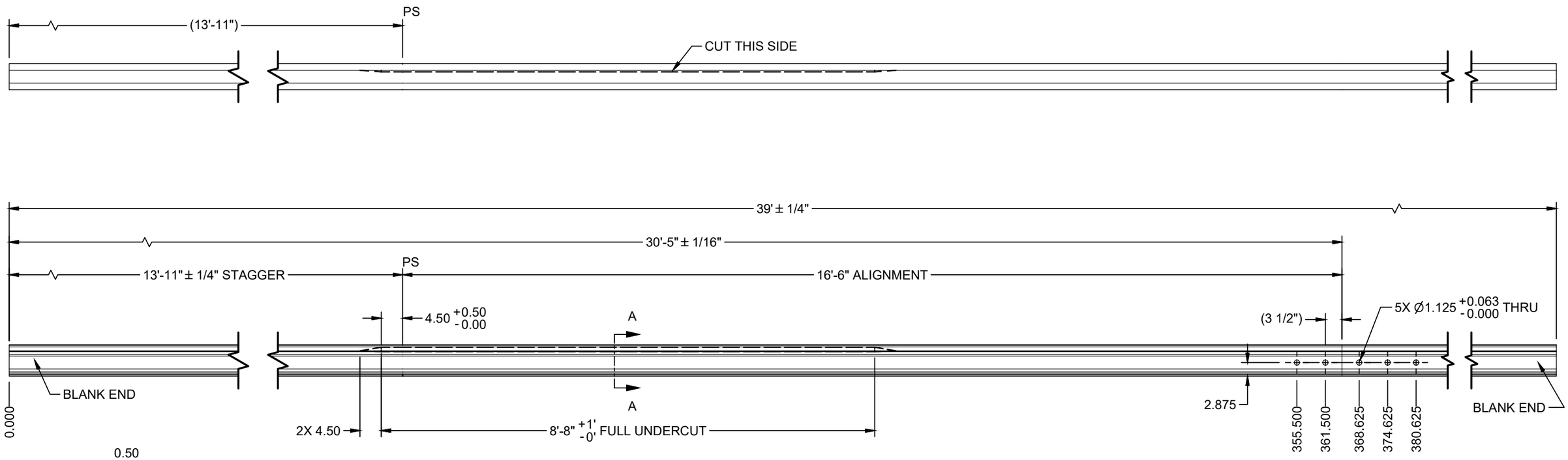

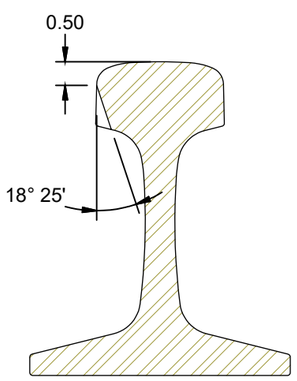

SECTION A-A

NOTES:
1. MAKE CUTS OPPOSITE RAIL BRAND
2. ALL FRACTIONAL TOLERANCES NOT LISTED ARE ±1/32

ASSEMBLY - BILL OF MATERIAL			
ITEM	QTY	PART NUMBER	DESCRIPTION
1	1	RN115REHH	RAIL NEW_115RE_HH
2	1	SRN-IDTAGS	ID TAG_STOCK RAIL

UNLESS OTHERWISE SPECIFIED DIMENSIONS ARE IN INCHES				DRAWN S.KENT	2/14/2020
				CHECK C.TAYLOR	2/17/2020
.X ± .125	.XX ± .063	.XXX ± .031	ANGLE ± 1/4°	SHEET 1 OF 1	SIZE B

C:\Unitrac\Stock Rails\AREMA\SRN1911.idw

UNITRAC RAILROAD MATERIALS, INC.
PO BOX 7098
KNOXVILLE, TN 37921

TITLE
RAIL STOCK_115RE_16 6_39_HH_SR_SAM_GRAD_AREA 112 03_BLANK ENDS

IN MAS	DRAWING NO.	REV
2/17/2020	SRN1911	

THE DOCUMENT AND THE DATA DISCLOSED HERE IN OR HERE WITH IS NOT TO BE REPRODUCED, USED, OR DISCLOSED IN WHOLE OR IN PART TO ANYONE WITHOUT THE PERMISSION OF UNITRAC RAILROAD MATERIALS.

SIGN OFF BLOCK

INITIALS AND DATE ALLOW PROCESS CONTINUATION

CHECK MATERIAL RECEIVED AGAINST PRINT

SAW CUT ENDS MUST BE CUT SQUARE WITHIN 1/16"

RECORD ACTUAL DIMENSIONS FOR 1ST AND LAST PART.

S.O. # _____

	INITIALS	DATE
SAW		
MILL		
STAMPING/ETCHING		
DRILLING		
WELDING		
ASSEMBLY		
PUNCHING		

COMMENTS _____

IF ANY DIMENSION DOES NOT MEET TOLERANCES ON THIS DRAWING STOP PROCESS AND NOTIFY SUPERVISOR

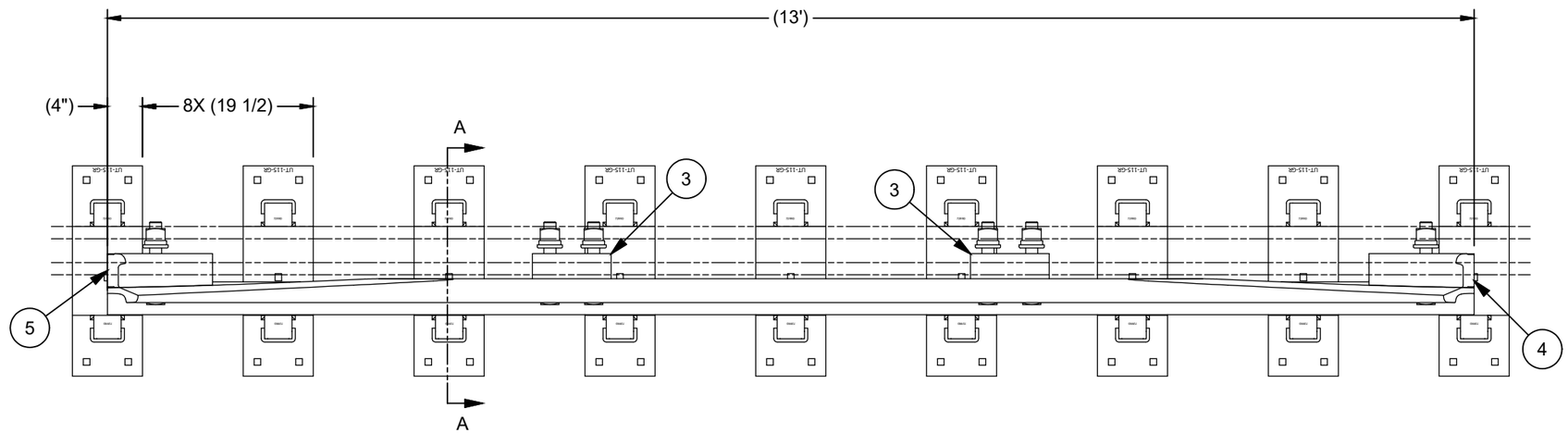

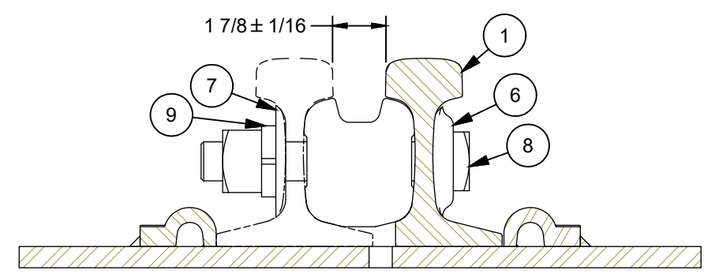

SECTION A-A

ASSEMBLY - BILL OF MATERIAL

ITEM	QTY	PART NUMBER	DESCRIPTION
1	1	GR9002-HH	GUARD RAIL_115RE_504_13_HH_STR_AREA 504 03
2	9	GRPN115AP504S	PLATE GUARD ASSY_115RE_504_STR_PAN_FLAT_SQ_AREA 504 03_DOMESTIC
3	2	GRSB115RE	SEPERATOR BLOCK CAST_GUARDRAIL_115RE_1.875_UNIV_9.000_NA_AREA 504 03
4	1	GRFB115RELH	SEPERATOR BLOCK CAST_GUARD RAIL_115RE_1.875_LH_12.000_NA_AREA 504 03
5	1	GRFB115RERH	SEPERATOR BLOCK CAST_GUARD RAIL_115RE_1.875_RH_12.000_NA_AREA 504 03
6	6	LN-115CO7-1054	HEAD LOCK_115RE_0DEG
7	6	LN-115CO7-1055	BEVEL WASHER_115RE_0DEG
8	6	TB-G8SHV0850LB	BOLT SQ_1.375_8.500_GRADE 8
9	6	LNV-AREA	WASHER LOCK_1.375_1.438_2.500_0.500

UNLESS OTHERWISE SPECIFIED DIMENSIONS ARE IN INCHES

.X	.XX	.XXX	ANGLE
± .125	± .063	± .031	± 1/4°

DRAWN	C.TAYLOR	8/29/2019
CHECK	S.KENT	9/12/2019
SHEET	1 OF 1	SIZE B

C:\Unitrac\504 Guardrail\13'\GRNA1214.idw

UNITRAC RAILROAD MATERIALS
PO BOX 7098
KNOXVILLE, TN 37921

TITLE
GUARD RAIL ASSY_115RE_504_13_STR_PAN_SQ_HH_AREA 504 03_DOMESTIC

IN MAS	DRAWING NO.	REV
9/12/2019	GRNA1214	

THE DOCUMENT AND THE DATA DISCLOSED HERE IN OR HERE WITH IS NOT TO BE REPRODUCED, USED, OR DISCLOSED IN WHOLE OR IN PART TO ANYONE WITHOUT THE PERMISSION OF UNITRAC RAILROAD MATERIALS.

SIGN OFF BLOCK

INITIALS AND DATE ALLOW PROCESS CONTINUATION

CHECK MATERIAL RECEIVED AGAINST PRINT

SAW CUT ENDS MUST BE CUT SQUARE WITHIN 1/16"

RECORD ACTUAL DIMENSIONS FOR 1ST AND LAST PART.

S.O. # _____

	INITIALS	DATE
SAW		
MILL		
STAMPING/ETCHING		
DRILLING		
WELDING		
ASSEMBLY		
PUNCHING		

COMMENTS _____

IF ANY DIMENSION DOES NOT MEET TOLERANCES ON THIS DRAWING STOP PROCESS AND NOTIFY SUPERVISOR

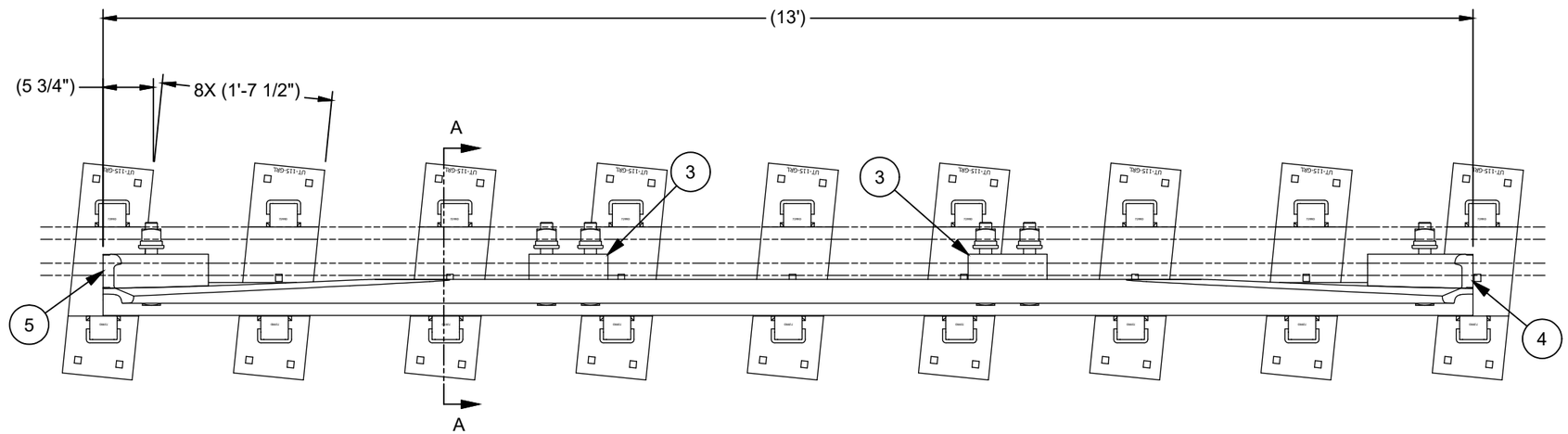

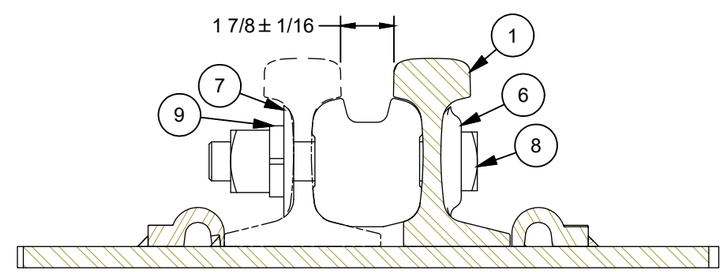

SECTION A-A

ASSEMBLY - BILL OF MATERIAL

ITEM	QTY	PART NUMBER	DESCRIPTION
1	1	GR9002-HH	GUARD RAIL_115RE_504_13_HH_STR_AREA 504 03
2	9	GRPN115AP504AL	PLATE GUARD ASSY_115RE_504_LH_PAN_FLAT_SQ_AREA 504 03_DOMESTIC
3	2	GRSB115RE	SEPERATOR BLOCK CAST_GUARDRAIL_115RE_1.875_UNIV_9.000_NA_AREA 504 03
4	1	GRFB115RELH	SEPERATOR BLOCK CAST_GUARD RAIL_115RE_1.875_LH_12.000_NA_AREA 504 03
5	1	GRFB115RERH	SEPERATOR BLOCK CAST_GUARD RAIL_115RE_1.875_RH_12.000_NA_AREA 504 03
6	6	LN-115CO7-1054	HEAD LOCK_115RE_0DEG
7	6	LN-115CO7-1055	BEVEL WASHER_115RE_0DEG
8	6	TB-G8SHV0850LB	BOLT SQ_1.375_8.500_GRADE 8
9	6	LNV-AREA	WASHER LOCK_1.375_1.438_2.500_0.500

UNLESS OTHERWISE SPECIFIED DIMENSIONS ARE IN INCHES

.X	.XX	.XXX	ANGLE
± .125	± .063	± .031	± 1/4°

C:\Unitrac\504 Guardrail\13'\GRNA1215.idw

DRAWN	C.TAYLOR	9/13/2019
CHECK	S.KENT	9/13/2019
SHEET 1 OF 1	SIZE B	

UNITRAC RAILROAD MATERIALS
PO BOX 7098
KNOXVILLE, TN 37921

TITLE
GUARD RAIL ASSY_115RE_504_13_LH_PAN_SQ_HH_AREA 504 03_DOMESTIC

IN MAS	DRAWING NO.	REV
9/13/2019	GRNA1215	

THE DOCUMENT AND THE DATA DISCLOSED HERE IN OR HERE WITH IS NOT TO BE REPRODUCED, USED, OR DISCLOSED IN WHOLE OR IN PART TO ANYONE WITHOUT THE PERMISSION OF UNITRAC RAILROAD MATERIALS INC.

SIGN OFF BLOCK

INITIALS AND DATE ALLOW PROCESS CONTINUATION

CHECK MATERIAL RECEIVED AGAINST PRINT

SAW CUT ENDS MUST BE CUT SQUARE WITHIN 1/16"

RECORD ACTUAL DIMENSIONS FOR 1ST AND LAST PART.

S.O. # _____

	INITIALS	DATE
SAW		
MILL		
STAMPING/ETCHING		
DRILLING		
WELDING		
ASSEMBLY		
PUNCHING		

COMMENTS _____

IF ANY DIMENSION DOES NOT MEET TOLERANCES ON THIS DRAWING STOP PROCESS AND NOTIFY SUPERVISOR

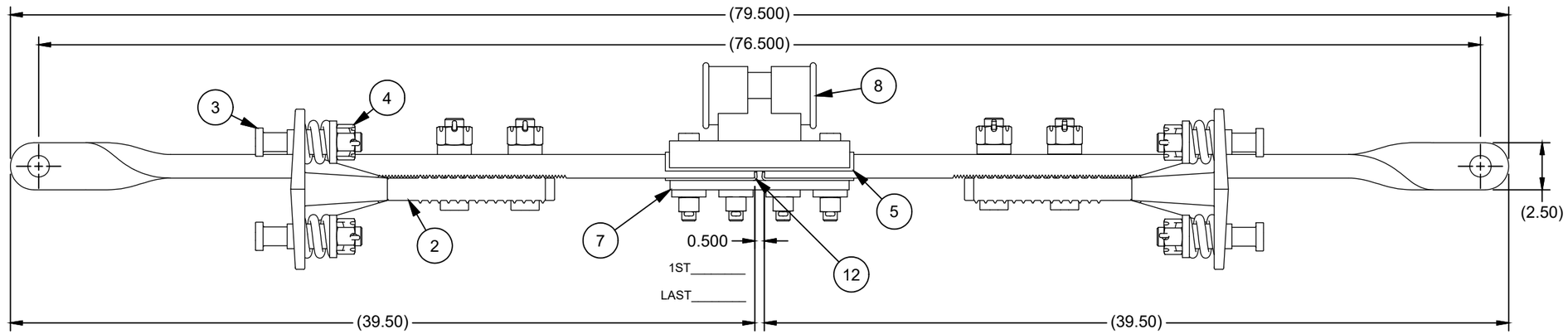

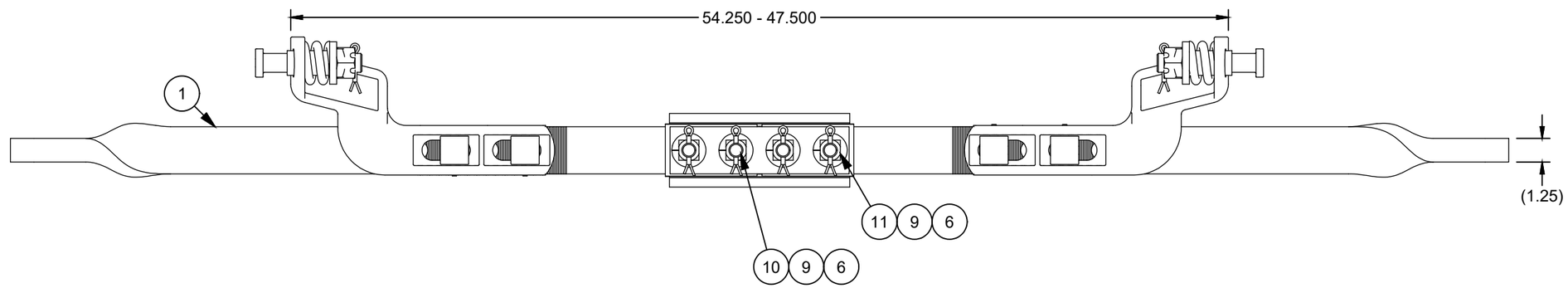

CONTINUITY TESTING:
NO LESS THAN 10 MegOhm at 500 VOLTS

1ST_____

LAST_____

VERIFY PRESENCE OF THIMBLE AS INDICATED

VERIFIED BY: _____

DATE: _____

ASSEMBLY - BILL OF MATERIAL

ITEM	QTY	PART NUMBER	DESCRIPTION
1	2	ROD1132	ROD MILLED_1.250_2.500_39.500_TWISTED
2	2	SPPN-RCBNSF278A	ROCKER CLIP ASSY_BNSF 241602-AREA 222 08_CLIP AB 2 7/8
3	4	TB-G8THP0525	BOLT THIN_1.000_5.250
4	4	TB-PCASTLE	NUT CASTLE_1.00
5	1	SPPN-CRICHANNEL	SWITCH ROD_INS CHANNEL_CR 73518 G
6	4	SPPN-INSBUSH125	SWITCH ROD_INS BUSHING_1.000_1.469
7	1	SPPN-SPLICEPLTE	SWITCH ROD_SPLICE PLATE_.500_2.500_9.500
8	1	SPPN-SWRODBNSF	SWITCH ROD_BASKET_BNSF/CS/UP 241601
9	4	LNK-DD	WASHER LOCK_.750_.375
10	2	TB-G8SHK0425	BOLT SQ_.750_4.250
11	2	TB-G8THK0425	BOLT THIN_.750_4.250
12	2	GN-INSPLATEBNSF	FIBER CHANNEL_INS PLATE_.125_2.500_4.875

UNLESS OTHERWISE SPECIFIED DIMENSIONS ARE IN INCHES

.X	.XX	.XXX	ANGLE
± .125	± .063	± .031	± 1/4°

DRAWN	J.RHYNE	5/17/2017
CHECK	H.BLADE	5/24/2017
SHEET	1 OF 1	SIZE B

C:\Unitrac\Switch Rods Insulated\#1 Rod\SWR1072.idw

UNITRAC RAILROAD MATERIALS, INC.

PO BOX 7098
KNOXVILLE, TN 37921

TITLE
SWITCH ROD_1_INS_1.250_ROCKER_AREA 222 08_BASKET_CLIP AB 2 7/8

IN MAS	DRAWING NO.	REV
5/24/2017	SWR1072	

THE DOCUMENT AND THE DATA DISCLOSED HERE IN OR HERE WITH IS NOT TO BE REPRODUCED, USED, OR DISCLOSED IN WHOLE OR IN PART TO ANYONE WITHOUT THE PERMISSION OF UNITRAC RAILROAD MATERIALS INC.

SIGN OFF BLOCK

INITIALS AND DATE ALLOW PROCESS CONTINUATION

CHECK MATERIAL RECEIVED AGAINST PRINT

SAW CUT ENDS MUST BE CUT SQUARE WITHIN 1/16"

RECORD ACTUAL DIMENSIONS FOR 1ST AND LAST PART.

S.O. # _____

	INITIALS	DATE
SAW		
MILL		
STAMPING/ETCHING		
DRILLING		
WELDING		
ASSEMBLY		
PUNCHING		

COMMENTS _____

IF ANY DIMENSION DOES NOT MEET TOLERANCES ON THIS DRAWING STOP PROCESS AND NOTIFY SUPERVISOR

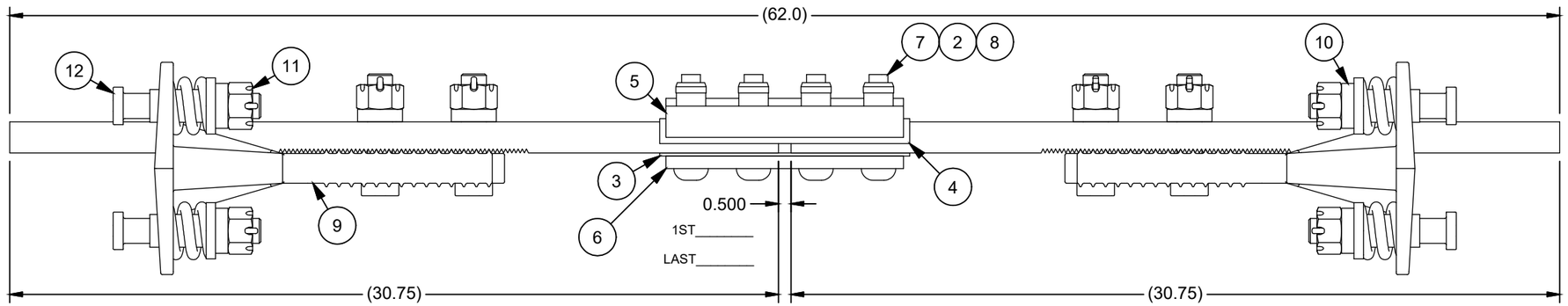

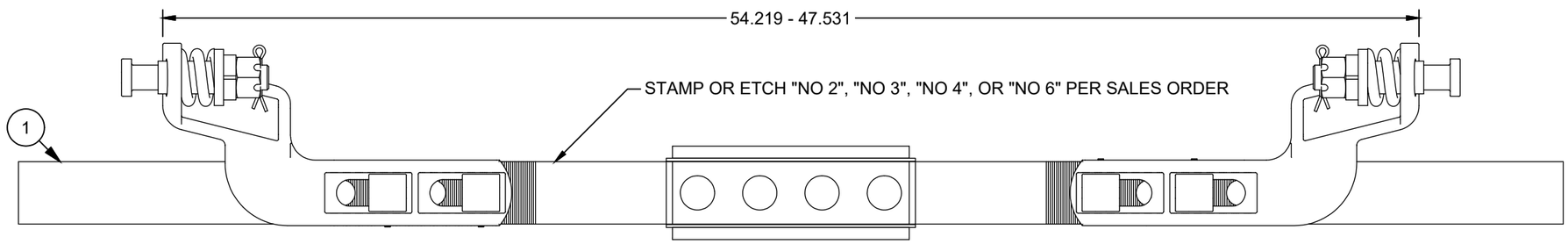

CONTINUITY TESTING:
NO LESS THAN 10 MegOhm at 500 VOLTS

1ST_____

LAST_____

VERIFY PRESENCE OF THIMBLE AS INDICATED

VERIFIED BY: _____

DATE: _____

ASSEMBLY - BILL OF MATERIAL

ITEM	QTY	PART NUMBER	DESCRIPTION
1	2	ROD1133	ROD MILLED_1.250_2.500_30.750
2	4	SPPN-INSBUSH125	SWITCH ROD_INS BUSHING_1.000_1.469
3	1	GN-INSPLATE	SWITCH ROD_INS PLATE_.125_2.500_10.000
4	1	SPPN-CRICHANNEL	SWITCH ROD_INS CHANNEL_CR 73518 G
5	1	SPPN-SPLTBNSF	SWITCH ROD_SPLICE PLATE_BNSF 241600
6	1	SPPN-SPLICEPLTE	SWITCH ROD_SPLICE PLATE_.500_2.500_9.500
7	4	TB-HUCKPIN100	BOLT HUCK_.750_2.500-2.750
8	4	TB-HUCKCOLL	NUT HUCK_.750
9	2	SPPN-RCBNSF278A	ROCKER CLIP ASSY_BNSF 241602-AREA 222 08_CLIP AB 2 7/8
10	4	LNP-AREA	WASHER LOCK_1.000_.500
11	4	TB-PCASTLE	NUT CASTLE_1.00
12	4	TB-G8THP0550	BOLT THIN_1.000_5.500

UNLESS OTHERWISE SPECIFIED DIMENSIONS ARE IN INCHES

.X	.XX	.XXX	ANGLE
± .125	± .063	± .031	± 1/4°

C:\Unitrac\Switch Rods Insulated\#2 Rod\SWR2066.idw

DRAWN	J.RHYNE	5/17/2017
CHECK	H.BLADE	5/24/2017
SHEET	1 OF 1	SIZE B

UNITRAC RAILROAD MATERIALS, INC.
PO BOX 7098
KNOXVILLE, TN 37921

TITLE
SWITCH ROD_2_INS_1.250_ROCKER_AREA 222 08_NO BASKET_CLIP AB 2 7/8

IN MAS	DRAWING NO.	REV
5/24/2017	SWR2066	

THE DOCUMENT AND THE DATA DISCLOSED HERE IN OR HERE WITH IS NOT TO BE REPRODUCED, USED, OR DISCLOSED IN WHOLE OR IN PART TO ANYONE WITHOUT THE PERMISSION OF UNITRAC RAILROAD MATERIALS INC.

SIGN OFF BLOCK

INITIALS AND DATE ALLOW PROCESS CONTINUATION

CHECK MATERIAL RECEIVED AGAINST PRINT

SAW CUT ENDS MUST BE CUT SQUARE WITHIN 1/16"

RECORD ACTUAL DIMENSIONS FOR 1ST AND LAST PART.

S.O. # _____

	INITIALS	DATE
SAW		
MILL		
STAMPING/ETCHING		
DRILLING		
WELDING		
ASSEMBLY		
PUNCHING		

COMMENTS _____

IF ANY DIMENSION DOES NOT MEET TOLERANCES ON THIS DRAWING STOP PROCESS AND NOTIFY SUPERVISOR

CONTINUITY TESTING:
NO LESS THAN 10 MegOhm at 500 VOLTS

1ST_____

LAST_____

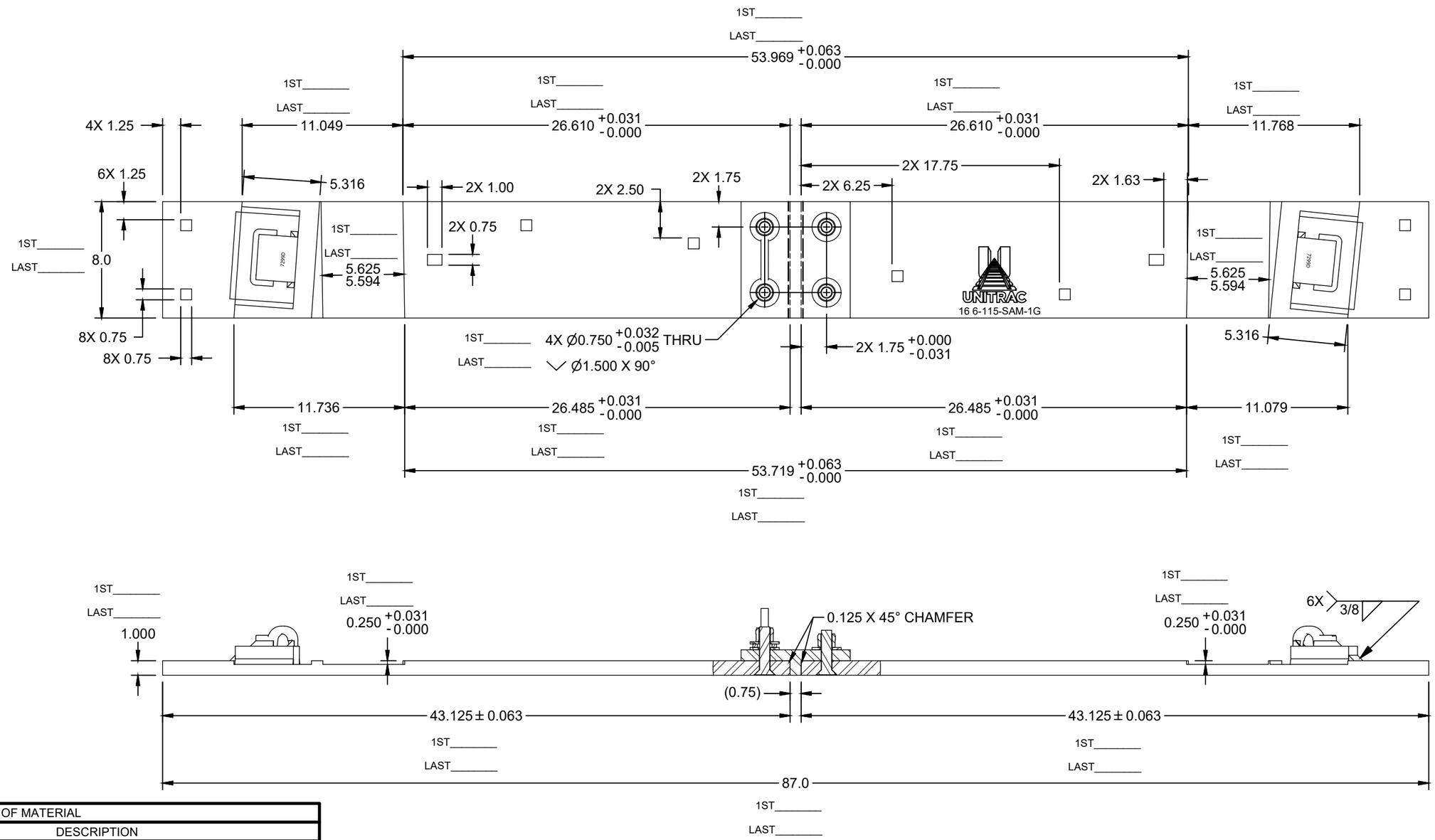

VERTEX = 0"

ASSEMBLY - BILL OF MATERIAL

ITEM	QTY	PART NUMBER	DESCRIPTION
1	2	RS100800A36	RAW STOCK_A36_1.000_8.000
2	2	PBNPDWOSBKD	BRACE BLOCK_PBN_7299_DOMESTIC_MILL-FLAT
3	2	PN-PD-ECLIPD	E-CLIP_RH_DOMESTIC
4	2	PBN115REBWD	BRACE WASHER_115-132_BOLTLESS_DOMESTIC
5	2	PBN115REBBOSURE	BRACE_115_SUREFIT
6	1	PBN-GPPLYIN1IN	GAGE PLATE_INSULATOR_1.000_8.000
7	1	PBN-LHGPCSX2340	LIFTING HOOK_CSX 2340
8	4	TB-HUCKCOLL	NUT HUCK_.750
9	2	TB-HUCKPIN-B	BOLT HUCK_.750_2.000-2.250
10	2	TB-HUCKPIN1125	BOLT HUCK_.750_1.750-2.000
11	6	LN-HUCKFLATWASH	WASHER HUCK_.750

UNLESS OTHERWISE SPECIFIED DIMENSIONS ARE IN INCHES

.X	.XX	.XXX	ANGLE
± .125	± .063	± .031	± 1/4°

DRAWN	S.KENT	2/13/2020
CHECK	C.MCBRIDE	2/13/2020
SHEET 1 OF 1	SIZE B	

C:\Unitrac\Plating-Gage\AREMA\GPA1875.idw

UNITRAC RAILROAD MATERIALS, INC.
PO BOX 7098
KNOXVILLE, TN 37921

TITLE: PLATE GAGE_115RE_01G_16 6_INS_SAM_PAN_MILL_SQ_AREA 111 03-112 03_DOMESTIC

IN MAS	DRAWING NO.	REV
2/13/2020	GPA1875	

THE DOCUMENT AND THE DATA DISCLOSED HERE IN OR HERE WITH IS NOT TO BE REPRODUCED, USED, OR DISCLOSED IN WHOLE OR IN PART TO ANYONE WITHOUT THE PERMISSION OF UNITRAC RAILROAD MATERIALS.

SIGN OFF BLOCK

INITIALS AND DATE ALLOW PROCESS CONTINUATION

CHECK MATERIAL RECEIVED AGAINST PRINT

SAW CUT ENDS MUST BE CUT SQUARE WITHIN 1/16"

RECORD ACTUAL DIMENSIONS FOR 1ST AND LAST PART.

S.O. # _____

	INITIALS	DATE
SAW		
MILL		
STAMPING/ETCHING		
DRILLING		
WELDING		
ASSEMBLY		
PUNCHING		

COMMENTS _____

IF ANY DIMENSION DOES NOT MEET TOLERANCES ON THIS DRAWING STOP PROCESS AND NOTIFY SUPERVISOR

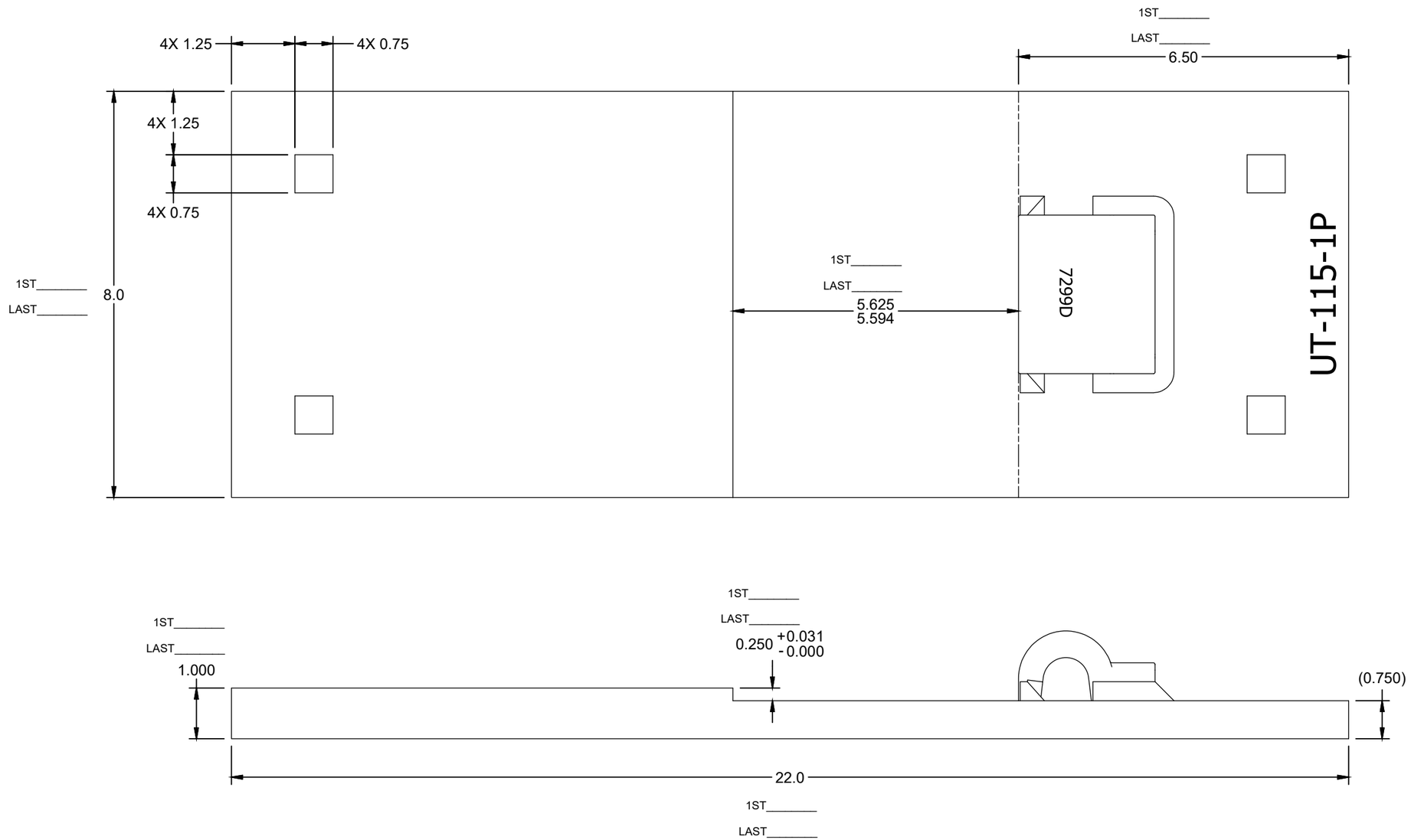

ASSEMBLY - BILL OF MATERIAL

ITEM	QTY	PART NUMBER	DESCRIPTION
1	1	RS100800A36	RAW STOCK_A36_1.000_8.000
2	1	PBN115REWS7299D	PBN_7299_DOMESTIC_FLAT
3	1	PN-PD-ECLIPD	E-CLIP_RH_DOMESTIC

UNLESS OTHERWISE SPECIFIED DIMENSIONS ARE IN INCHES

.X	.XX	.XXX	ANGLE
± .125	± .063	± .031	± 1/4°

DRAWN	S.KENT	2/13/2020
CHECK	C.MCBRIDE	2/13/2020
SHEET	1 OF 1	SIZE B

C:\Unitrac\Plating-Front Switch\AREMA\FSPA1341.idw

UNITRAC RAILROAD MATERIALS
PO BOX 7098
KNOXVILLE, TN 37921

TITLE: PLATE FS_115RE_01P_PAN_MILL_SQ_AREA 223 03_MOD-D_FLAT PANDROL_DOMESTIC

IN MAS	DRAWING NO.	REV
2/13/2020	FSPA1341	

THE DOCUMENT AND THE DATA DISCLOSED HERE IN OR HERE WITH IS NOT TO BE REPRODUCED, USED, OR DISCLOSED IN WHOLE OR IN PART TO ANYONE WITHOUT THE PERMISSION OF UNITRAC RAILROAD MATERIALS INC.

SIGN OFF BLOCK

INITIALS AND DATE ALLOW PROCESS CONTINUATION

CHECK MATERIAL RECEIVED AGAINST PRINT

SAW CUT ENDS MUST BE CUT SQUARE WITHIN 1/16"

RECORD ACTUAL DIMENSIONS FOR 1ST AND LAST PART.

S.O. # _____

	INITIALS	DATE
SAW		
MILL		
STAMPING/ETCHING		
DRILLING		
WELDING		
ASSEMBLY		
PUNCHING		

COMMENTS _____

IF ANY DIMENSION DOES NOT MEET TOLERANCES ON THIS DRAWING STOP PROCESS AND NOTIFY SUPERVISOR

REVISION HISTORY

REV	DATE	REV AUTHOR	CHECKED DATE	CHECKED BY	ECR#	CHANGE NOTE
A	1/15/2014	M.COOPER	2/24/2014	H.BLADE	673	ITEM 3 WAS PN-PD-ECLIP, NOW PN-PD-ECLIPD; UPDATED TO CURRENT STANDARDS
B	10/12/2017	S.KENT	10/18/2017	H.BLADE	1257	UPDATED POCKET PER ES-020; SEE ECR FOR DIMENSIONAL CHANGES.

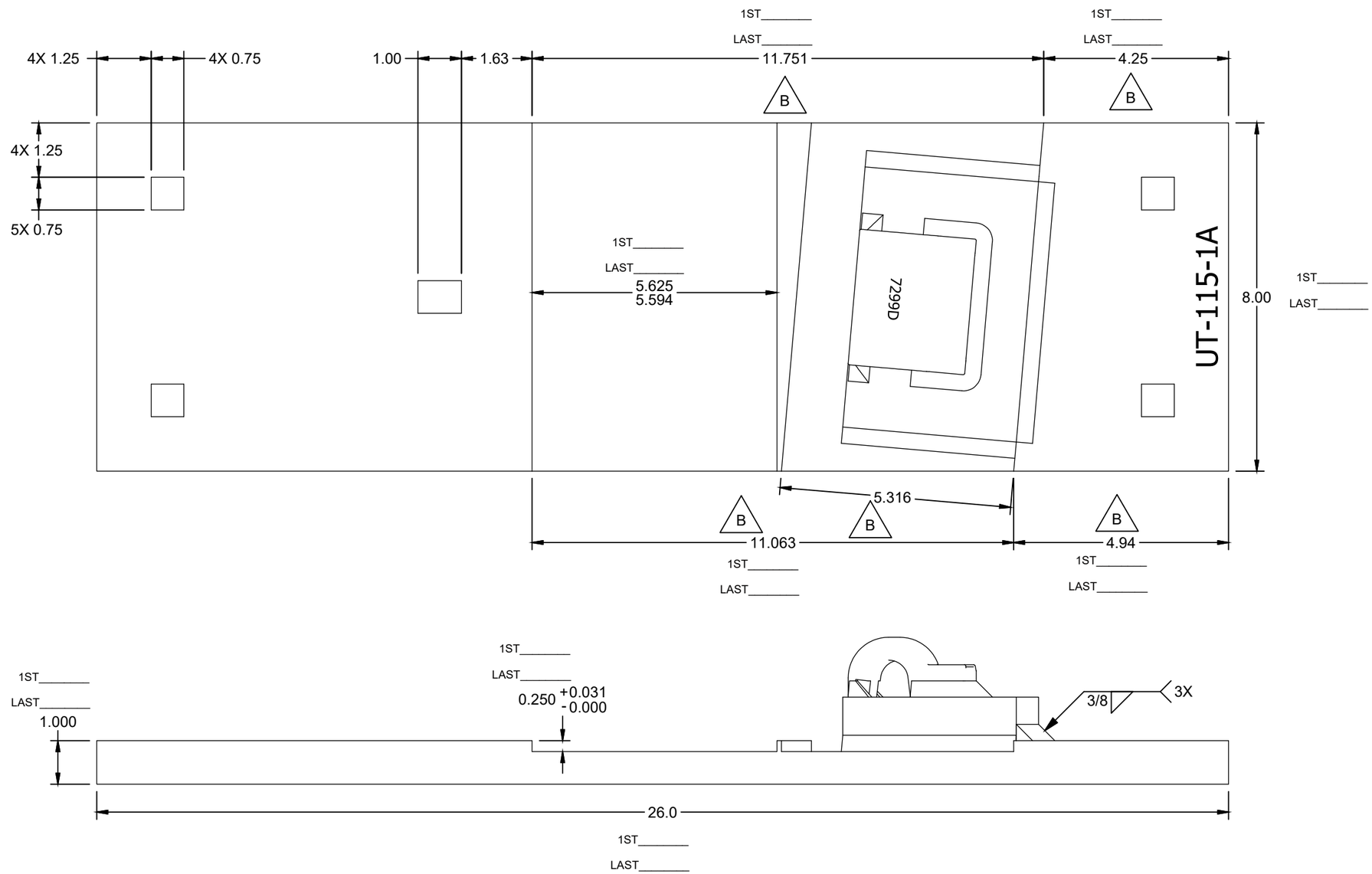

ASSEMBLY - BILL OF MATERIAL

ITEM	QTY	PART NUMBER	DESCRIPTION
1	1	RS100800A36	RAW STOCK_A36_1.000_8.000
2	1	PBNPDWOSBKD	BRACE BLOCK_PBN_7299_DOMESTIC_MILL-FLAT
3	1	PN-PD-ECLIPD	E-CLIP_RH_DOMESTIC
4	1	PBN115REBBOSURE	BRACE_115_SUREFIT
5	1	PBN115REBWD	BRACE WASHER_115-132_BOLTLESS_DOMESTIC

UNLESS OTHERWISE SPECIFIED DIMENSIONS ARE IN INCHES

.X	.XX	.XXX	ANGLE
± .125	± .063	± .031	± 1/4°

DRAWN	S.KENT	9/19/2012
CHECK	H.BLADE	9/28/2012
SHEET	1 OF 1	SIZE B

C:\Unitrac\Plating-Front Switch\AREMA\FSPA1088.idw

UNITRAC RAILROAD MATERIALS, INC.

PO BOX 7098
KNOXVILLE, TN 37921

TITLE: PLATE FS_115RE_01A_PAN_MILL_SQ_AREA 223 03_DOMESTIC

IN MAS	DRAWING NO.	REV
09/28/2012	FSPA1088	B

THE DOCUMENT AND THE DATA DISCLOSED HERE IN OR HERE WITH IS NOT TO BE REPRODUCED, USED, OR DISCLOSED IN WHOLE OR IN PART TO ANYONE WITHOUT THE PERMISSION OF UNITRAC RAILROAD MATERIALS INC.

REVISION HISTORY

REV	DATE	REV AUTHOR	CHECKED DATE	CHECKED BY	ECR#	CHANGE NOTE
A	10/10/2017	S.KENT	10/18/2017	H.BLADE	1257	UPDATED POCKET PER ES-020; ITEM #3 WAS PN-PD-ECLIP; ITEM #4 WAS PBN132REBBOD; SEE ECR FOR DIMENSIONAL CHANGES.

SIGN OFF BLOCK

INITIALS AND DATE ALLOW PROCESS CONTINUATION

CHECK MATERIAL RECEIVED AGAINST PRINT

SAW CUT ENDS MUST BE CUT SQUARE WITHIN 1/16"

RECORD ACTUAL DIMENSIONS FOR 1ST AND LAST PART.

S.O. # _____

	INITIALS	DATE
SAW		
MILL		
STAMPING/ETCHING		
DRILLING		
WELDING		
ASSEMBLY		
PUNCHING		

COMMENTS _____

IF ANY DIMENSION DOES NOT MEET TOLERANCES ON THIS DRAWING STOP PROCESS AND NOTIFY SUPERVISOR

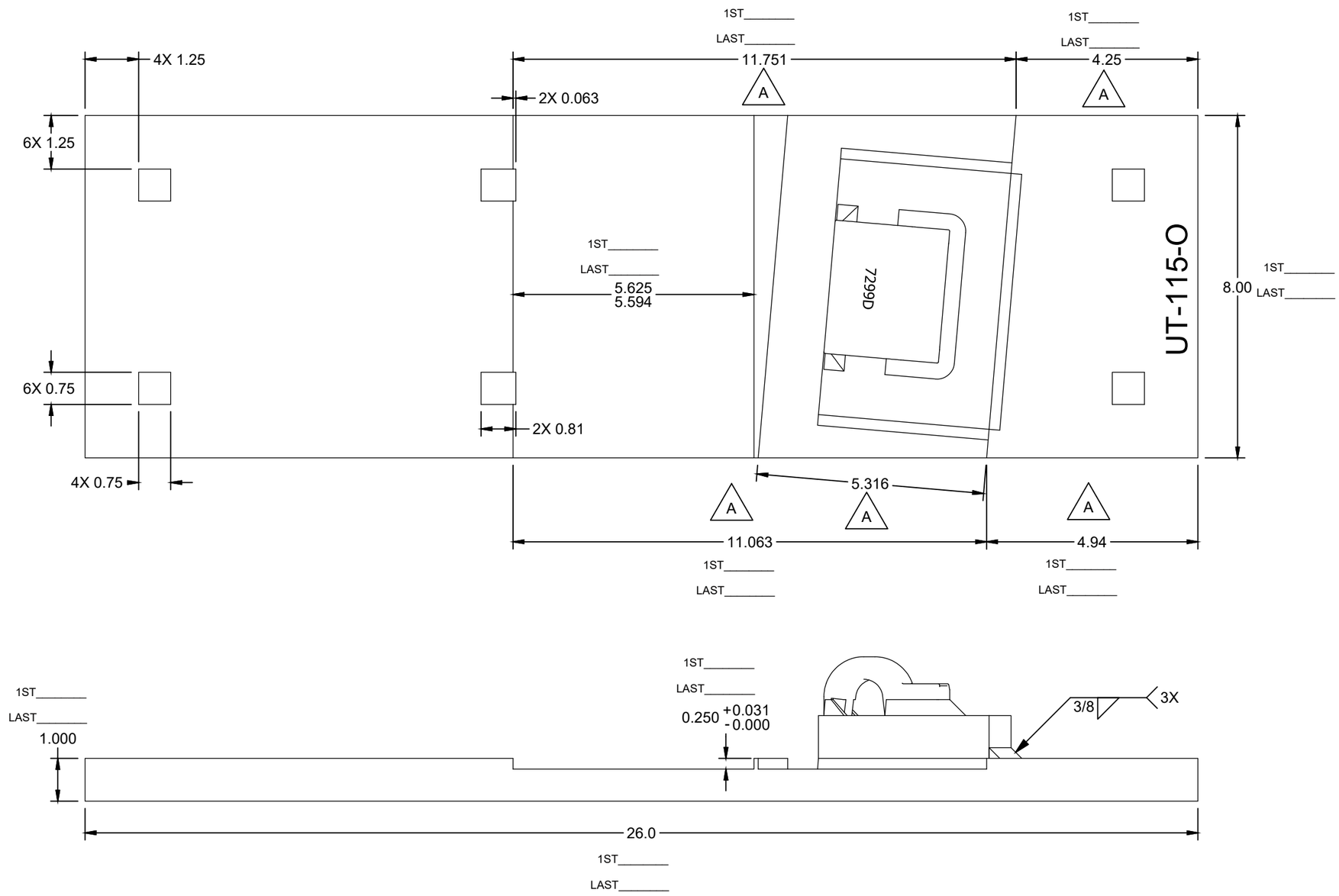

ASSEMBLY - BILL OF MATERIAL

ITEM	QTY	PART NUMBER	DESCRIPTION
1	1	RS100800A36	RAW STOCK_A36_1.000_8.000
2	1	PBNPDWOSBKD	BRACE BLOCK_PBN_7299_DOMESTIC_MILL-FLAT
3	1	PN-PD-ECLIPD	E-CLIP_RH_DOMESTIC
4	1	PBN115REBBOSURE	BRACE_115_SUREFIT
5	1	PBN115REBWD	BRACE WASHER_115-132_BOLTLESS_DOMESTIC

UNLESS OTHERWISE SPECIFIED DIMENSIONS ARE IN INCHES

.X	.XX	.XXX	ANGLE
± .125	± .063	± .031	± 1/4°

DRAWN S.KENT 11/14/2012
CHECK H.BLADE 11/21/2012
SHEET 1 OF 1
SIZE B

C:\Unitrac\Plating-Front Switch\AREMA\FSPA1125.iDW

UNITRAC RAILROAD MATERIALS, INC.
PO BOX 7098
KNOXVILLE, TN 37921

TITLE PLATE FS_115RE_O_PAN_MILL_SQ_AREA 223 03_DOMESTIC

IN MAS 11/26/2012
DRAWING NO. FSPA1125
REV A

THE DOCUMENT AND THE DATA DISCLOSED HERE IN OR HERE WITH IS NOT TO BE REPRODUCED, USED, OR DISCLOSED IN WHOLE OR IN PART TO ANYONE WITHOUT THE PERMISSION OF UNITRAC RAILROAD MATERIALS INC.

REVISION HISTORY

REV	DATE	REV AUTHOR	CHECKED DATE	CHECKED BY	ECR#	CHANGE NOTE
A	11/14/2017	S.KENT	11/14/2017	J.RHYNE	1277	UPDATED POCKET SKETCH TO CURRENT ES-020 STANDARD; SEE ECR FOR DIMENSIONAL CHANGES.

SIGN OFF BLOCK

INITIALS AND DATE ALLOW PROCESS CONTINUATION

CHECK MATERIAL RECEIVED AGAINST PRINT

SAW CUT ENDS MUST BE CUT SQUARE WITHIN 1/16"

RECORD ACTUAL DIMENSIONS FOR 1ST AND LAST PART.

S.O. # _____

	INITIALS	DATE
SAW		
MILL		
STAMPING/ETCHING		
DRILLING		
WELDING		
ASSEMBLY		
PUNCHING		

COMMENTS _____

IF ANY DIMENSION DOES NOT MEET TOLERANCES ON THIS DRAWING STOP PROCESS AND NOTIFY SUPERVISOR

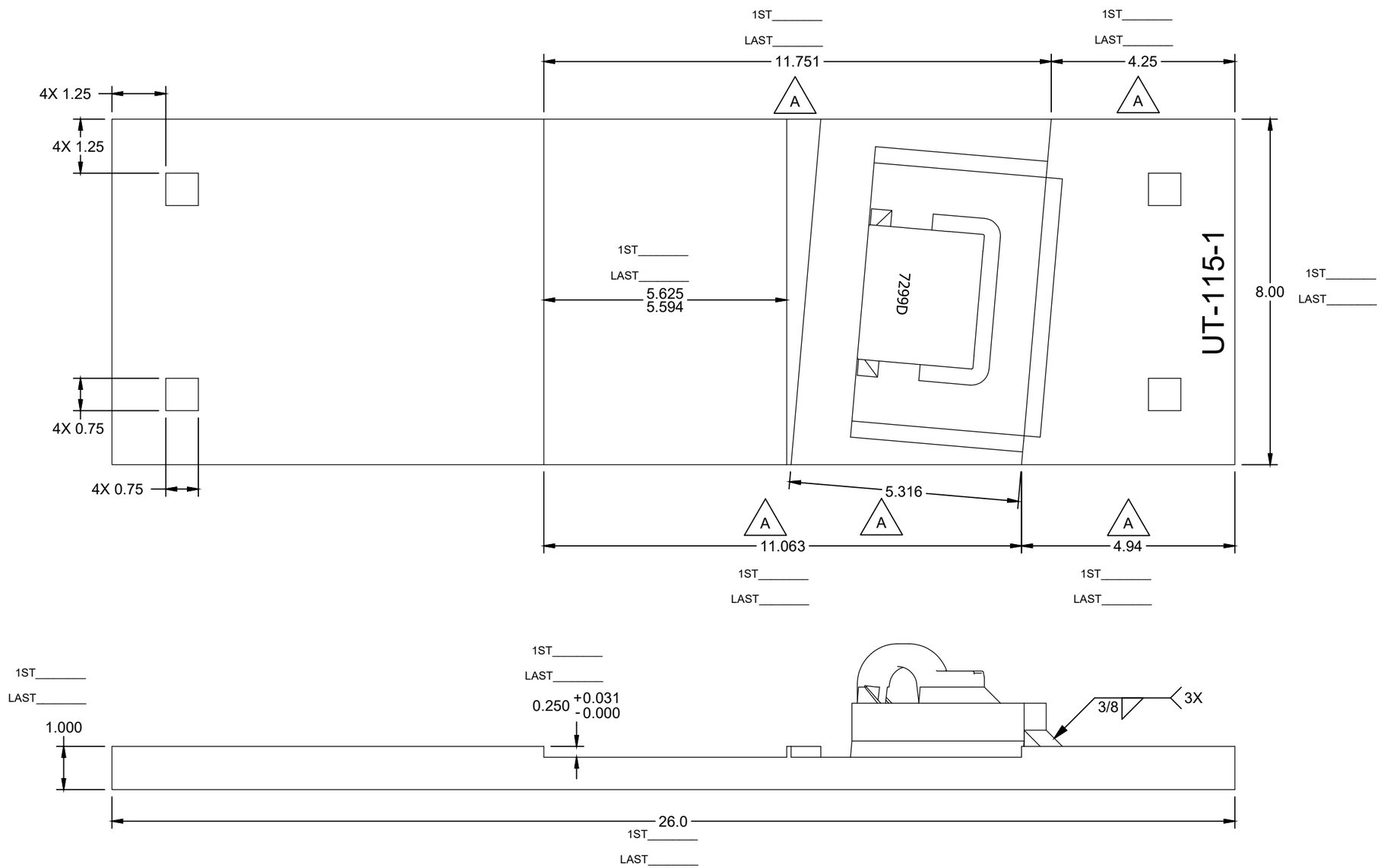

ASSEMBLY - BILL OF MATERIAL

ITEM	QTY	PART NUMBER	DESCRIPTION
1	1	RS100800A36	RAW STOCK_A36_1.000_8.000
2	1	PBNPDWOSBKD	BRACE BLOCK_PBN_7299_DOMESTIC_MILL-FLAT
3	1	PN-PD-ECLIPD	E-CLIP_RH_DOMESTIC
4	1	PBN115REBBOSURE	BRACE_115_SUREFIT
5	1	PBN115REBWD	BRACE WASHER_115-132_BOLTLESS_DOMESTIC

UNLESS OTHERWISE SPECIFIED DIMENSIONS ARE IN INCHES

.X	.XX	.XXX	ANGLE
± .125	± .063	± .031	± 1/4°

DRAWN	M.COOPER	1/13/2014
CHECK	H.BLADE	2/24/2014
SHEET	1 OF 1	SIZE B

C:\Unitrac\Plating-Front Switch\AREMA\FSPA1210.idw

UNITRAC RAILROAD MATERIALS, INC.
PO BOX 7098
KNOXVILLE, TN 37921

TITLE
PLATE FS_115RE_01_PAN_MILL_SQ_AREA 223 03_DOMESTIC

IN MAS	DRAWING NO.	REV
2/24/2014	FSPA1210	A

THE DOCUMENT AND THE DATA DISCLOSED HERE IN OR HERE WITH IS NOT TO BE REPRODUCED, USED, OR DISCLOSED IN WHOLE OR IN PART TO ANYONE WITHOUT THE PERMISSION OF UNITRAC RAILROAD MATERIALS.

SIGN OFF BLOCK

INITIALS AND DATE ALLOW PROCESS CONTINUATION

CHECK MATERIAL RECEIVED AGAINST PRINT

SAW CUT ENDS MUST BE CUT SQUARE WITHIN 1/16"

RECORD ACTUAL DIMENSIONS FOR 1ST AND LAST PART.

S.O. # _____

	INITIALS	DATE
SAW		
MILL		
STAMPING/ETCHING		
DRILLING		
WELDING		
ASSEMBLY		
PUNCHING		

COMMENTS _____

IF ANY DIMENSION DOES NOT MEET TOLERANCES ON THIS DRAWING STOP PROCESS AND NOTIFY SUPERVISOR

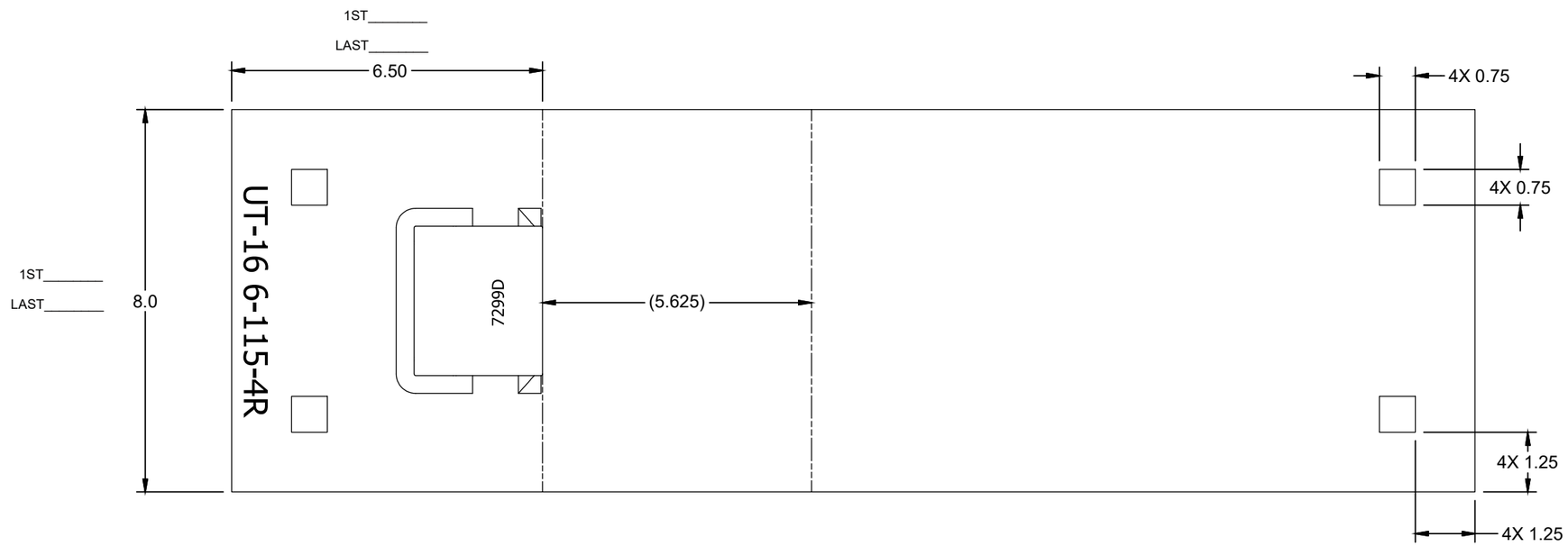

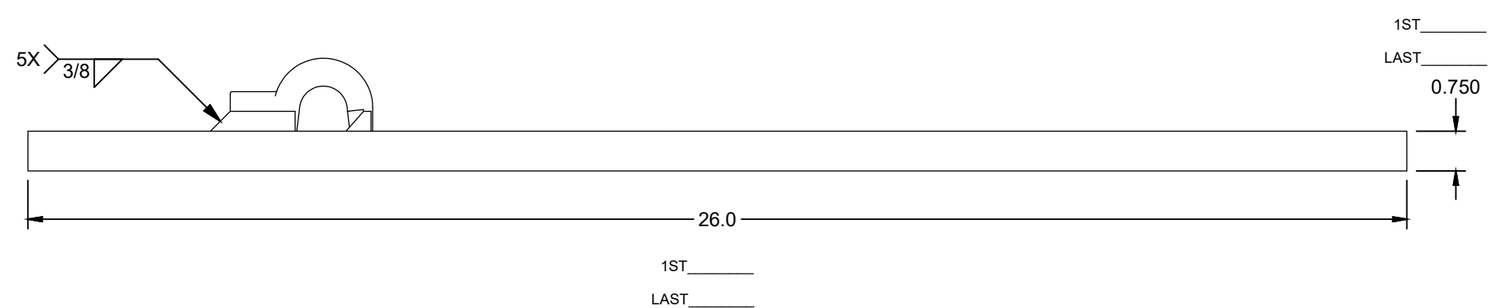

ASSEMBLY - BILL OF MATERIAL

ITEM	QTY	PART NUMBER	DESCRIPTION
1	1	RS075800A36	RAW STOCK_A36_0.750_8.000
2	1	PBN115REWS7299D	PBN_7299_DOMESTIC_FLAT
3	1	PN-PD-ECLIPD	E-CLIP_RH_DOMESTIC

UNLESS OTHERWISE SPECIFIED DIMENSIONS ARE IN INCHES

.X	.XX	.XXX	ANGLE
± .125	± .063	± .031	± 1/4°

DRAWN	C.TAYLOR	9/12/2019
CHECK	S.KENT	9/12/2019
SHEET 1 OF 1	SIZE B	

C:\Unitrac\Plating-Front Switch\AREMA\FSPA1330.idw

UNITRAC RAILROAD MATERIALS

PO BOX 7098
KNOXVILLE, TN 37921

TITLE
PLATE FS_115RE_04R_PAN_FLAT_SQ_AREA 112 03_MOD-D_DOMESTIC

IN MAS	DRAWING NO.	REV
9/12/2019	FSPA1330	

THE DOCUMENT AND THE DATA DISCLOSED HERE IN OR HERE WITH IS NOT TO BE REPRODUCED, USED, OR DISCLOSED IN WHOLE OR IN PART TO ANYONE WITHOUT THE PERMISSION OF UNITRAC RAILROAD MATERIALS.

SIGN OFF BLOCK

INITIALS AND DATE ALLOW PROCESS CONTINUATION

CHECK MATERIAL RECEIVED AGAINST PRINT

SAW CUT ENDS MUST BE CUT SQUARE WITHIN 1/16"

RECORD ACTUAL DIMENSIONS FOR 1ST AND LAST PART.

S.O. # _____

	INITIALS	DATE
SAW		
MILL		
STAMPING/ETCHING		
DRILLING		
WELDING		
ASSEMBLY		
PUNCHING		

COMMENTS _____

IF ANY DIMENSION DOES NOT MEET TOLERANCES ON THIS DRAWING STOP PROCESS AND NOTIFY SUPERVISOR

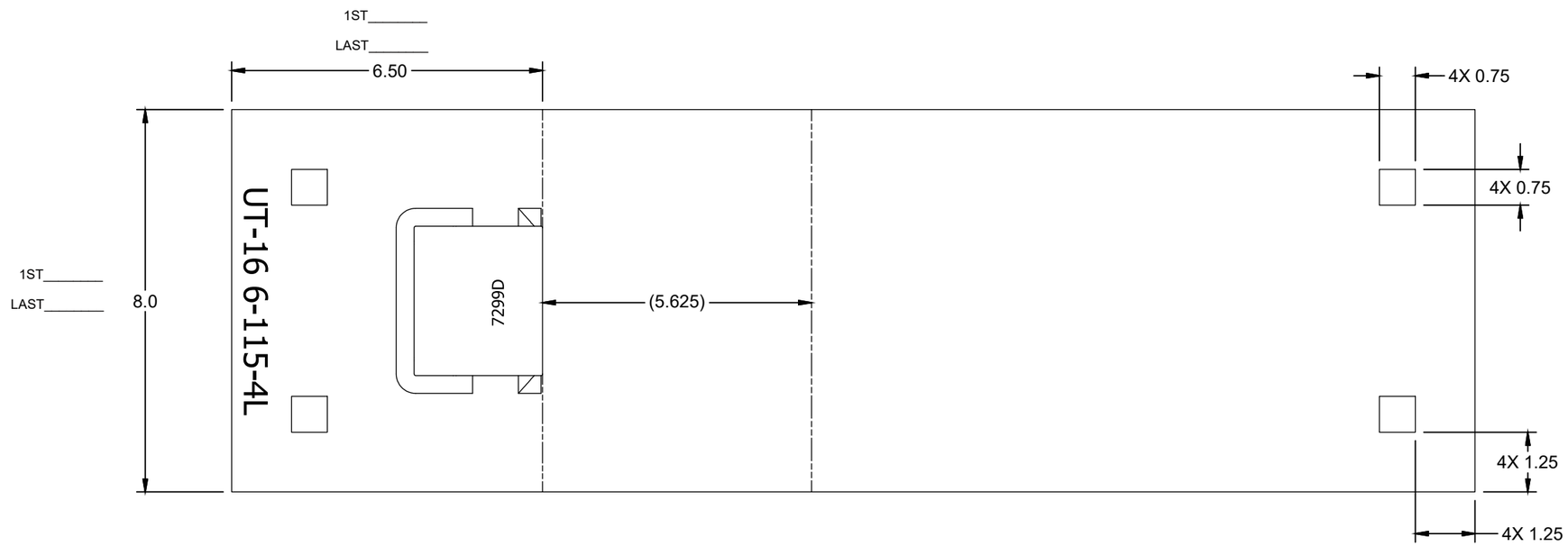

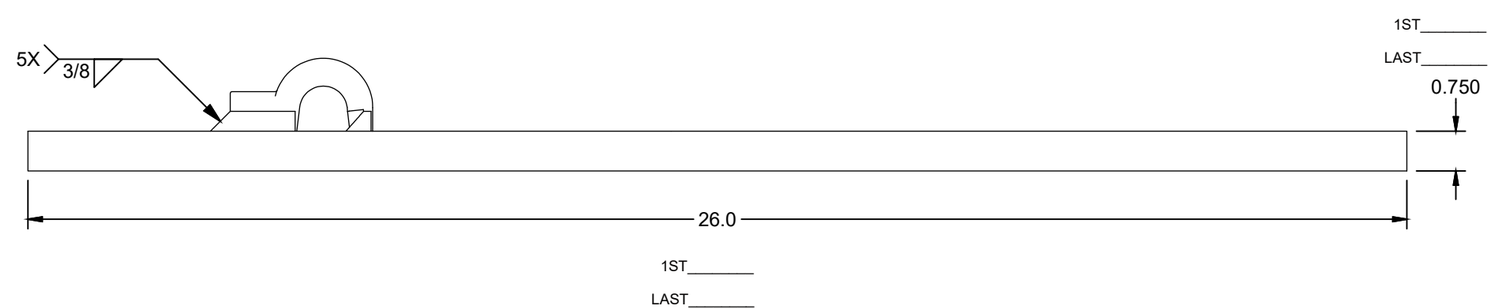

ASSEMBLY - BILL OF MATERIAL

ITEM	QTY	PART NUMBER	DESCRIPTION
1	1	RS075800A36	RAW STOCK_A36_0.750_8.000
2	1	PBN115REWS7299D	PBN_7299_DOMESTIC_FLAT
3	1	PN-PD-ECLIPD	E-CLIP_RH_DOMESTIC

UNLESS OTHERWISE SPECIFIED DIMENSIONS ARE IN INCHES

.X	.XX	.XXX	ANGLE
± .125	± .063	± .031	± 1/4°

DRAWN	C.TAYLOR	9/12/2019
CHECK	S.KENT	9/12/2019
SHEET 1 OF 1	SIZE B	

C:\Unitrac\Plating-Front Switch\AREMA\FSPA1331.idw

UNITRAC RAILROAD MATERIALS
PO BOX 7098
KNOXVILLE, TN 37921

TITLE
PLATE FS_115RE_04L_PAN_FLAT_SQ_AREA 112 03_MOD-D_DOMESTIC

IN MAS	DRAWING NO.	REV
9/12/2019	FSPA1331	

THE DOCUMENT AND THE DATA DISCLOSED HERE IN OR HERE WITH IS NOT TO BE REPRODUCED, USED, OR DISCLOSED IN WHOLE OR IN PART TO ANYONE WITHOUT THE PERMISSION OF UNITRAC RAILROAD MATERIALS.

SIGN OFF BLOCK

INITIALS AND DATE ALLOW PROCESS CONTINUATION

CHECK MATERIAL RECEIVED AGAINST PRINT

SAW CUT ENDS MUST BE CUT SQUARE WITHIN 1/16"

RECORD ACTUAL DIMENSIONS FOR 1ST AND LAST PART.

S.O. # _____

	INITIALS	DATE
SAW		
MILL		
STAMPING/ETCHING		
DRILLING		
WELDING		
ASSEMBLY		
PUNCHING		

COMMENTS _____

IF ANY DIMENSION DOES NOT MEET TOLERANCES ON THIS DRAWING STOP PROCESS AND NOTIFY SUPERVISOR

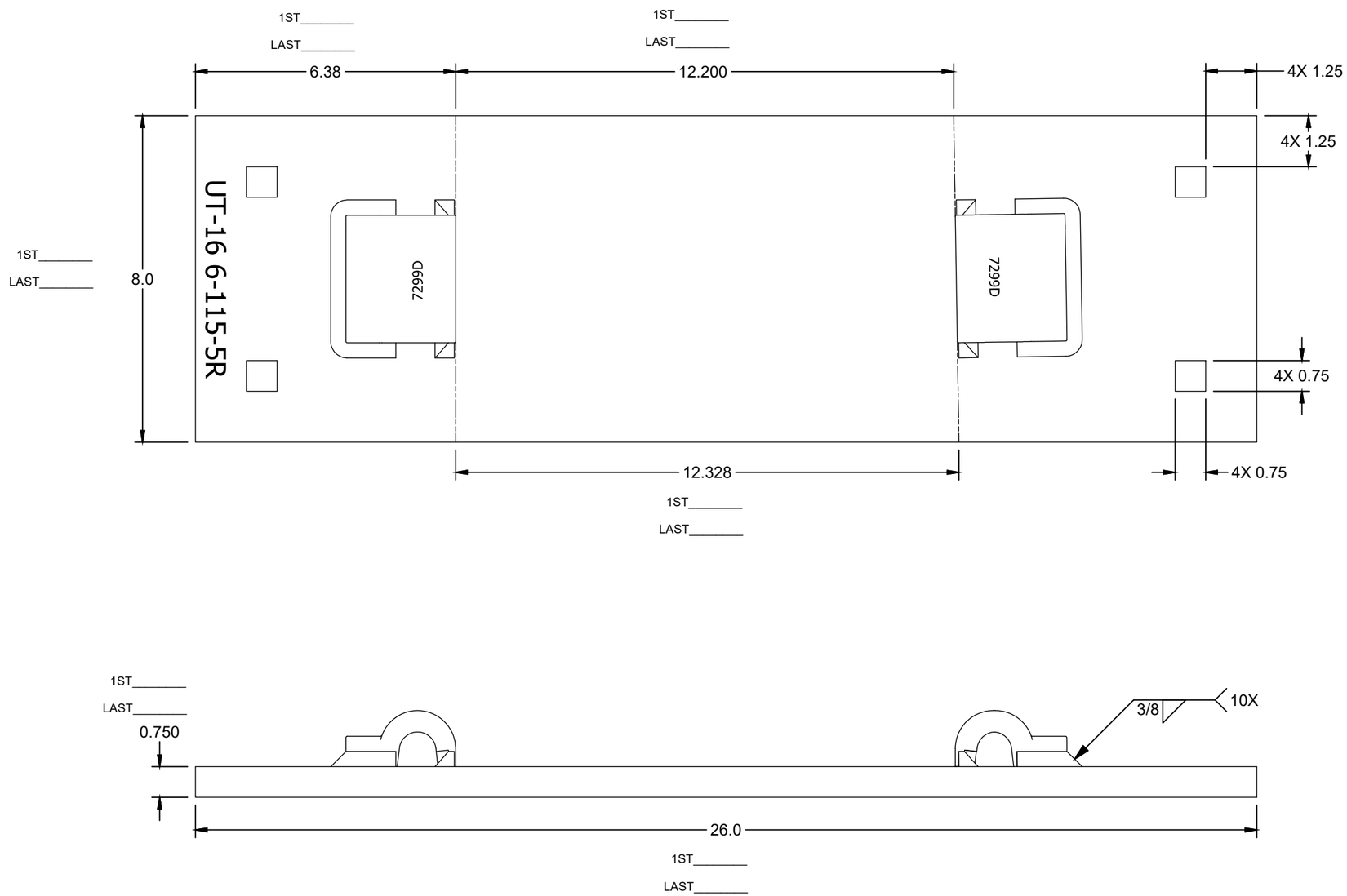

UNLESS OTHERWISE SPECIFIED DIMENSIONS ARE IN INCHES				DRAWN C.TAYLOR	9/12/2019
				CHECK S.KENT	9/12/2019
.X ± .125	.XX ± .063	.XXX ± .031	ANGLE ± 1/4°	SHEET 1 OF 1	SIZE B

C:\Unitrac\Plating-Front Switch\AREMA\FSPA1332.idw

UNITRAC RAILROAD MATERIALS
PO BOX 7098
KNOXVILLE, TN 37921

TITLE
PLATE FS_115RE_05R_PAN_FLAT_SQ_AREA 112 03_MOD-D_DOMESTIC

IN MAS	DRAWING NO.	REV
9/12/2019	FSPA1332	

THE DOCUMENT AND THE DATA DISCLOSED HERE IN OR HERE WITH IS NOT TO BE REPRODUCED, USED, OR DISCLOSED IN WHOLE OR IN PART TO ANYONE WITHOUT THE PERMISSION OF UNITRAC RAILROAD MATERIALS.

SIGN OFF BLOCK

INITIALS AND DATE ALLOW PROCESS CONTINUATION

CHECK MATERIAL RECEIVED AGAINST PRINT

SAW CUT ENDS MUST BE CUT SQUARE WITHIN 1/16"

RECORD ACTUAL DIMENSIONS FOR 1ST AND LAST PART.

S.O. # _____

	INITIALS	DATE
SAW		
MILL		
STAMPING/ETCHING		
DRILLING		
WELDING		
ASSEMBLY		
PUNCHING		

COMMENTS _____

IF ANY DIMENSION DOES NOT MEET TOLERANCES ON THIS DRAWING STOP PROCESS AND NOTIFY SUPERVISOR

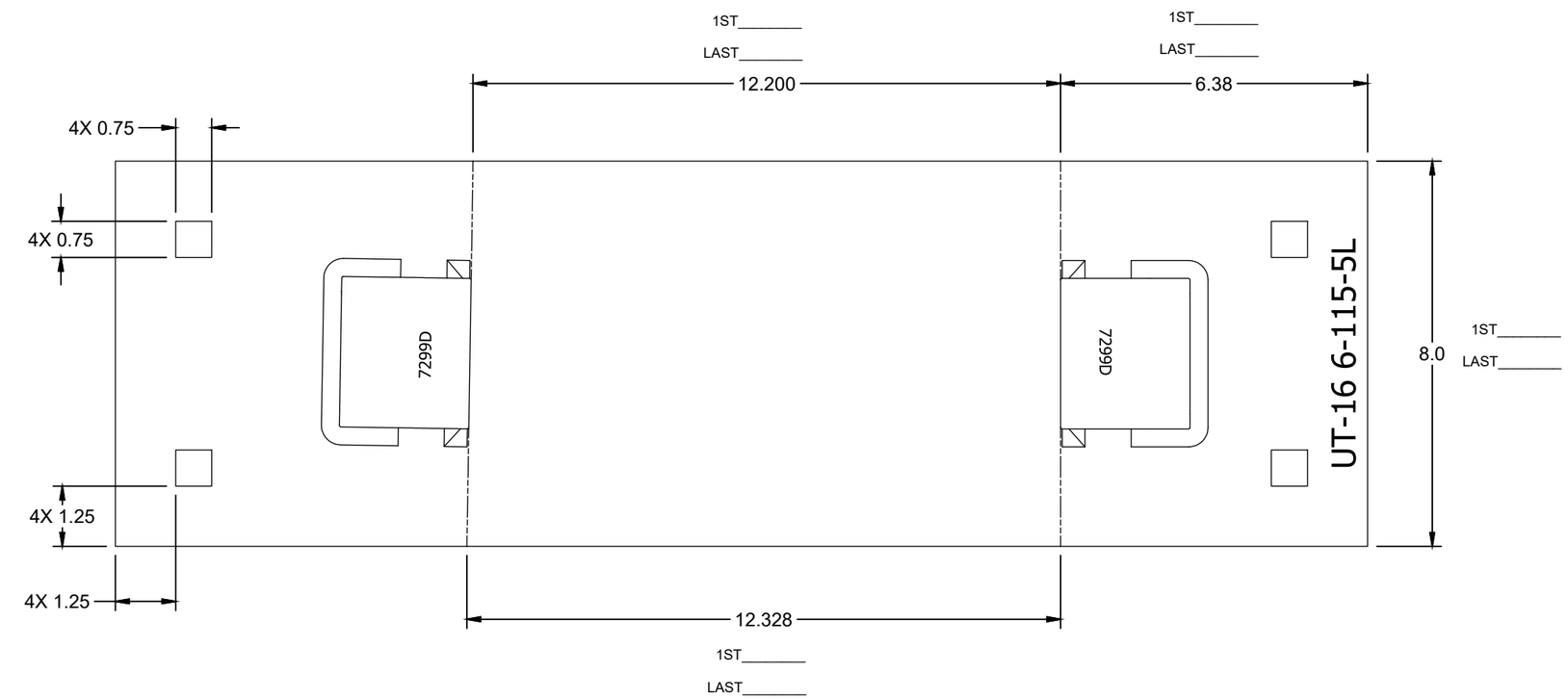

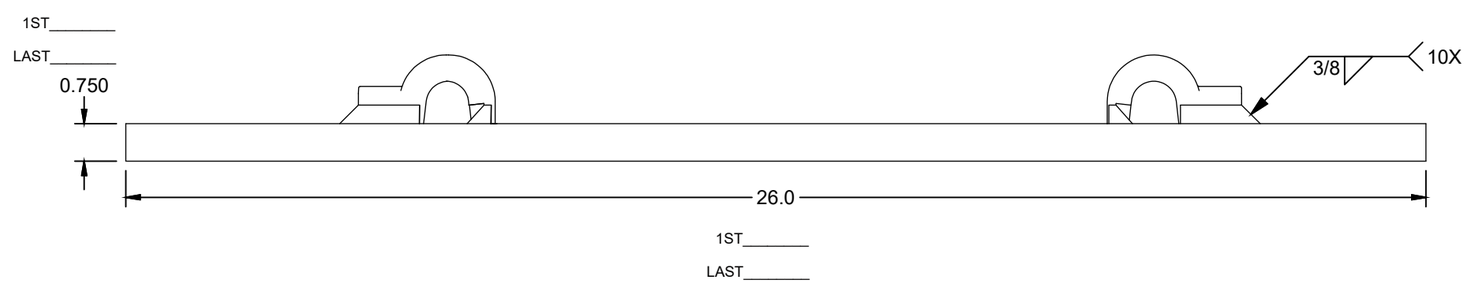

ASSEMBLY - BILL OF MATERIAL

ITEM	QTY	PART NUMBER	DESCRIPTION
1	1	RS075800A36	RAW STOCK_A36_0.750_8.000
2	2	PBN115REWS7299D	PBN_7299_DOMESTIC_FLAT
3	2	PN-PD-ECLIPD	E-CLIP_RH_DOMESTIC

UNLESS OTHERWISE SPECIFIED DIMENSIONS ARE IN INCHES

.X	.XX	.XXX	ANGLE
± .125	± .063	± .031	± 1/4°

DRAWN	C.TAYLOR	9/12/2019
CHECK	S.KENT	9/12/2019
SHEET 1 OF 1	SIZE B	

C:\Unitrac\Plating-Front Switch\AREMA\FSPA1333.idw

UNITRAC RAILROAD MATERIALS
PO BOX 7098
KNOXVILLE, TN 37921

TITLE
PLATE FS_115RE_05L_PAN_FLAT_SQ_AREA 112 03_MOD-D_DOMESTIC

IN MAS	DRAWING NO.	REV
9/12/2019	FSPA1333	

THE DOCUMENT AND THE DATA DISCLOSED HERE IN OR HERE WITH IS NOT TO BE REPRODUCED, USED, OR DISCLOSED IN WHOLE OR IN PART TO ANYONE WITHOUT THE PERMISSION OF UNITRAC RAILROAD MATERIALS INC.

REVISION HISTORY

REV	DATE	REV AUTHOR	CHECKED DATE	CHECKED BY	ECR#	CHANGE NOTE
A	2/22/2017	J.RHYNE	2/24/2017	S.KENT	1168	UPDATED TO CURRENT STANDARDS; ETCHING WAS 115RE - 2; LOWER TOLERANCE DIMENSION 5.594 WAS 5.593; ITEM #3 WAS PN-PD-ECLIP
B	10/12/2017	S.KENT	10/18/2017	H.BLADE	1257	UPDATED POCKET PER ES-020; SEE ECR FOR DIMENSIONAL CHANGES.

SIGN OFF BLOCK

INITIALS AND DATE ALLOW PROCESS CONTINUATION

CHECK MATERIAL RECEIVED AGAINST PRINT

SAW CUT ENDS MUST BE CUT SQUARE WITHIN 1/16"

RECORD ACTUAL DIMENSIONS FOR 1ST AND LAST PART.

S.O. # _____

	INITIALS	DATE
SAW		
MILL		
STAMPING/ETCHING		
DRILLING		
WELDING		
ASSEMBLY		
PUNCHING		

COMMENTS _____

IF ANY DIMENSION DOES NOT MEET TOLERANCES ON THIS DRAWING STOP PROCESS AND NOTIFY SUPERVISOR

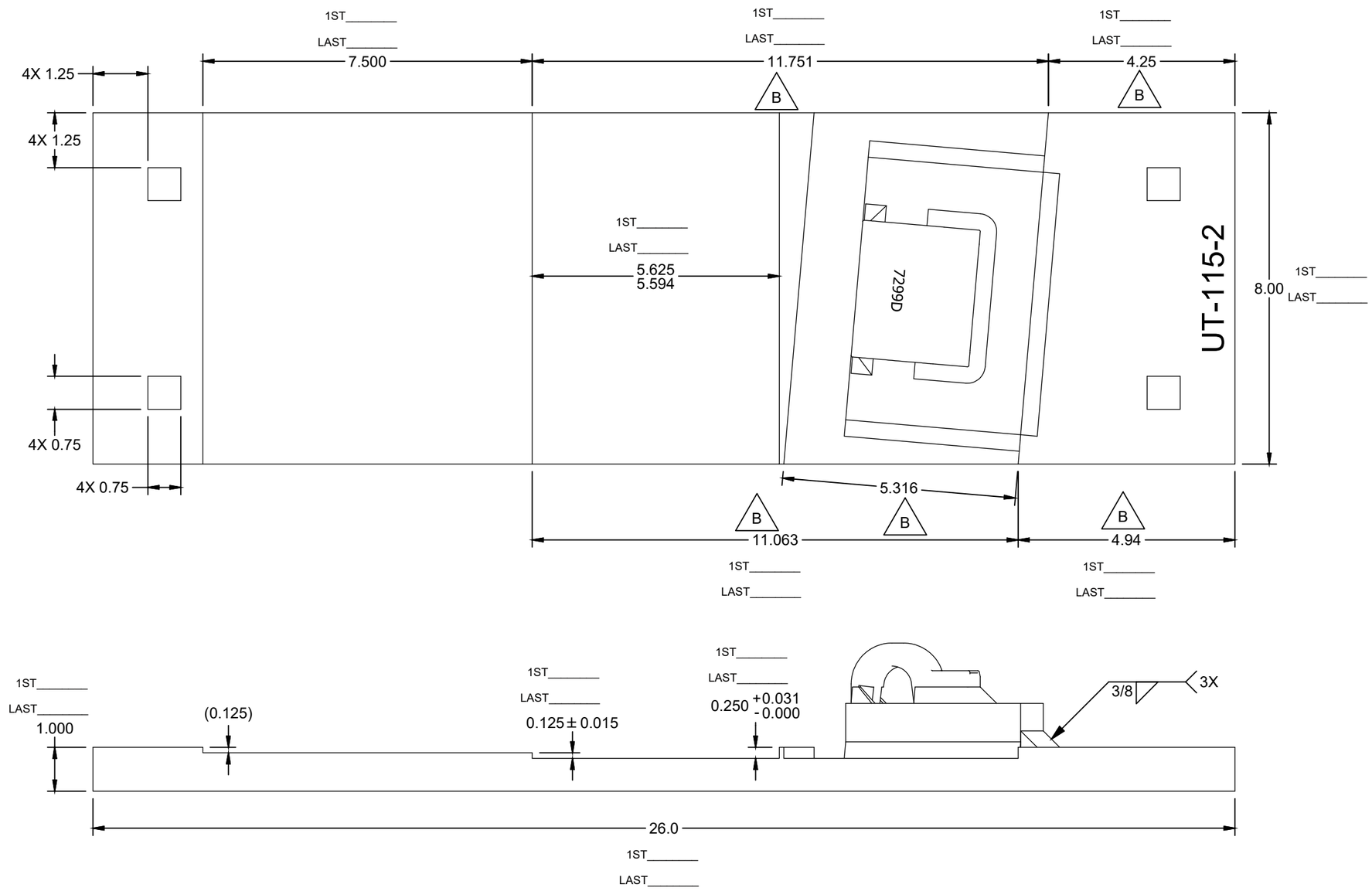

ASSEMBLY - BILL OF MATERIAL

ITEM	QTY	PART NUMBER	DESCRIPTION
1	1	RS100800A36	RAW STOCK_A36_1.000_8.000
2	1	PBNPDWOSBKD	BRACE BLOCK_PBN_7299_DOMESTIC_MILL-FLAT
3	1	PN-PD-ECLIPD	E-CLIP_RH_DOMESTIC
4	1	PBN115REBWD	BRACE WASHER_115-132_BOLTLESS_DOMESTIC
5	1	PBN115REBBOSURE	BRACE_115_SUREFIT

UNLESS OTHERWISE SPECIFIED DIMENSIONS ARE IN INCHES

.X	.XX	.XXX	ANGLE
± .125	± .063	± .031	± 1/4°

DRAWN	C.CARDWELL	3/7/2011
CHECK	R.MATLOCK	3/21/2011
SHEET 1 OF 1	SIZE B	

C:\Unitrac\Plating-Front Switch\AREMA\ZSP115AREA10-02.idw

UNITRAC RAILROAD MATERIALS, INC.
PO BOX 7098
KNOXVILLE, TN 37921

TITLE
PLATE FS_115RE_02_PAN_MILL_SQ_AREA 112 03_DOMESTIC

IN MAS	DRAWING NO.	REV
2/24/2017	ZSP115AREA10-02	B

THE DOCUMENT AND THE DATA DISCLOSED HERE IN OR HERE WITH IS NOT TO BE REPRODUCED, USED, OR DISCLOSED IN WHOLE OR IN PART TO ANYONE WITHOUT THE PERMISSION OF UNITRAC RAILROAD MATERIALS INC.

REVISION HISTORY

REV	DATE	REV AUTHOR	CHECKED DATE	CHECKED BY	ECR#	CHANGE NOTE
A	2/23/2017	J.RHYNE	2/24/2017	S.KENT	1168	UPDATED TO CURRENT STANDARDS; ITEM #3 WAS PN-PD-ECLIP; ETCHING WAS 115RE - 3M

SIGN OFF BLOCK

INITIALS AND DATE ALLOW PROCESS CONTINUATION

CHECK MATERIAL RECEIVED AGAINST PRINT

SAW CUT ENDS MUST BE CUT SQUARE WITHIN 1/16"

RECORD ACTUAL DIMENSIONS FOR 1ST AND LAST PART.

S.O. # _____

	INITIALS	DATE
SAW		
MILL		
STAMPING/ETCHING		
DRILLING		
WELDING		
ASSEMBLY		
PUNCHING		

COMMENTS _____

IF ANY DIMENSION DOES NOT MEET TOLERANCES ON THIS DRAWING STOP PROCESS AND NOTIFY SUPERVISOR

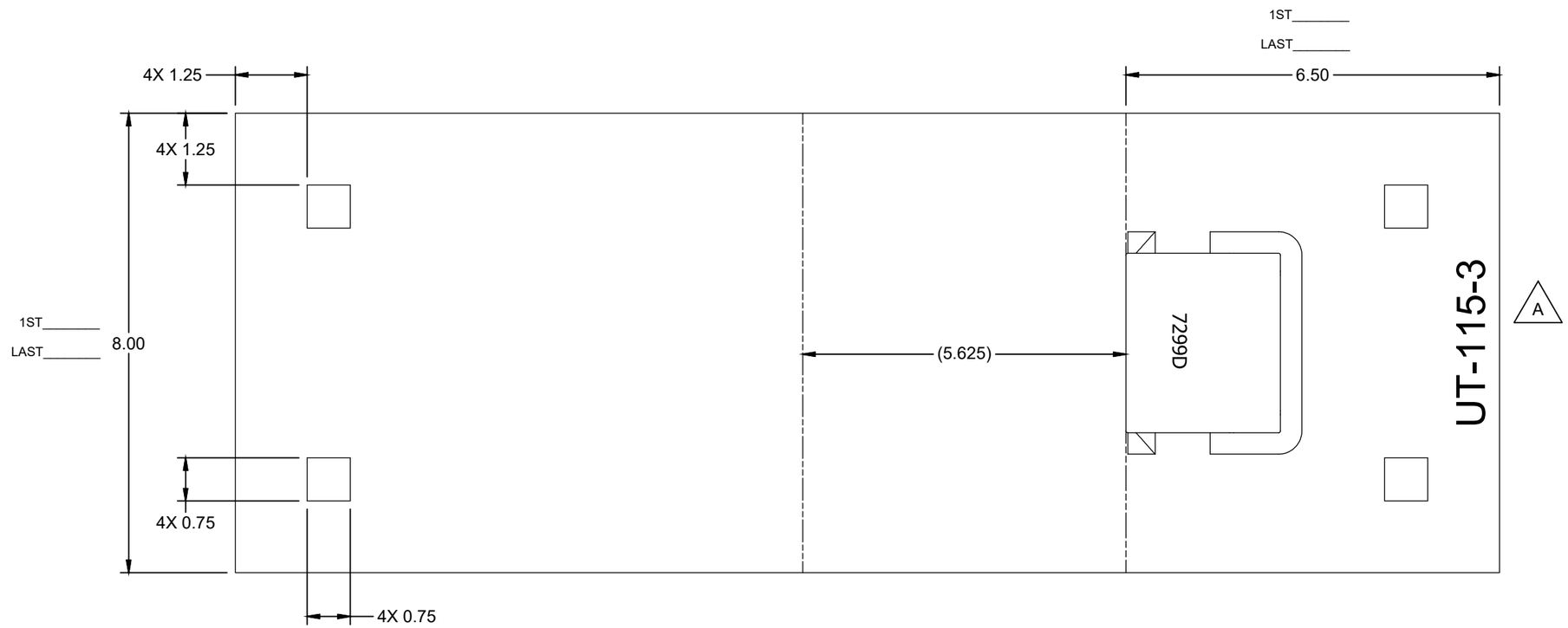

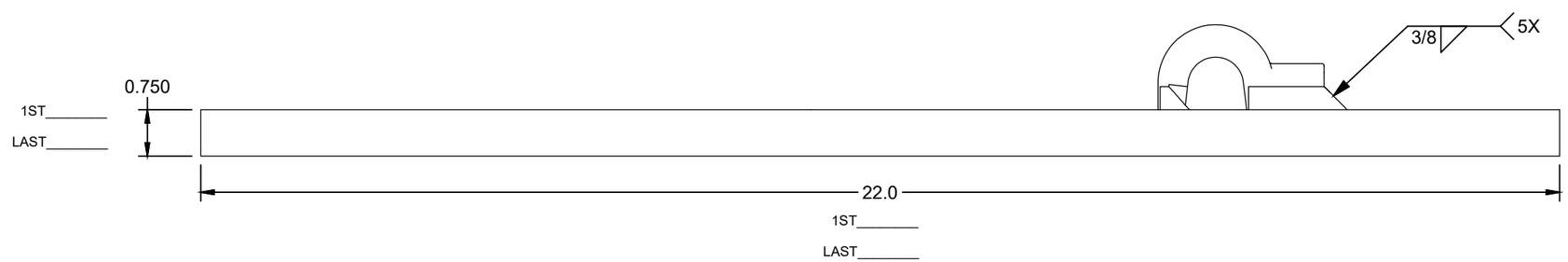

ASSEMBLY - BILL OF MATERIAL

ITEM	QTY	PART NUMBER	DESCRIPTION
1	1	RS075800A36	RAW STOCK_A36_.750_8.000
2	1	PBN115REWS7299D	PBN_7299_DOMESTIC_FLAT
3	1	PN-PD-ECLIPD	E-CLIP_RH_DOMESTIC

UNLESS OTHERWISE SPECIFIED DIMENSIONS ARE IN INCHES

.X	.XX	.XXX	ANGLE
± .125	± .063	± .031	± 1/4°

DRAWN	C.CARDWELL	3/7/2011
CHECK	R.MATLOCK	3/21/2011
SHEET 1 OF 1	SIZE B	

C:\Unitrac\Plating-Front Switch\AREMA\ZSP115AREA10-3M.idw

UNITRAC RAILROAD MATERIALS, INC.
PO BOX 7098
KNOXVILLE, TN 37921

TITLE: PLATE FS_115RE_03_PAN_FLAT_SQ_AREA 112 03_DOMESTIC

IN MAS	DRAWING NO.	REV
2/24/2017	ZSP115AREA10-3M	A

THE DOCUMENT AND THE DATA DISCLOSED HERE IN OR HERE WITH IS NOT TO BE REPRODUCED, USED, OR DISCLOSED IN WHOLE OR IN PART TO ANYONE WITHOUT THE PERMISSION OF UNITRAC RAILROAD MATERIALS INC.

SIGN OFF BLOCK

INITIALS AND DATE ALLOW PROCESS CONTINUATION

CHECK MATERIAL RECEIVED AGAINST PRINT

SAW CUT ENDS MUST BE CUT SQUARE WITHIN 1/16"

RECORD ACTUAL DIMENSIONS FOR 1ST AND LAST PART.

S.O. # _____

	INITIALS	DATE
SAW		
MILL		
STAMPING/ETCHING		
DRILLING		
WELDING		
ASSEMBLY		
PUNCHING		

COMMENTS _____

IF ANY DIMENSION DOES NOT MEET TOLERANCES ON THIS DRAWING STOP PROCESS AND NOTIFY SUPERVISOR

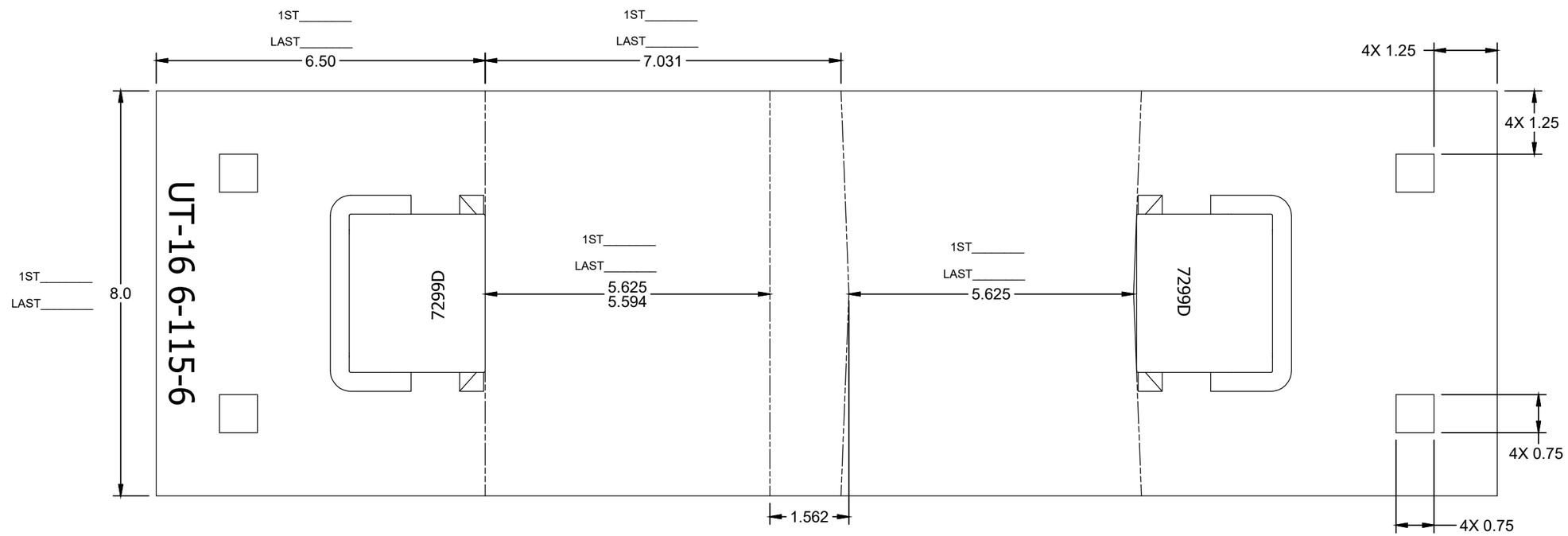

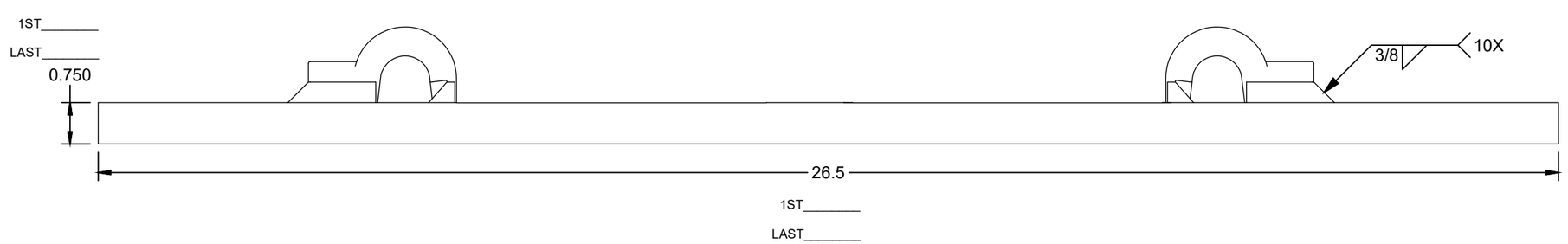

ASSEMBLY - BILL OF MATERIAL

ITEM	QTY	PART NUMBER	DESCRIPTION
1	1	RS075800A36	RAW STOCK_A36_0.750_8.000
2	2	PBN115REWS7299D	PBN_7299_DOMESTIC_FLAT
3	2	PN-PD-ECLIPD	E-CLIP_RH_DOMESTIC

UNLESS OTHERWISE SPECIFIED DIMENSIONS ARE IN INCHES

.X	.XX	.XXX	ANGLE
± .125	± .063	± .031	± 1/4°

DRAWN	S.KENT	2/17/2020
CHECK	C.TAYLOR	2/18/2020
SHEET 1 OF 1	SIZE B	

C:\Unitrac\Plating-Turnout\AREMA\ZTPA3152.idw

UNITRAC RAILROAD MATERIALS, INC.
PO BOX 7098
KNOXVILLE, TN 37921

TITLE
PLATE TO_115RE_8-10_06_PAN_FLAT_SQ_AREA 112 03_MOD-D_DOMESTIC

IN MAS	DRAWING NO.	REV
2/18/2020	ZTPA3152	

THE DOCUMENT AND THE DATA DISCLOSED HERE IN OR HERE WITH IS NOT TO BE REPRODUCED, USED, OR DISCLOSED IN WHOLE OR IN PART TO ANYONE WITHOUT THE PERMISSION OF UNITRAC RAILROAD MATERIALS INC.

SIGN OFF BLOCK

INITIALS AND DATE ALLOW PROCESS CONTINUATION

CHECK MATERIAL RECEIVED AGAINST PRINT

SAW CUT ENDS MUST BE CUT SQUARE WITHIN 1/16"

RECORD ACTUAL DIMENSIONS FOR 1ST AND LAST PART.

S.O. # _____

	INITIALS	DATE
SAW		
MILL		
STAMPING/ETCHING		
DRILLING		
WELDING		
ASSEMBLY		
PUNCHING		

COMMENTS _____

IF ANY DIMENSION DOES NOT MEET TOLERANCES ON THIS DRAWING STOP PROCESS AND NOTIFY SUPERVISOR

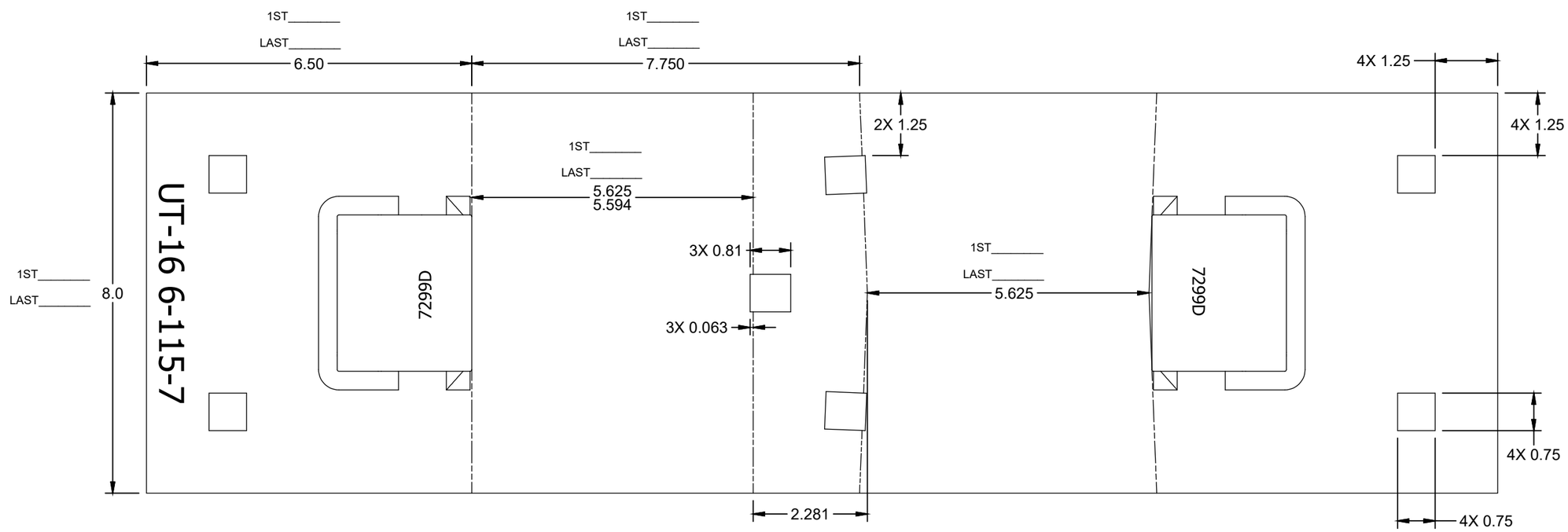

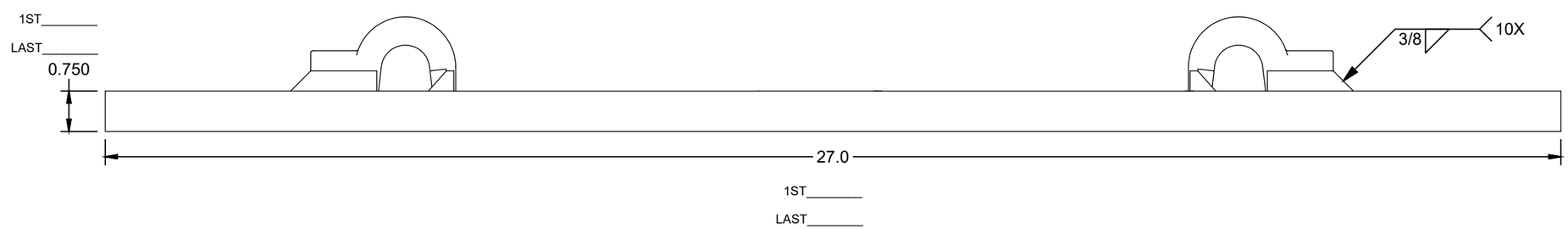

ASSEMBLY - BILL OF MATERIAL

ITEM	QTY	PART NUMBER	DESCRIPTION
1	1	RS075800A36	RAW STOCK_A36_0.750_8.000
2	2	PBN115REWS7299D	PBN_7299_DOMESTIC_FLAT
3	2	PN-PD-ECLIPD	E-CLIP_RH_DOMESTIC

UNLESS OTHERWISE SPECIFIED DIMENSIONS ARE IN INCHES

.X	.XX	.XXX	ANGLE
± .125	± .063	± .031	± 1/4°

DRAWN	S.KENT	2/17/2020
CHECK	C.TAYLOR	2/18/2020
SHEET 1 OF 1	SIZE B	

C:\Unitrac\Plating-Turnout\AREMA\ZTPA3153.idw

UNITRAC RAILROAD MATERIALS, INC.

PO BOX 7098
KNOXVILLE, TN 37921

TITLE
PLATE TO_115RE_8-10_07_PAN_FLAT_SQ_AREA 112 03_MOD-D_DOMESTIC

IN MAS	DRAWING NO.	REV
2/18/2020	ZTPA3153	

THE DOCUMENT AND THE DATA DISCLOSED HERE IN OR HERE WITH IS NOT TO BE REPRODUCED, USED, OR DISCLOSED IN WHOLE OR IN PART TO ANYONE WITHOUT THE PERMISSION OF UNITRAC RAILROAD MATERIALS INC.

SIGN OFF BLOCK

INITIALS AND DATE ALLOW PROCESS CONTINUATION

CHECK MATERIAL RECEIVED AGAINST PRINT

SAW CUT ENDS MUST BE CUT SQUARE WITHIN 1/16"

RECORD ACTUAL DIMENSIONS FOR 1ST AND LAST PART.

S.O. # _____

	INITIALS	DATE
SAW		
MILL		
STAMPING/ETCHING		
DRILLING		
WELDING		
ASSEMBLY		
PUNCHING		

COMMENTS _____

IF ANY DIMENSION DOES NOT MEET TOLERANCES ON THIS DRAWING STOP PROCESS AND NOTIFY SUPERVISOR

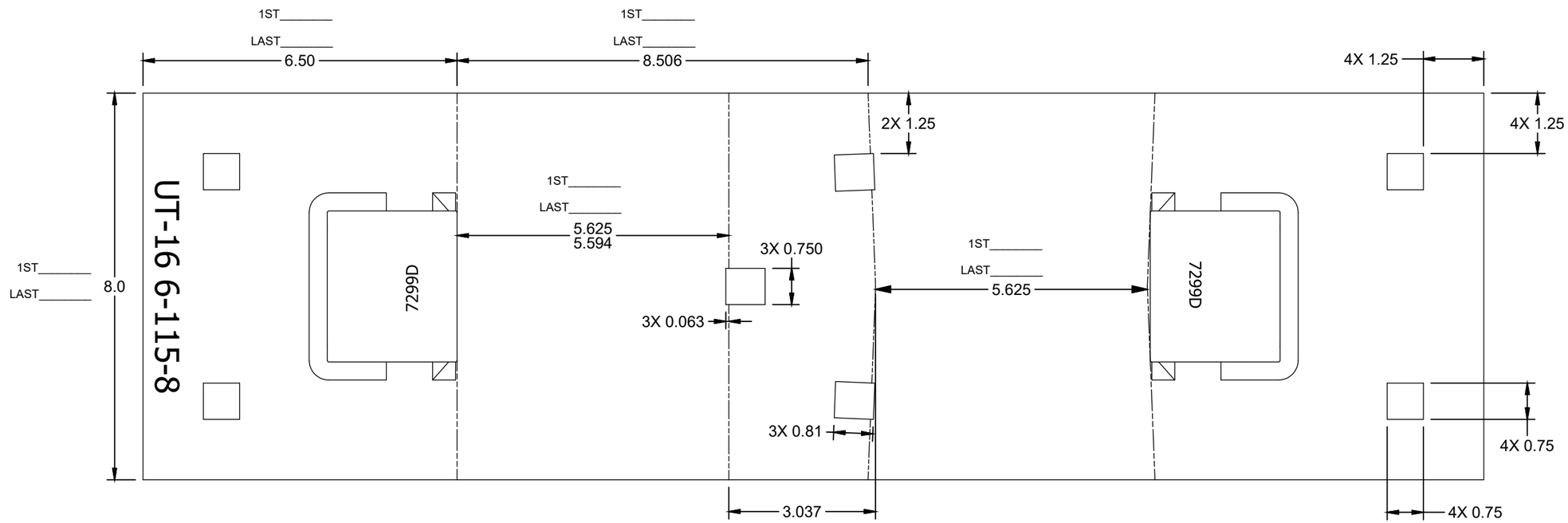

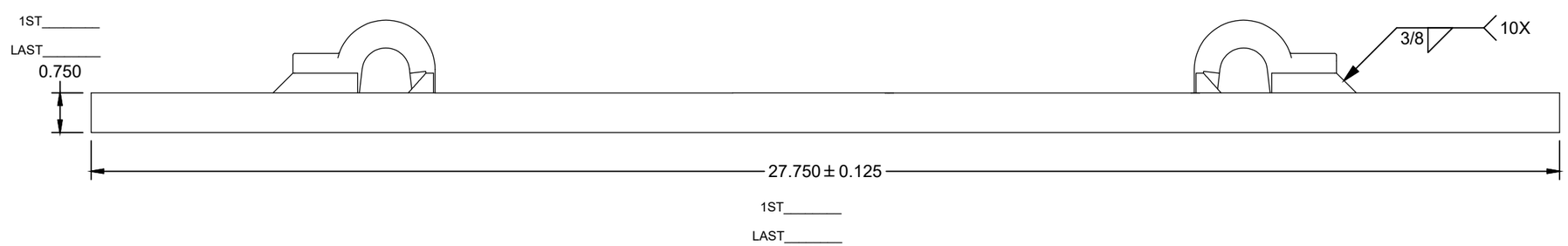

ASSEMBLY - BILL OF MATERIAL

ITEM	QTY	PART NUMBER	DESCRIPTION
1	1	RS075800A36	RAW STOCK_A36_0.750_8.000
2	2	PBN115REWS7299D	PBN_7299_DOMESTIC_FLAT
3	2	PN-PD-ECLIPD	E-CLIP_RH_DOMESTIC

UNLESS OTHERWISE SPECIFIED DIMENSIONS ARE IN INCHES

.X	.XX	.XXX	ANGLE
± .125	± .063	± .031	± 1/4°

DRAWN	S.KENT	2/17/2020
CHECK	C.TAYLOR	2/18/2020
SHEET 1 OF 1	SIZE B	

C:\Unitrac\Plating-Turnout\AREMA\ZTPA3154.idw

UNITRAC RAILROAD MATERIALS, INC.

PO BOX 7098
KNOXVILLE, TN 37921

TITLE
PLATE TO_115RE_8-10_08_PAN_FLAT_SQ_AREA 112 03_MOD-D_DOMESTIC

IN MAS	DRAWING NO.	REV
2/18/2020	ZTPA3154	

THE DOCUMENT AND THE DATA DISCLOSED HERE IN OR HERE WITH IS NOT TO BE REPRODUCED, USED, OR DISCLOSED IN WHOLE OR IN PART TO ANYONE WITHOUT THE PERMISSION OF UNITRAC RAILROAD MATERIALS INC.

SIGN OFF BLOCK

INITIALS AND DATE ALLOW PROCESS CONTINUATION

CHECK MATERIAL RECEIVED AGAINST PRINT

SAW CUT ENDS MUST BE CUT SQUARE WITHIN 1/16"

RECORD ACTUAL DIMENSIONS FOR 1ST AND LAST PART.

S.O. # _____

	INITIALS	DATE
SAW		
MILL		
STAMPING/ETCHING		
DRILLING		
WELDING		
ASSEMBLY		
PUNCHING		

COMMENTS _____

IF ANY DIMENSION DOES NOT MEET TOLERANCES ON THIS DRAWING STOP PROCESS AND NOTIFY SUPERVISOR

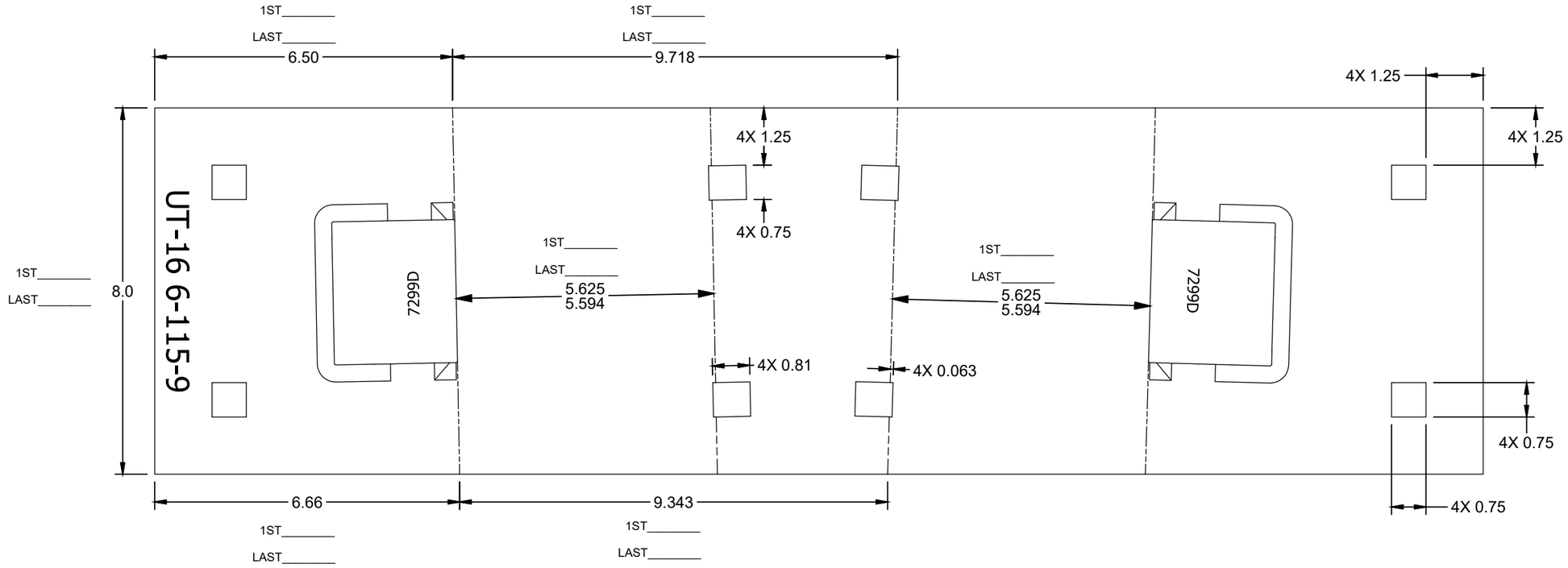

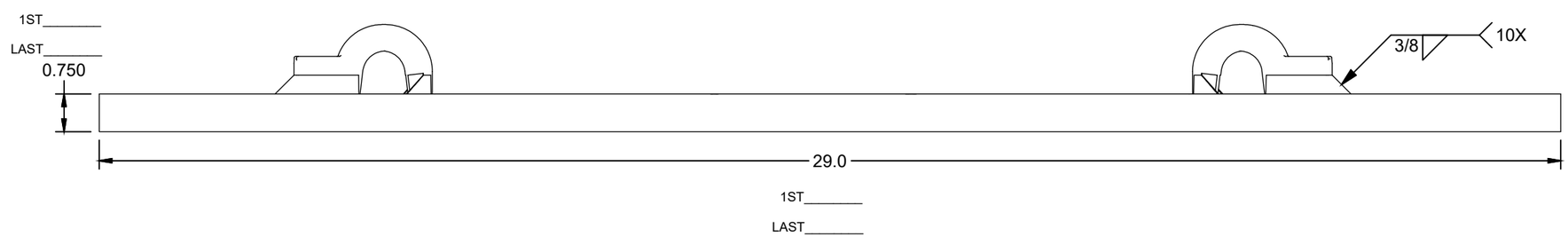

ASSEMBLY - BILL OF MATERIAL

ITEM	QTY	PART NUMBER	DESCRIPTION
1	1	RS075800A36	RAW STOCK_A36_0.750_8.000
2	2	PBN115REWS7299D	PBN_7299_DOMESTIC_FLAT
3	2	PN-PD-ECLIPD	E-CLIP_RH_DOMESTIC

UNLESS OTHERWISE SPECIFIED DIMENSIONS ARE IN INCHES

.X	.XX	.XXX	ANGLE
± .125	± .063	± .031	± 1/4°

DRAWN	S.KENT	2/17/2020
CHECK	C.TAYLOR	2/18/2020
SHEET 1 OF 1	SIZE B	

C:\Unitrac\Plating-Turnout\AREMA\ZTPA3155.idw

UNITRAC RAILROAD MATERIALS, INC.

PO BOX 7098
KNOXVILLE, TN 37921

TITLE
PLATE TO_115RE_8-10_09_PAN_FLAT_SQ_AREA 112 03_MOD-D_DOMESTIC

IN MAS	DRAWING NO.	REV
2/18/2020	ZTPA3155	

THE DOCUMENT AND THE DATA DISCLOSED HERE IN OR HERE WITH IS NOT TO BE REPRODUCED, USED, OR DISCLOSED IN WHOLE OR IN PART TO ANYONE WITHOUT THE PERMISSION OF UNITRAC RAILROAD MATERIALS INC.

SIGN OFF BLOCK

INITIALS AND DATE ALLOW PROCESS CONTINUATION

CHECK MATERIAL RECEIVED AGAINST PRINT

SAW CUT ENDS MUST BE CUT SQUARE WITHIN 1/16"

RECORD ACTUAL DIMENSIONS FOR 1ST AND LAST PART.

S.O. # _____

	INITIALS	DATE
SAW		
MILL		
STAMPING/ETCHING		
DRILLING		
WELDING		
ASSEMBLY		
PUNCHING		

COMMENTS _____

IF ANY DIMENSION DOES NOT MEET TOLERANCES ON THIS DRAWING STOP PROCESS AND NOTIFY SUPERVISOR

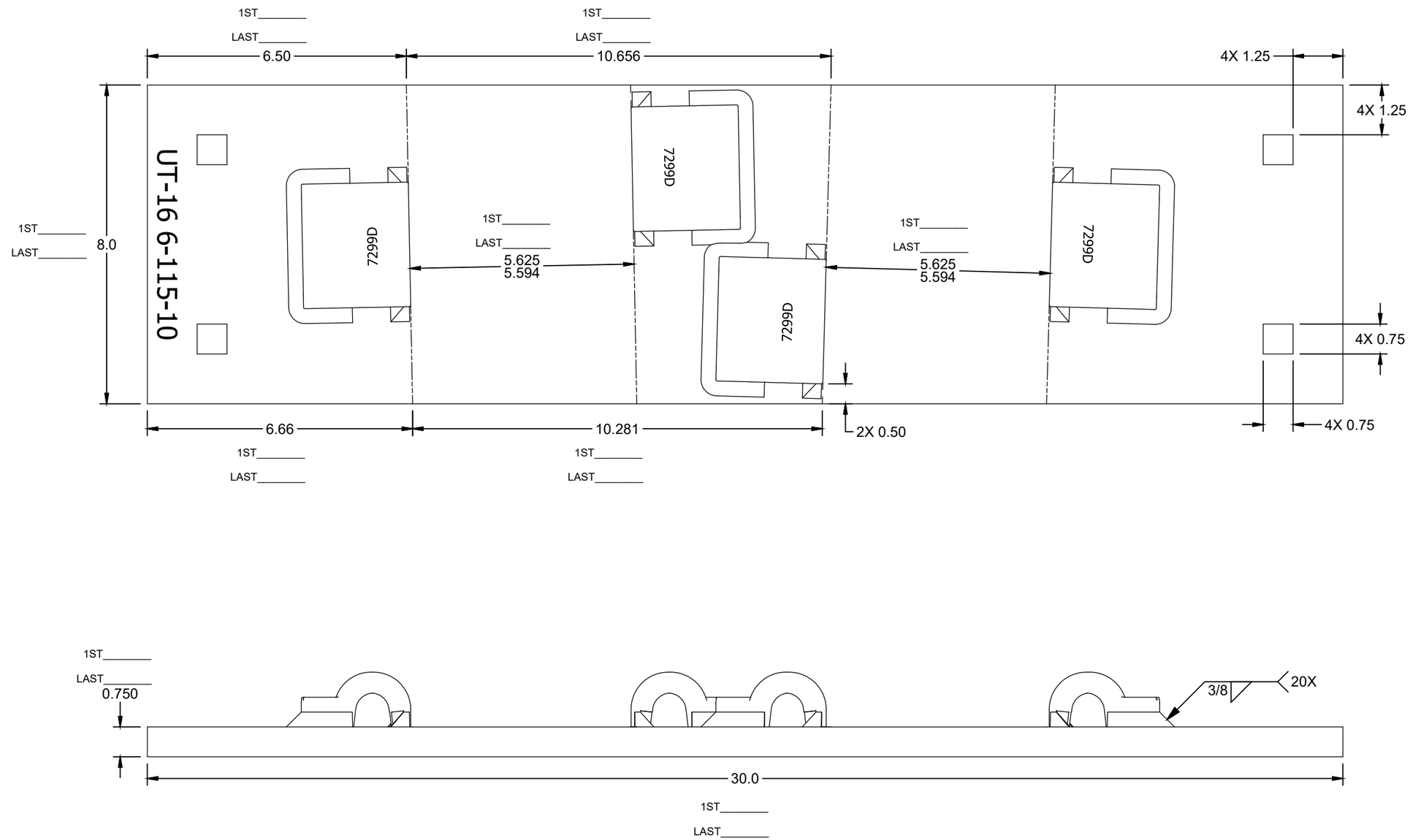

ASSEMBLY - BILL OF MATERIAL

ITEM	QTY	PART NUMBER	DESCRIPTION
1	1	RS075800A36	RAW STOCK_A36_0.750_8.000
2	4	PBN115REWS7299D	PBN_7299_DOMESTIC_FLAT
3	4	PN-PD-ECLIPD	E-CLIP_RH_DOMESTIC

UNLESS OTHERWISE SPECIFIED DIMENSIONS ARE IN INCHES

.X	.XX	.XXX	ANGLE
± .125	± .063	± .031	± 1/4°

DRAWN	S.KENT	2/17/2020
CHECK	C.TAYLOR	2/18/2020
SHEET 1 OF 1	SIZE B	

C:\Unitrac\Plating-Turnout\AREMA\ZTPA3156.idw

UNITRAC RAILROAD MATERIALS, INC.

PO BOX 7098
KNOXVILLE, TN 37921

TITLE
PLATE TO_115RE_8-10_10_PAN_FLAT_SQ_AREA 112 03_MOD-D_DOMESTIC

IN MAS	DRAWING NO.	REV
2/18/2020	ZTPA3156	

THE DOCUMENT AND THE DATA DISCLOSED HERE IN OR HERE WITH IS NOT TO BE REPRODUCED, USED, OR DISCLOSED IN WHOLE OR IN PART TO ANYONE WITHOUT THE PERMISSION OF UNITRAC RAILROAD MATERIALS INC.

SIGN OFF BLOCK

INITIALS AND DATE ALLOW PROCESS CONTINUATION

CHECK MATERIAL RECEIVED AGAINST PRINT

SAW CUT ENDS MUST BE CUT SQUARE WITHIN 1/16"

RECORD ACTUAL DIMENSIONS FOR 1ST AND LAST PART.

S.O. # _____

	INITIALS	DATE
SAW		
MILL		
STAMPING/ETCHING		
DRILLING		
WELDING		
ASSEMBLY		
PUNCHING		

COMMENTS _____

IF ANY DIMENSION DOES NOT MEET TOLERANCES ON THIS DRAWING STOP PROCESS AND NOTIFY SUPERVISOR

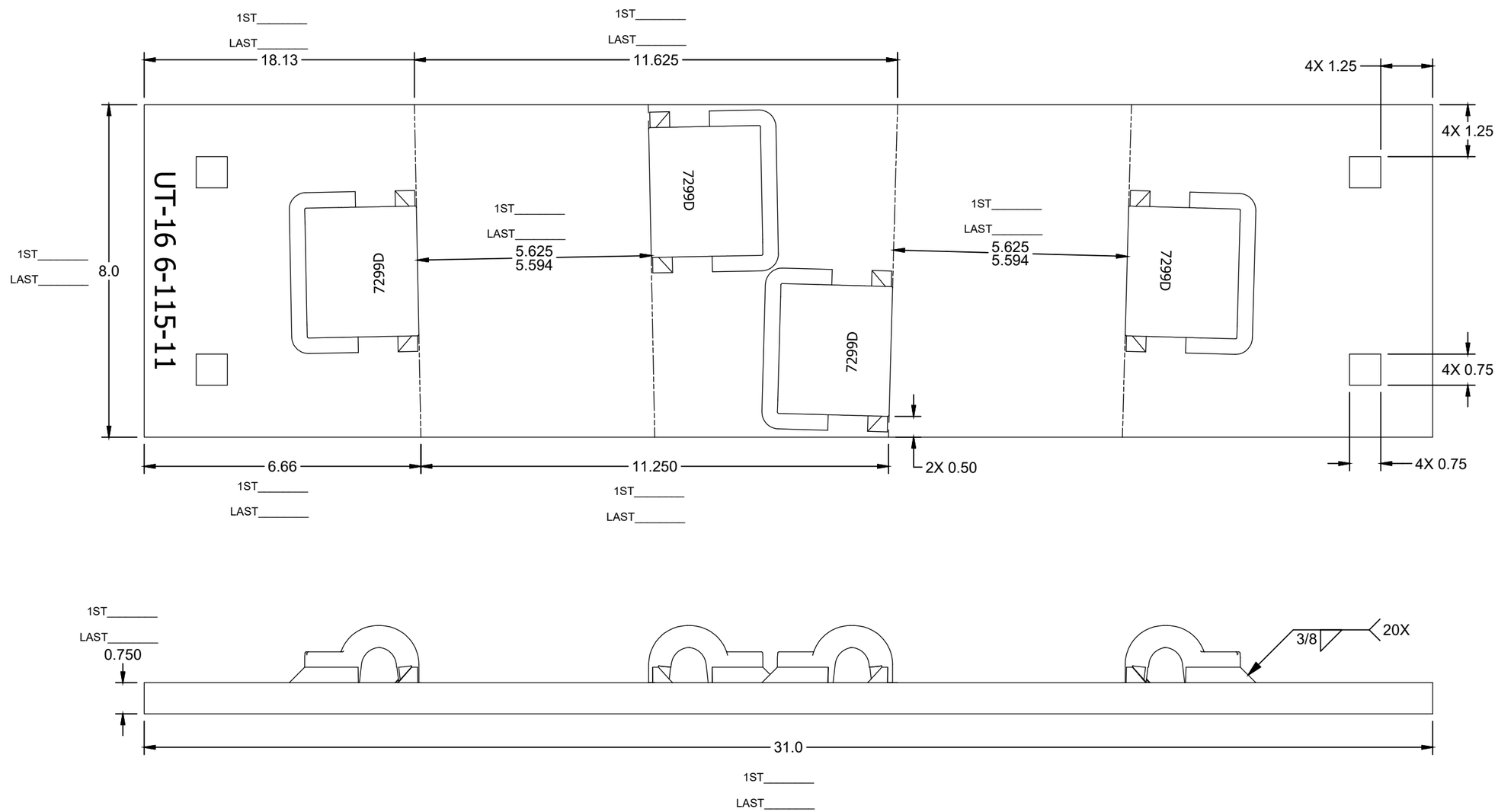

ASSEMBLY - BILL OF MATERIAL

ITEM	QTY	PART NUMBER	DESCRIPTION
1	1	RS075800A36	RAW STOCK_A36_0.750_8.000
2	4	PBN115REWS7299D	PBN_7299_DOMESTIC_FLAT
3	4	PN-PD-ECLIPD	E-CLIP_RH_DOMESTIC

UNLESS OTHERWISE SPECIFIED DIMENSIONS ARE IN INCHES

.X	.XX	.XXX	ANGLE
± .125	± .063	± .031	± 1/4°

DRAWN	S.KENT	2/17/2020
CHECK	C.TAYLOR	2/18/2020
SHEET 1 OF 1	SIZE B	

C:\Unitrac\Plating-Turnout\AREMA\ZTPA3157.idw

UNITRAC RAILROAD MATERIALS, INC.

PO BOX 7098
KNOXVILLE, TN 37921

TITLE
PLATE TO_115RE_8-10_11_PAN_FLAT_SQ_AREA 112 03_MOD-D_DOMESTIC

IN MAS	DRAWING NO.	REV
2/18/2020	ZTPA3157	

THE DOCUMENT AND THE DATA DISCLOSED HERE IN OR HERE WITH IS NOT TO BE REPRODUCED, USED, OR DISCLOSED IN WHOLE OR IN PART TO ANYONE WITHOUT THE PERMISSION OF UNITRAC RAILROAD MATERIALS INC.

SIGN OFF BLOCK

INITIALS AND DATE ALLOW PROCESS CONTINUATION

CHECK MATERIAL RECEIVED AGAINST PRINT

SAW CUT ENDS MUST BE CUT SQUARE WITHIN 1/16"

RECORD ACTUAL DIMENSIONS FOR 1ST AND LAST PART.

S.O. # _____

	INITIALS	DATE
SAW		
MILL		
STAMPING/ETCHING		
DRILLING		
WELDING		
ASSEMBLY		
PUNCHING		

COMMENTS _____

IF ANY DIMENSION DOES NOT MEET TOLERANCES ON THIS DRAWING STOP PROCESS AND NOTIFY SUPERVISOR

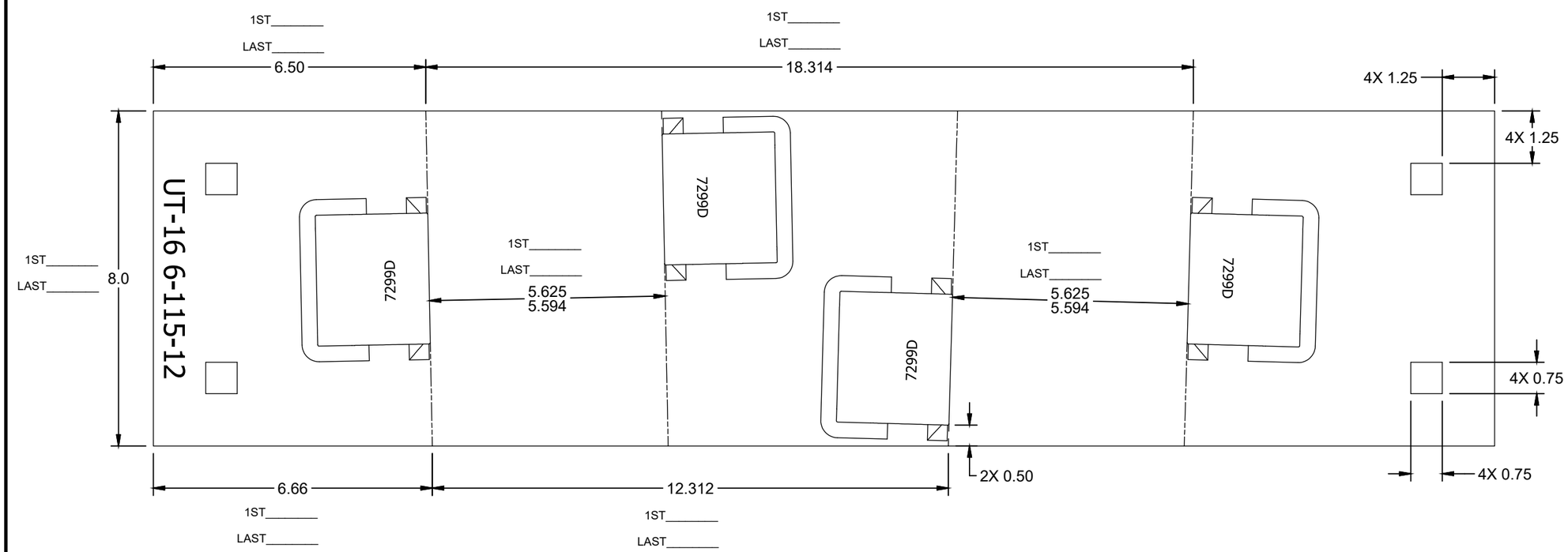

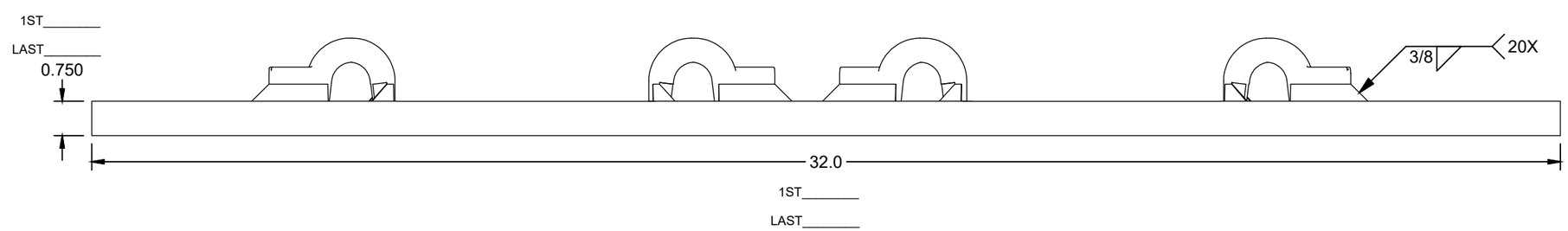

ASSEMBLY - BILL OF MATERIAL

ITEM	QTY	PART NUMBER	DESCRIPTION
1	1	RS075800A36	RAW STOCK_A36_0.750_8.000
2	4	PBN115REWS7299D	PBN_7299_DOMESTIC_FLAT
3	4	PN-PD-ECLIPD	E-CLIP_RH_DOMESTIC

UNLESS OTHERWISE SPECIFIED DIMENSIONS ARE IN INCHES

.X	.XX	.XXX	ANGLE
± .125	± .063	± .031	± 1/4°

DRAWN	S.KENT	2/17/2020
CHECK	C.TAYLOR	2/18/2020
SHEET 1 OF 1	SIZE B	

C:\Unitrac\Plating-Turnout\AREMA\ZTPA3158.idw

UNITRAC RAILROAD MATERIALS, INC.

PO BOX 7098
KNOXVILLE, TN 37921

TITLE
PLATE TO_115RE_8-10_12_PAN_FLAT_SQ_AREA 112 03_MOD-D_DOMESTIC

IN MAS	DRAWING NO.	REV
2/18/2020	ZTPA3158	

THE DOCUMENT AND THE DATA DISCLOSED HERE IN OR HERE WITH IS NOT TO BE REPRODUCED, USED, OR DISCLOSED IN WHOLE OR IN PART TO ANYONE WITHOUT THE PERMISSION OF UNITRAC RAILROAD MATERIALS INC.

SIGN OFF BLOCK

INITIALS AND DATE ALLOW PROCESS CONTINUATION

CHECK MATERIAL RECEIVED AGAINST PRINT

SAW CUT ENDS MUST BE CUT SQUARE WITHIN 1/16"

RECORD ACTUAL DIMENSIONS FOR 1ST AND LAST PART.

S.O. # _____

	INITIALS	DATE
SAW		
MILL		
STAMPING/ETCHING		
DRILLING		
WELDING		
ASSEMBLY		
PUNCHING		

COMMENTS _____

IF ANY DIMENSION DOES NOT MEET TOLERANCES ON THIS DRAWING STOP PROCESS AND NOTIFY SUPERVISOR

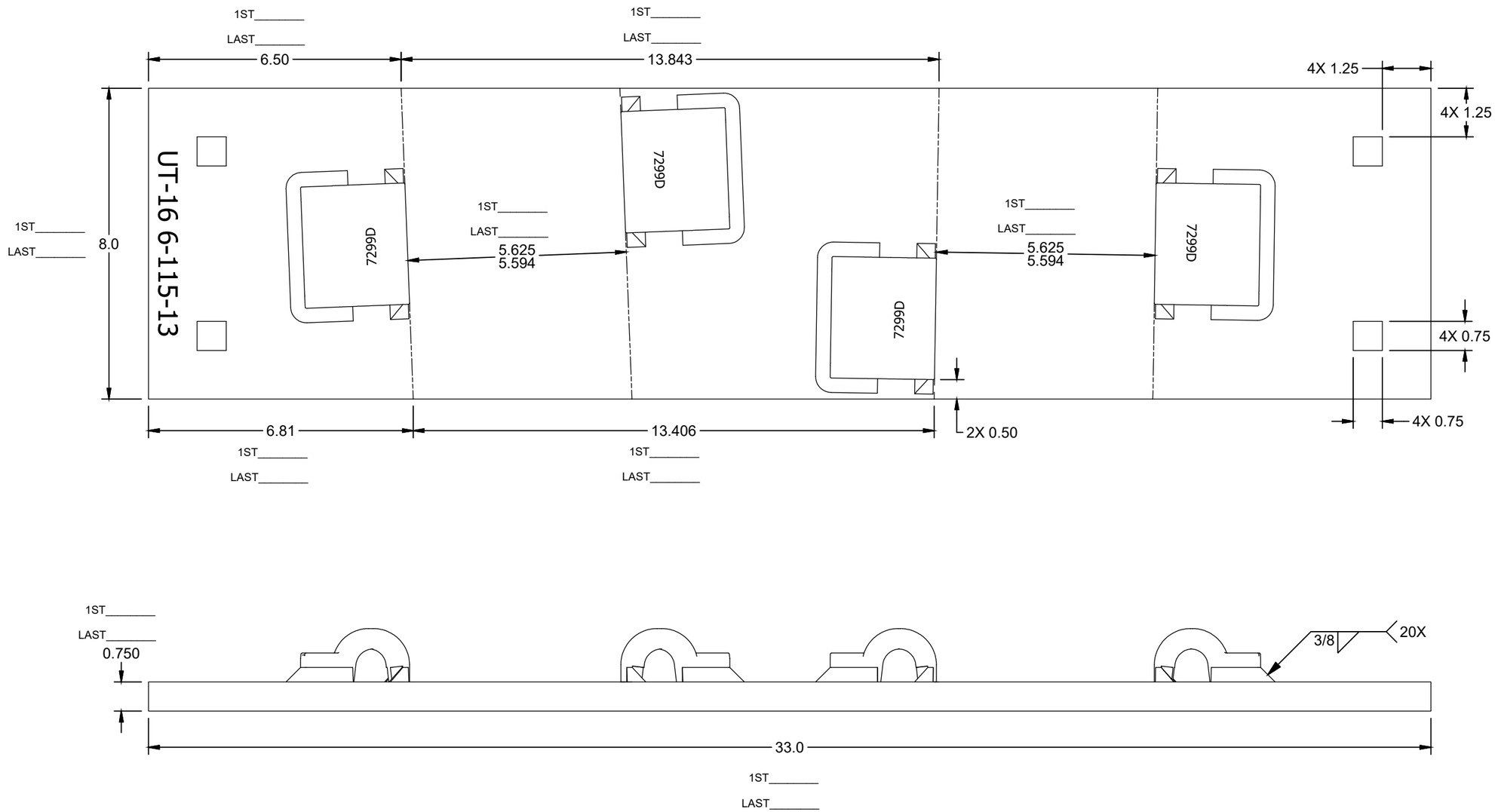

ASSEMBLY - BILL OF MATERIAL			
ITEM	QTY	PART NUMBER	DESCRIPTION
1	1	RS075800A36	RAW STOCK_A36_0.750_8.000
2	4	PBN115REWS7299D	PBN_7299_DOMESTIC_FLAT
3	4	PN-PD-ECLIPD	E-CLIP_RH_DOMESTIC

UNLESS OTHERWISE SPECIFIED DIMENSIONS ARE IN INCHES

.X	.XX	.XXX	ANGLE
± .125	± .063	± .031	± 1/4°

DRAWN	S.KENT	2/17/2020
CHECK	C.TAYLOR	2/18/2020
SHEET 1 OF 1	SIZE B	

C:\Unitrac\Plating-Turnout\AREMA\ZTPA3159.idw

UNITRAC RAILROAD MATERIALS, INC.
PO BOX 7098
KNOXVILLE, TN 37921

TITLE
PLATE TO_115RE_8-10_13_PAN_FLAT_SQ_AREA 112 03_MOD-D_DOMESTIC

IN MAS	DRAWING NO.	REV
2/18/2020	ZTPA3159	

THE DOCUMENT AND THE DATA DISCLOSED HERE IN OR HERE WITH IS NOT TO BE REPRODUCED, USED, OR DISCLOSED IN WHOLE OR IN PART TO ANYONE WITHOUT THE PERMISSION OF UNITRAC RAILROAD MATERIALS INC.

SIGN OFF BLOCK

INITIALS AND DATE ALLOW PROCESS CONTINUATION

CHECK MATERIAL RECEIVED AGAINST PRINT

SAW CUT ENDS MUST BE CUT SQUARE WITHIN 1/16"

RECORD ACTUAL DIMENSIONS FOR 1ST AND LAST PART.

S.O. # _____

	INITIALS	DATE
SAW		
MILL		
STAMPING/ETCHING		
DRILLING		
WELDING		
ASSEMBLY		
PUNCHING		

COMMENTS _____

IF ANY DIMENSION DOES NOT MEET TOLERANCES ON THIS DRAWING STOP PROCESS AND NOTIFY SUPERVISOR

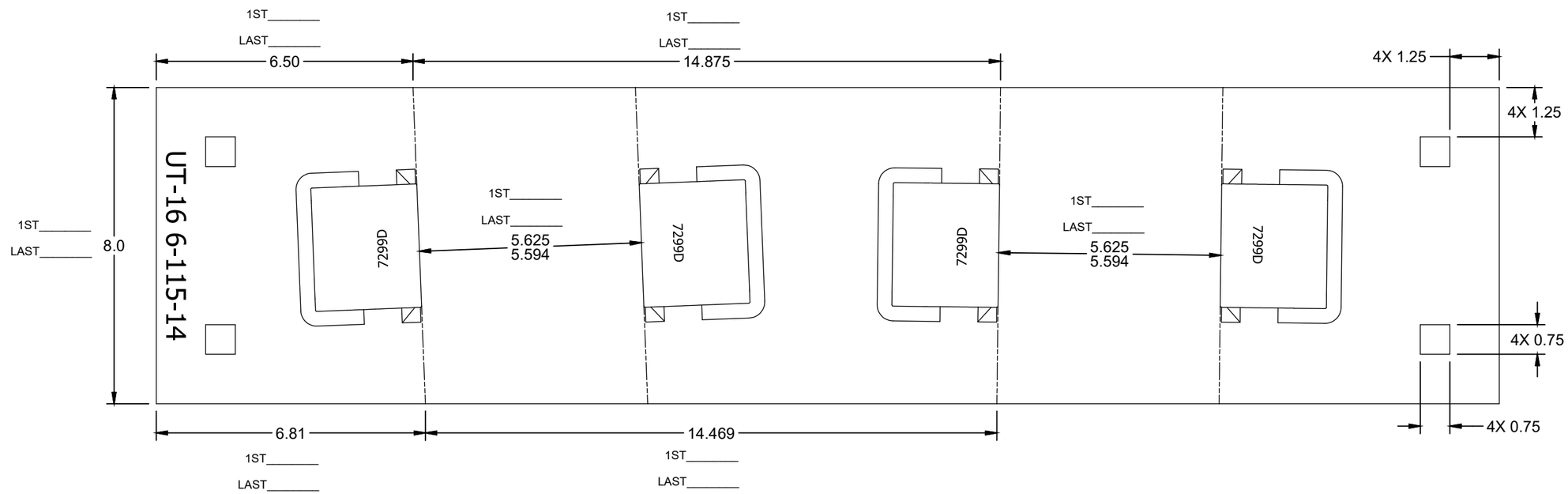

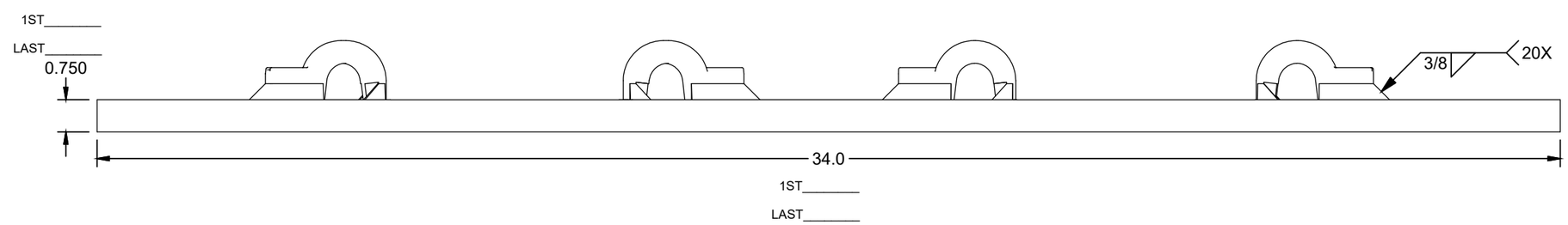

ASSEMBLY - BILL OF MATERIAL

ITEM	QTY	PART NUMBER	DESCRIPTION
1	1	RS075800A36	RAW STOCK_A36_0.750_8.000
2	4	PBN115REWS7299D	PBN_7299_DOMESTIC_FLAT
3	4	PN-PD-ECLIPD	E-CLIP_RH_DOMESTIC

UNLESS OTHERWISE SPECIFIED DIMENSIONS ARE IN INCHES

.X	.XX	.XXX	ANGLE
± .125	± .063	± .031	± 1/4°

DRAWN	S.KENT	2/17/2020
CHECK	C.TAYLOR	2/18/2020
SHEET 1 OF 1	SIZE B	

C:\Unitrac\Plating-Turnout\AREMA\ZTPA3160.idw

UNITRAC RAILROAD MATERIALS, INC.

PO BOX 7098
KNOXVILLE, TN 37921

TITLE
PLATE TO_115RE_8-10_14_PAN_FLAT_SQ_AREA 112 03_MOD-D_DOMESTIC

IN MAS	DRAWING NO.	REV
2/18/2020	ZTPA3160	

THE DOCUMENT AND THE DATA DISCLOSED HERE IN OR HERE WITH IS NOT TO BE REPRODUCED, USED, OR DISCLOSED IN WHOLE OR IN PART TO ANYONE WITHOUT THE PERMISSION OF UNITRAC RAILROAD MATERIALS INC.

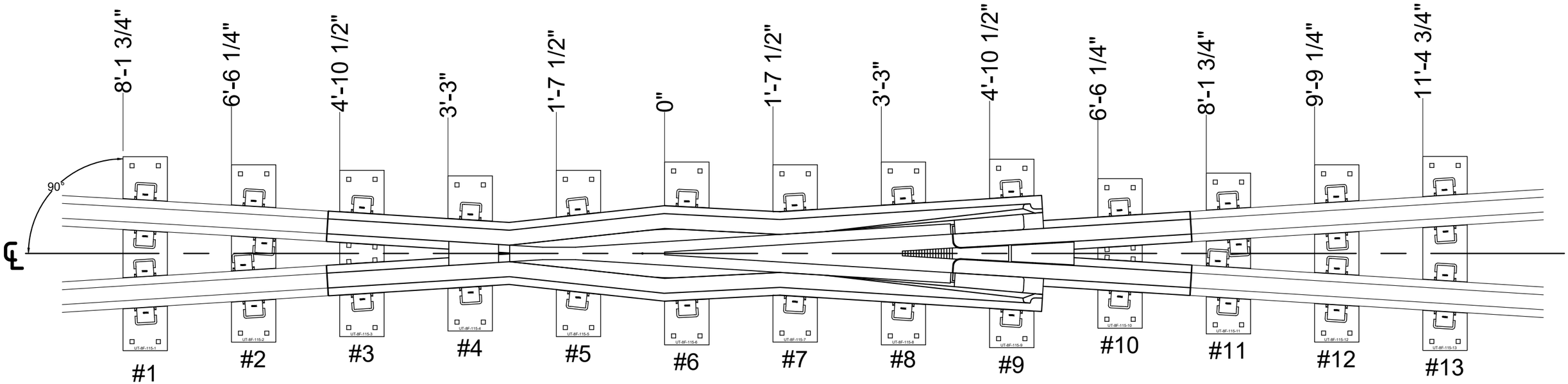

Parts List			
ITEM	QTY	PART NUMBER	DESCRIPTION
1	1	FPA3760	PLATE FROG RBMI_115RE_08_01_PAN_FLAT_SQ_AREA 623 03_MOD-D_DOMESTIC
2	1	FPA3761	PLATE FROG RBMI_115RE_08_02_PAN_FLAT_SQ_AREA 623 03_MOD-D_DOMESTIC
3	1	FPA3762	PLATE FROG RBMI_115RE_08_03_PAN_FLAT_SQ_AREA 623 03_MOD-D_DOMESTIC
4	1	FPA3763	PLATE FROG RBMI_115RE_08_04_PAN_FLAT_SQ_AREA 623 03_MOD-D_DOMESTIC
5	1	FPA3764	PLATE FROG RBMI_115RE_08_05_PAN_FLAT_SQ_AREA 623 03_MOD-D_DOMESTIC
6	1	FPA3765	PLATE FROG RBMI_115RE_08_06_PAN_FLAT_SQ_AREA 623 03_MOD-D_DOMESTIC
7	1	FPA3766	PLATE FROG RBMI_115RE_08_07_PAN_FLAT_SQ_AREA 623 03_MOD-D_DOMESTIC
8	1	FPA3767	PLATE FROG RBMI_115RE_08_08_PAN_FLAT_SQ_AREA 623 03_MOD-D_DOMESTIC
9	1	FPA3768	PLATE FROG RBMI_115RE_08_09_PAN_FLAT_SQ_AREA 623 03_MOD-D_DOMESTIC
10	1	FPA3769	PLATE FROG RBMI_115RE_08_10_PAN_FLAT_SQ_AREA 623 03_MOD-D_DOMESTIC
11	1	FPA3770	PLATE FROG RBMI_115RE_08_11_PAN_FLAT_SQ_AREA 623 03_MOD-D_DOMESTIC
12	1	FPA3771	PLATE FROG RBMI_115RE_08_12_PAN_FLAT_SQ_AREA 623 03_MOD-D_DOMESTIC
13	1	FPA3772	PLATE FROG RBMI_115RE_08_13_PAN_FLAT_SQ_AREA 623 03_MOD-D_DOMESTIC

NOTES:
1. MARK EACH PLATE LOCATION PER PWI-06-009
2. PLATES TO BE PERPENDICULAR TO CENTER LINE OF FROG

UNLESS OTHERWISE SPECIFIED DIMENSIONS ARE IN INCHES

.X	.XX	.XXX	ANGLE

DRAWN	S.RAKESH	08/23/2019
CHECK	S.KENT	08/28/2019
SHEET 1 OF 1	SIZE B	

C:\UNITRAC\FROG LAYOUTS\FPP1166

UNITRAC RAILROAD MATERIALS
PO BOX 7098
KNOXVILLE, TN 37921

TITLE: PLATE PACK FROG RBMI_115RE_08_UNIV_PAN_FLAT_SQ_AREA 623 03_MOD-D_DOMESTIC

IN MAS	DRAWING NO.	REV
08/28/2019	FPP1166	----

THE DOCUMENT AND THE DATA DISCLOSED HERE IN OR HERE WITH IS NOT TO BE REPRODUCED, USED, OR DISCLOSED IN WHOLE OR IN PART TO ANYONE WITHOUT THE PERMISSION OF UNITRAC RAILROAD MATERIALS INC.

SIGN OFF BLOCK

INITIALS AND DATE ALLOW PROCESS CONTINUATION

CHECK MATERIAL RECEIVED AGAINST PRINT

SAW CUT ENDS MUST BE CUT SQUARE WITHIN 1/16"

RECORD ACTUAL DIMENSIONS FOR 1ST AND LAST PART.

S.O. # _____

	INITIALS	DATE
SAW		
MILL		
STAMPING/ETCHING		
DRILLING		
WELDING		
ASSEMBLY		
PUNCHING		

COMMENTS _____

IF ANY DIMENSION DOES NOT MEET TOLERANCES ON THIS DRAWING STOP PROCESS AND NOTIFY SUPERVISOR

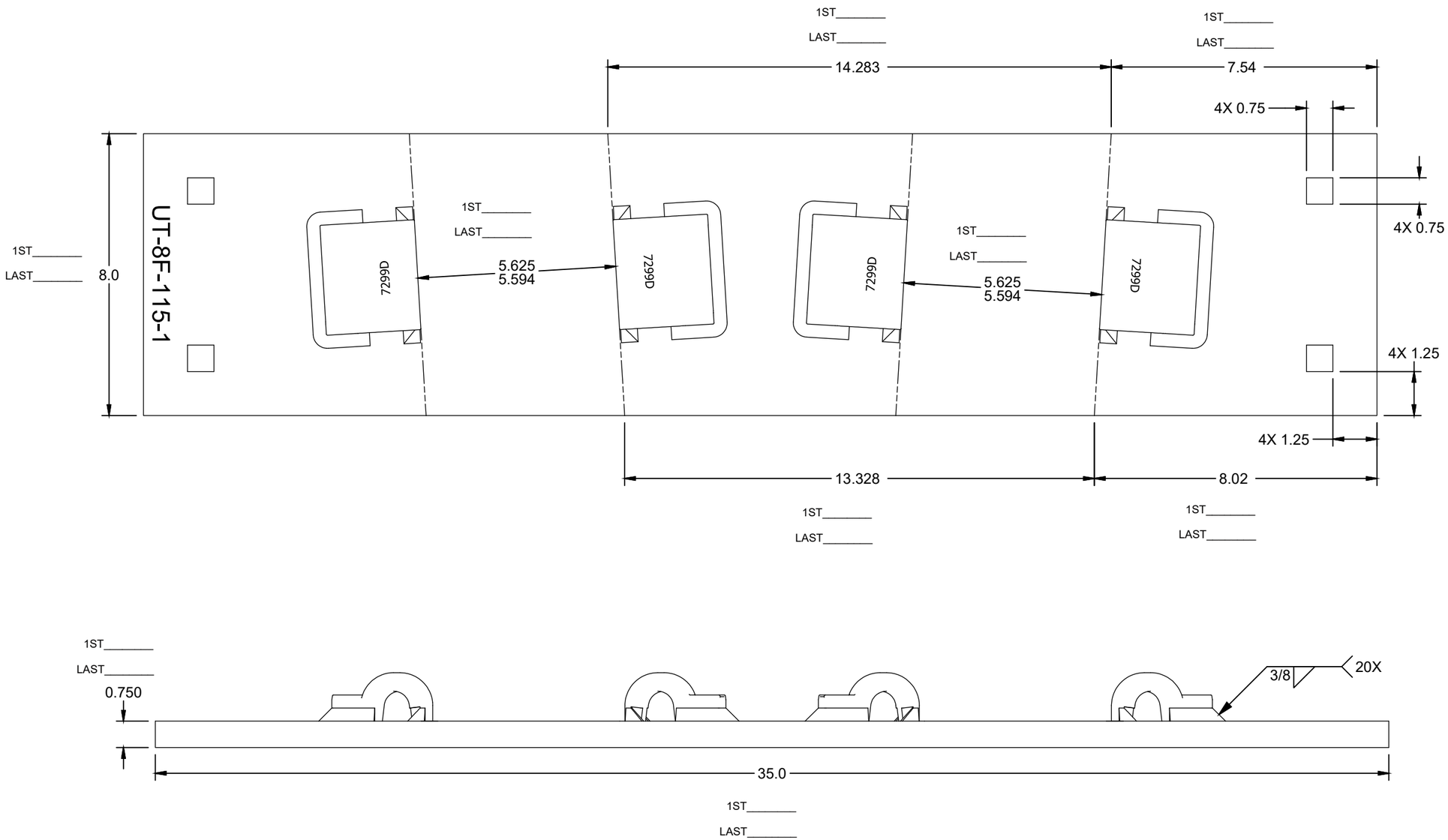

ASSEMBLY - BILL OF MATERIAL			
ITEM	QTY	PART NUMBER	DESCRIPTION
1	1	RS075800A36	RAW STOCK_A36_0.750_8.000
2	4	PBN115REWS7299D	PBN_7299_DOMESTIC_FLAT
3	4	PN-PD-ECLIPD	E-CLIP_RH_DOMESTIC

UNLESS OTHERWISE SPECIFIED DIMENSIONS ARE IN INCHES

.X	.XX	.XXX	ANGLE
± .125	± .063	± .031	± 1/4°

DRAWN	S.RAKESH	8/20/2019
CHECK	S.KENT	8/28/2019
SHEET 1 OF 1	SIZE B	

C:\Unitrac\Plating-Frog\#08\FPA3760.idw

UNITRAC RAILROAD MATERIALS
PO BOX 7098
KNOXVILLE, TN 37921

TITLE
PLATE FROG RBMI_115RE_08_01_PAN_FLAT_SQ_AREA 623
03_MOD-D_DOMESTIC

IN MAS	DRAWING NO.	REV
8/28/2019	FPA3760	

THE DOCUMENT AND THE DATA DISCLOSED HERE IN OR HERE WITH IS NOT TO BE REPRODUCED, USED, OR DISCLOSED IN WHOLE OR IN PART TO ANYONE WITHOUT THE PERMISSION OF UNITRAC RAILROAD MATERIALS INC.

SIGN OFF BLOCK

INITIALS AND DATE ALLOW PROCESS CONTINUATION

CHECK MATERIAL RECEIVED AGAINST PRINT

SAW CUT ENDS MUST BE CUT SQUARE WITHIN 1/16"

RECORD ACTUAL DIMENSIONS FOR 1ST AND LAST PART.

S.O. # _____

	INITIALS	DATE
SAW		
MILL		
STAMPING/ETCHING		
DRILLING		
WELDING		
ASSEMBLY		
PUNCHING		

COMMENTS _____

IF ANY DIMENSION DOES NOT MEET TOLERANCES ON THIS DRAWING STOP PROCESS AND NOTIFY SUPERVISOR

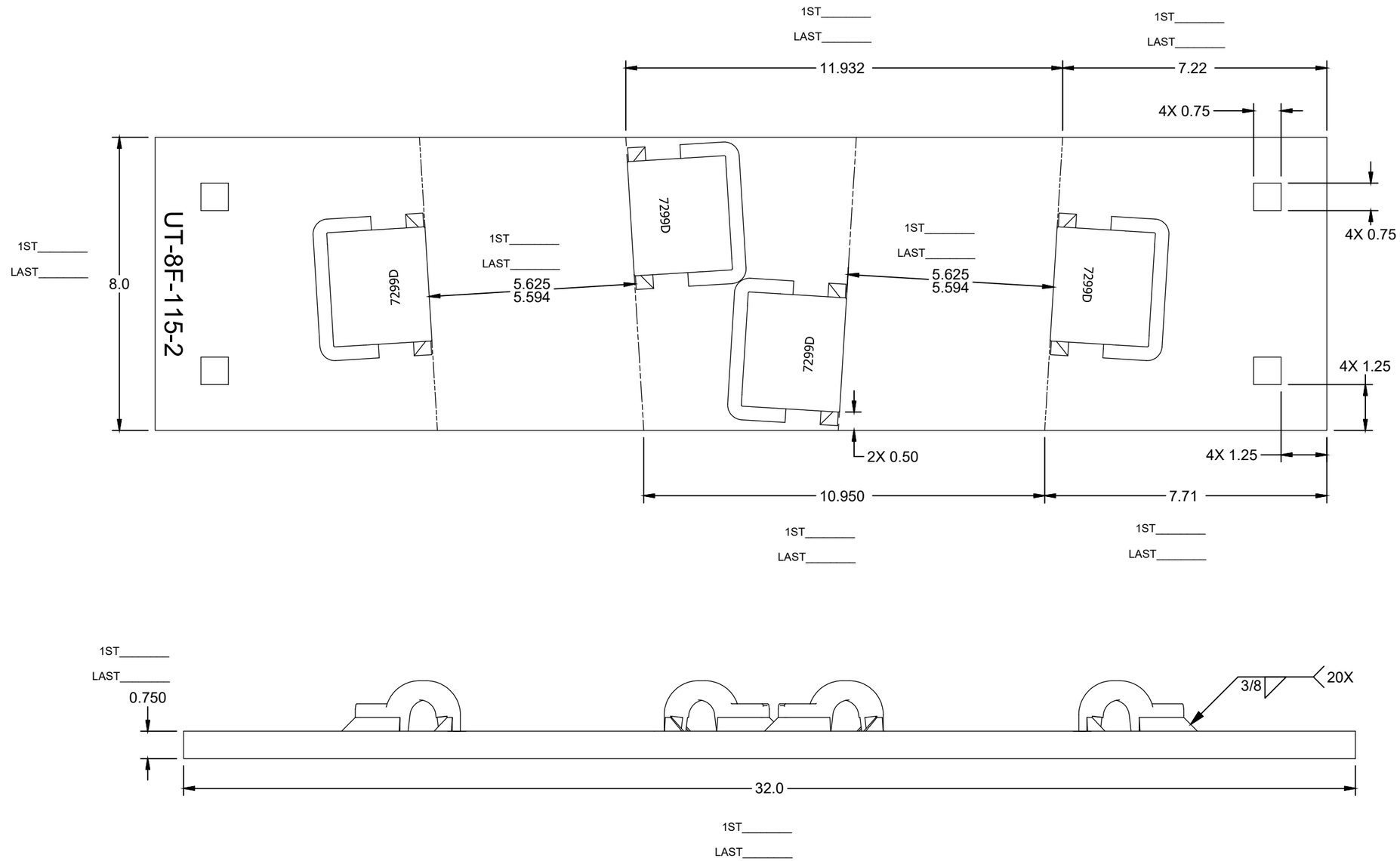

ASSEMBLY - BILL OF MATERIAL

ITEM	QTY	PART NUMBER	DESCRIPTION
1	1	RS075800A36	RAW STOCK_A36_0.750_8.000
2	4	PBN115REWS7299D	PBN_7299_DOMESTIC_FLAT
3	4	PN-PD-ECLIPD	E-CLIP_RH_DOMESTIC

UNLESS OTHERWISE SPECIFIED DIMENSIONS ARE IN INCHES

.X	.XX	.XXX	ANGLE
± .125	± .063	± .031	± 1/4°

DRAWN	S.RAKESH	8/20/2019
CHECK	S.KENT	8/28/2019
SHEET 1 OF 1	SIZE B	

C:\Unitrac\Plating-Frog\#08\FPA3761.idw

UNITRAC RAILROAD MATERIALS
PO BOX 7098
KNOXVILLE, TN 37921

TITLE
PLATE FROG RBMI_115RE_08_02_PAN_FLAT_SQ_AREA 623 03_MOD-D_DOMESTIC

IN MAS	DRAWING NO.	REV
8/28/2019	FPA3761	

THE DOCUMENT AND THE DATA DISCLOSED HERE IN OR HERE WITH IS NOT TO BE REPRODUCED, USED, OR DISCLOSED IN WHOLE OR IN PART TO ANYONE WITHOUT THE PERMISSION OF UNITRAC RAILROAD MATERIALS INC.

SIGN OFF BLOCK

INITIALS AND DATE ALLOW PROCESS CONTINUATION

CHECK MATERIAL RECEIVED AGAINST PRINT

SAW CUT ENDS MUST BE CUT SQUARE WITHIN 1/16"

RECORD ACTUAL DIMENSIONS FOR 1ST AND LAST PART.

S.O. # _____

	INITIALS	DATE
SAW		
MILL		
STAMPING/ETCHING		
DRILLING		
WELDING		
ASSEMBLY		
PUNCHING		

COMMENTS _____

IF ANY DIMENSION DOES NOT MEET TOLERANCES ON THIS DRAWING STOP PROCESS AND NOTIFY SUPERVISOR

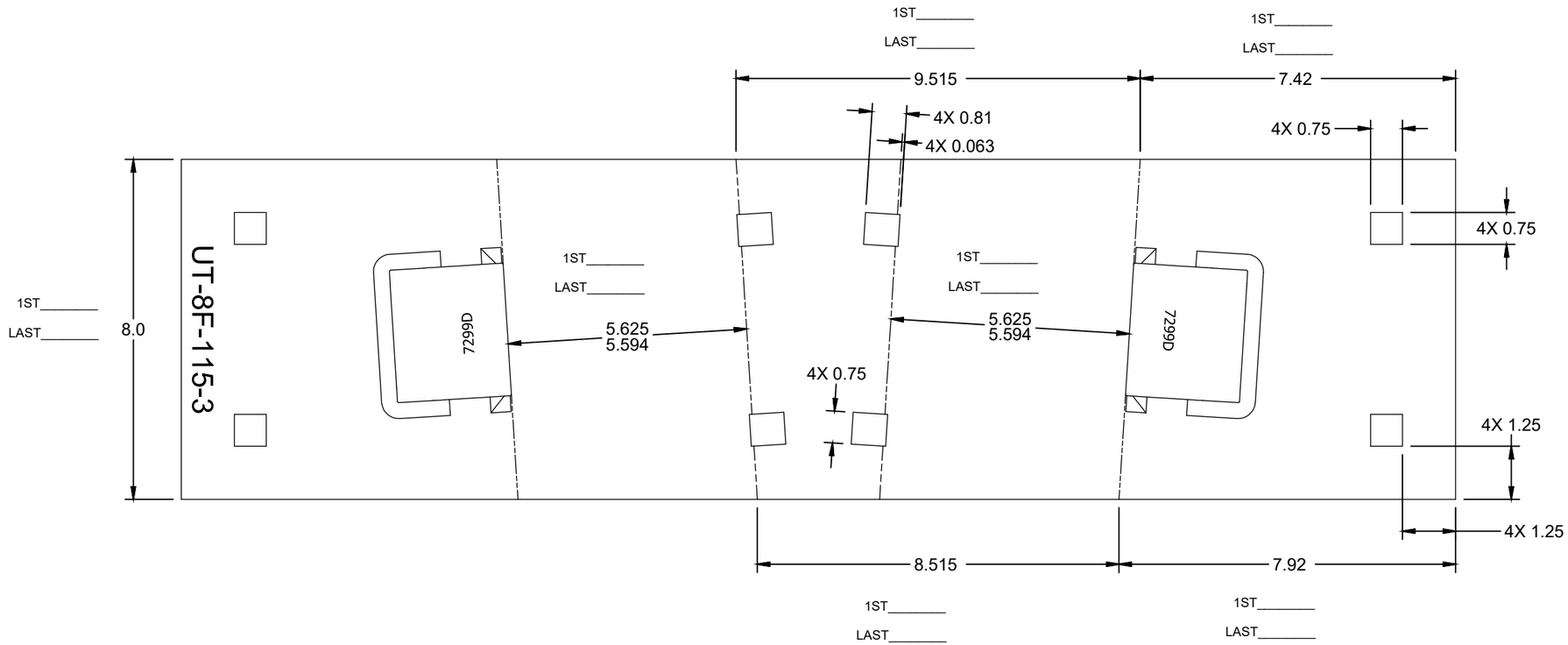

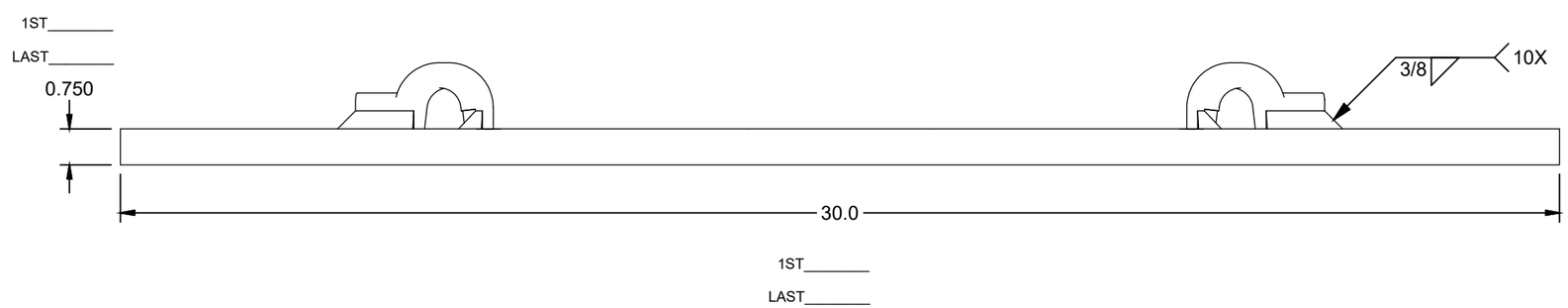

ASSEMBLY - BILL OF MATERIAL

ITEM	QTY	PART NUMBER	DESCRIPTION
1	1	RS075800A36	RAW STOCK_A36_0.750_8.000
2	2	PBN115REWS7299D	PBN_7299_DOMESTIC_FLAT
3	2	PN-PD-ECLIPD	E-CLIP_RH_DOMESTIC

UNLESS OTHERWISE SPECIFIED DIMENSIONS ARE IN INCHES

.X	.XX	.XXX	ANGLE
± .125	± .063	± .031	± 1/4°

DRAWN	S.RAKESH	8/20/2019
CHECK	S.KENT	8/28/2019
SHEET 1 OF 1	SIZE B	

C:\Unitrac\Plating-Frog\#08\FPA3762.idw

UNITRAC RAILROAD MATERIALS
PO BOX 7098
KNOXVILLE, TN 37921

TITLE
PLATE FROG RBMI_115RE_08_03_PAN_FLAT_SQ_AREA 623 03_MOD-D_DOMESTIC

IN MAS	DRAWING NO.	REV
08/28/2019	FPA3762	

THE DOCUMENT AND THE DATA DISCLOSED HERE IN OR HERE WITH IS NOT TO BE REPRODUCED, USED, OR DISCLOSED IN WHOLE OR IN PART TO ANYONE WITHOUT THE PERMISSION OF UNITRAC RAILROAD MATERIALS INC.

SIGN OFF BLOCK

INITIALS AND DATE ALLOW PROCESS CONTINUATION

CHECK MATERIAL RECEIVED AGAINST PRINT

SAW CUT ENDS MUST BE CUT SQUARE WITHIN 1/16"

RECORD ACTUAL DIMENSIONS FOR 1ST AND LAST PART.

S.O. # _____

	INITIALS	DATE
SAW		
MILL		
STAMPING/ETCHING		
DRILLING		
WELDING		
ASSEMBLY		
PUNCHING		

COMMENTS _____

IF ANY DIMENSION DOES NOT MEET TOLERANCES ON THIS DRAWING STOP PROCESS AND NOTIFY SUPERVISOR

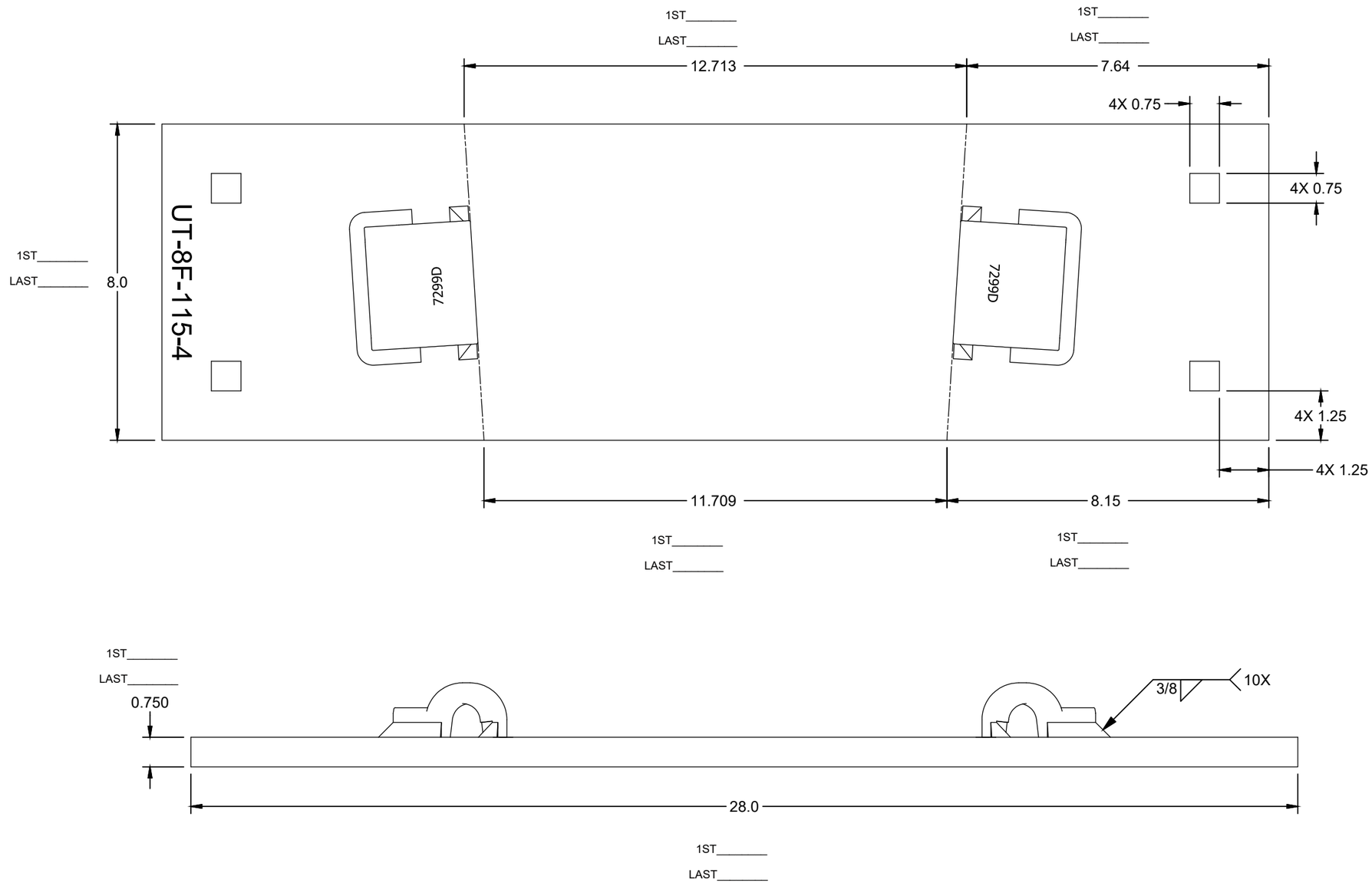

ASSEMBLY - BILL OF MATERIAL

ITEM	QTY	PART NUMBER	DESCRIPTION
1	1	RS075800A36	RAW STOCK_A36_0.750_8.000
2	2	PBN115REWS7299D	PBN_7299_DOMESTIC_FLAT
3	2	PN-PD-ECLIPD	E-CLIP_RH_DOMESTIC

UNLESS OTHERWISE SPECIFIED DIMENSIONS ARE IN INCHES

.X	.XX	.XXX	ANGLE
± .125	± .063	± .031	± 1/4°

DRAWN	S.RAKESH	8/20/2019
CHECK	S.KENT	8/28/2019
SHEET 1 OF 1	SIZE B	

C:\Unitrac\Plating-Frog\#08\FPA3763.idw

UNITRAC RAILROAD MATERIALS
PO BOX 7098
KNOXVILLE, TN 37921

TITLE
PLATE FROG RBMI_115RE_08_04_PAN_FLAT_SQ_AREA 623 03_MOD-D_DOMESTIC

IN MAS	DRAWING NO.	REV
08/28/2019	FPA3763	

THE DOCUMENT AND THE DATA DISCLOSED HERE IN OR HERE WITH IS NOT TO BE REPRODUCED, USED, OR DISCLOSED IN WHOLE OR IN PART TO ANYONE WITHOUT THE PERMISSION OF UNITRAC RAILROAD MATERIALS INC.

SIGN OFF BLOCK

INITIALS AND DATE ALLOW PROCESS CONTINUATION

CHECK MATERIAL RECEIVED AGAINST PRINT

SAW CUT ENDS MUST BE CUT SQUARE WITHIN 1/16"

RECORD ACTUAL DIMENSIONS FOR 1ST AND LAST PART.

S.O. # _____

	INITIALS	DATE
SAW		
MILL		
STAMPING/ETCHING		
DRILLING		
WELDING		
ASSEMBLY		
PUNCHING		

COMMENTS _____

IF ANY DIMENSION DOES NOT MEET TOLERANCES ON THIS DRAWING STOP PROCESS AND NOTIFY SUPERVISOR

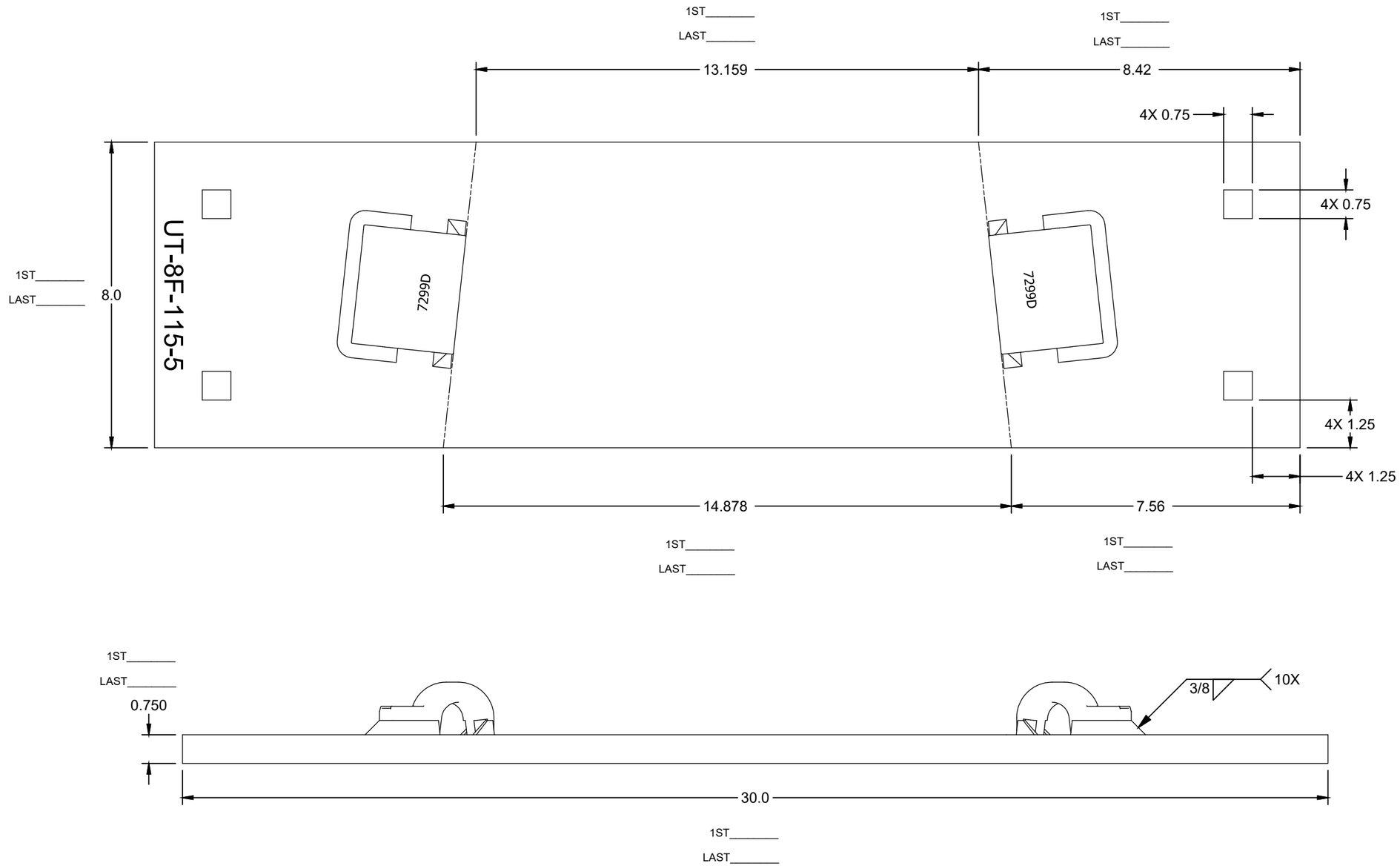

ASSEMBLY - BILL OF MATERIAL

ITEM	QTY	PART NUMBER	DESCRIPTION
1	1	RS075800A36	RAW STOCK_A36_0.750_8.000
2	2	PBN115REWS7299D	PBN_7299_DOMESTIC_FLAT
3	2	PN-PD-ECLIPD	E-CLIP_RH_DOMESTIC

UNLESS OTHERWISE SPECIFIED DIMENSIONS ARE IN INCHES

.X	.XX	.XXX	ANGLE
± .125	± .063	± .031	± 1/4°

DRAWN	S.RAKESH	8/20/2019
CHECK	S.KENT	8/28/2019
SHEET 1 OF 1	SIZE B	

C:\Unitrac\Plating-Frog\#08\FPA3764.idw

UNITRAC RAILROAD MATERIALS
PO BOX 7098
KNOXVILLE, TN 37921

TITLE
PLATE FROG RBMI_115RE_08_05_PAN_FLAT_SQ_AREA 623 03_MOD-D_DOMESTIC

IN MAS	DRAWING NO.	REV
08/28/2019	FPA3764	

THE DOCUMENT AND THE DATA DISCLOSED HERE IN OR HERE WITH IS NOT TO BE REPRODUCED, USED, OR DISCLOSED IN WHOLE OR IN PART TO ANYONE WITHOUT THE PERMISSION OF UNITRAC RAILROAD MATERIALS INC.

SIGN OFF BLOCK

INITIALS AND DATE ALLOW PROCESS CONTINUATION

CHECK MATERIAL RECEIVED AGAINST PRINT

SAW CUT ENDS MUST BE CUT SQUARE WITHIN 1/16"

RECORD ACTUAL DIMENSIONS FOR 1ST AND LAST PART.

S.O. # _____

	INITIALS	DATE
SAW		
MILL		
STAMPING/ETCHING		
DRILLING		
WELDING		
ASSEMBLY		
PUNCHING		

COMMENTS _____

IF ANY DIMENSION DOES NOT MEET TOLERANCES ON THIS DRAWING STOP PROCESS AND NOTIFY SUPERVISOR

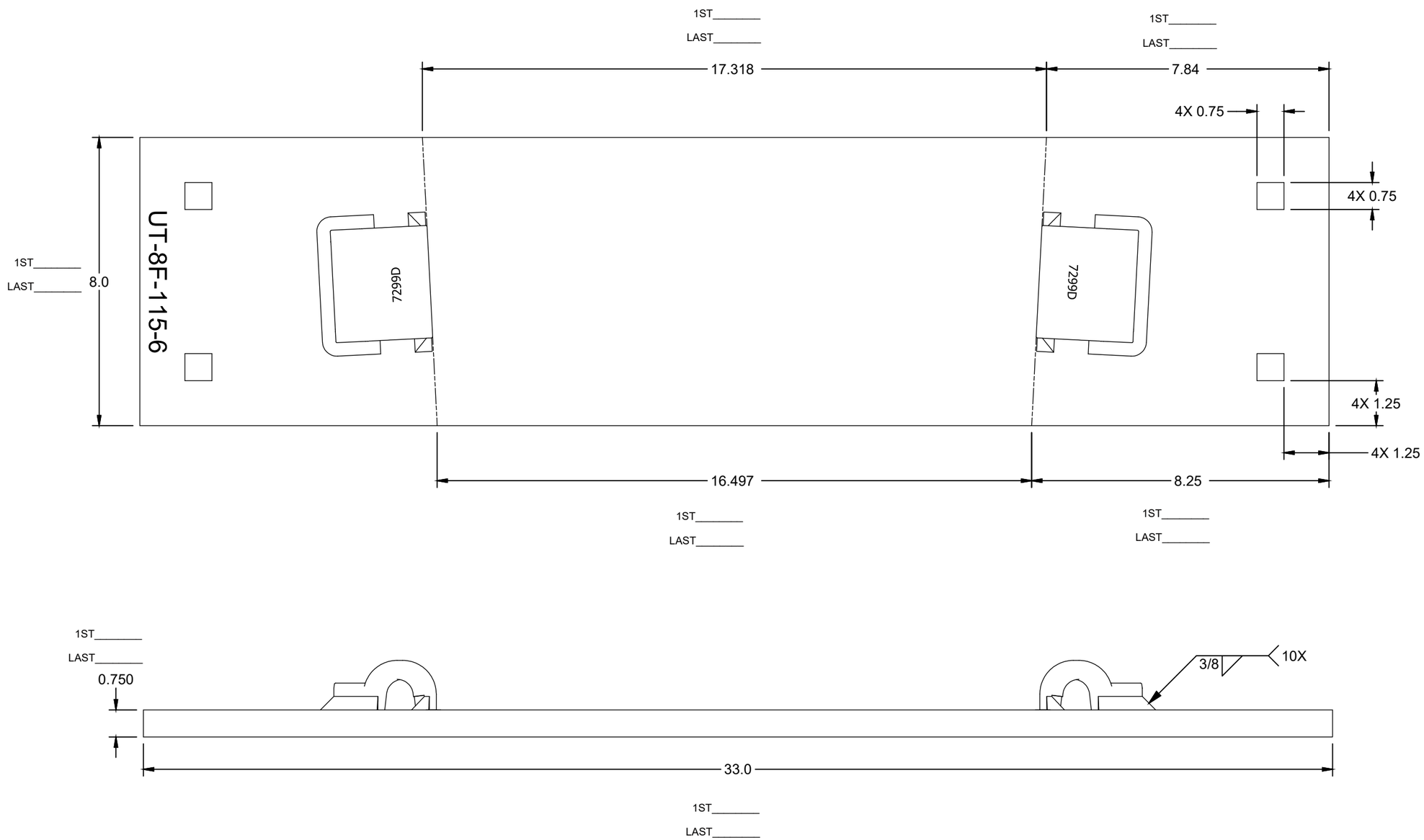

ASSEMBLY - BILL OF MATERIAL

ITEM	QTY	PART NUMBER	DESCRIPTION
1	1	RS075800A36	RAW STOCK_A36_0.750_8.000
3	2	PN-PD-ECLIPD	E-CLIP_RH_DOMESTIC
2	2	PBN115REWS7299D	PBN_7299_DOMESTIC_FLAT

UNLESS OTHERWISE SPECIFIED DIMENSIONS ARE IN INCHES

.X	.XX	.XXX	ANGLE
± .125	± .063	± .031	± 1/4°

DRAWN	S.RAKESH	8/20/2019
CHECK	S.KENT	8/28/2019
SHEET 1 OF 1	SIZE B	

C:\Unitrac\Plating-Frog\#08\FPA3765.idw

UNITRAC RAILROAD MATERIALS
PO BOX 7098
KNOXVILLE, TN 37921

TITLE
PLATE FROG RBMI_115RE_08_06_PAN_FLAT_SQ_AREA 623 03_MOD-D_DOMESTIC

IN MAS	DRAWING NO.	REV
08/28/2019	FPA3765	

THE DOCUMENT AND THE DATA DISCLOSED HERE IN OR HERE WITH IS NOT TO BE REPRODUCED, USED, OR DISCLOSED IN WHOLE OR IN PART TO ANYONE WITHOUT THE PERMISSION OF UNITRAC RAILROAD MATERIALS INC.

SIGN OFF BLOCK

INITIALS AND DATE ALLOW PROCESS CONTINUATION

CHECK MATERIAL RECEIVED AGAINST PRINT

SAW CUT ENDS MUST BE CUT SQUARE WITHIN 1/16"

RECORD ACTUAL DIMENSIONS FOR 1ST AND LAST PART.

S.O. # _____

	INITIALS	DATE
SAW		
MILL		
STAMPING/ETCHING		
DRILLING		
WELDING		
ASSEMBLY		
PUNCHING		

COMMENTS _____

IF ANY DIMENSION DOES NOT MEET TOLERANCES ON THIS DRAWING STOP PROCESS AND NOTIFY SUPERVISOR

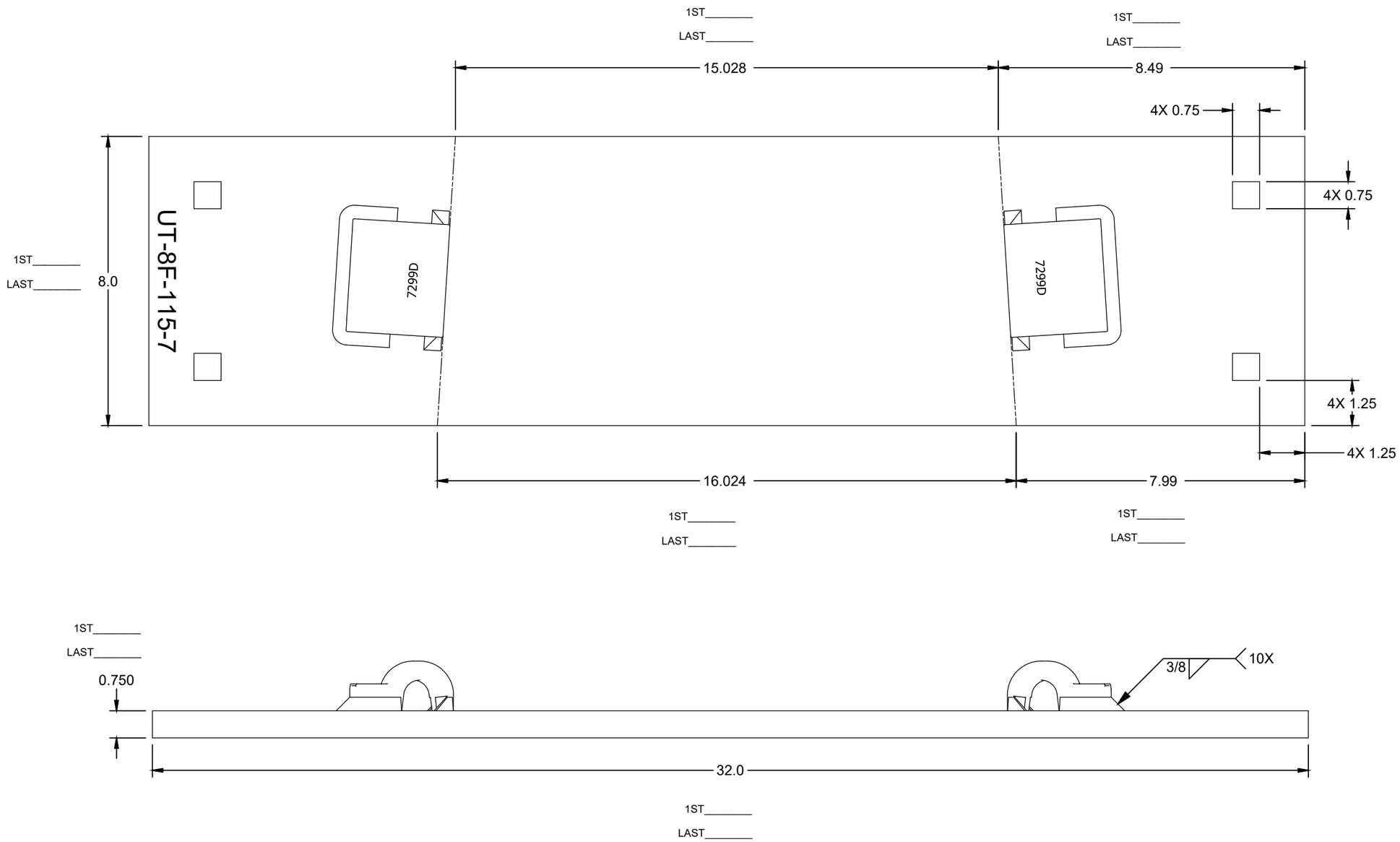

ASSEMBLY - BILL OF MATERIAL

ITEM	QTY	PART NUMBER	DESCRIPTION
1	1	RS075800A36	RAW STOCK_A36_0.750_8.000
2	2	PBN115REWS7299D	PBN_7299_DOMESTIC_FLAT
3	2	PN-PD-ECLIPD	E-CLIP_RH_DOMESTIC

UNLESS OTHERWISE SPECIFIED DIMENSIONS ARE IN INCHES

.X	.XX	.XXX	ANGLE
± .125	± .063	± .031	± 1/4°

DRAWN	S.RAKESH	8/21/2019
CHECK	S.KENT	8/28/2019
SHEET 1 OF 1	SIZE B	

C:\Unitrac\Plating-Frog\#08\FPA3766.idw

UNITRAC RAILROAD MATERIALS
PO BOX 7098
KNOXVILLE, TN 37921

TITLE
PLATE FROG RBMI_115RE_08_07_PAN_FLAT_SQ_AREA 623 03_MOD-D_DOMESTIC

IN MAS	DRAWING NO.	REV
08/28/2019	FPA3766	

THE DOCUMENT AND THE DATA DISCLOSED HERE IN OR HERE WITH IS NOT TO BE REPRODUCED, USED, OR DISCLOSED IN WHOLE OR IN PART TO ANYONE WITHOUT THE PERMISSION OF UNITRAC RAILROAD MATERIALS INC.

SIGN OFF BLOCK

INITIALS AND DATE ALLOW PROCESS CONTINUATION

CHECK MATERIAL RECEIVED AGAINST PRINT

SAW CUT ENDS MUST BE CUT SQUARE WITHIN 1/16"

RECORD ACTUAL DIMENSIONS FOR 1ST AND LAST PART.

S.O. # _____

	INITIALS	DATE
SAW		
MILL		
STAMPING/ETCHING		
DRILLING		
WELDING		
ASSEMBLY		
PUNCHING		

COMMENTS _____

IF ANY DIMENSION DOES NOT MEET TOLERANCES ON THIS DRAWING STOP PROCESS AND NOTIFY SUPERVISOR

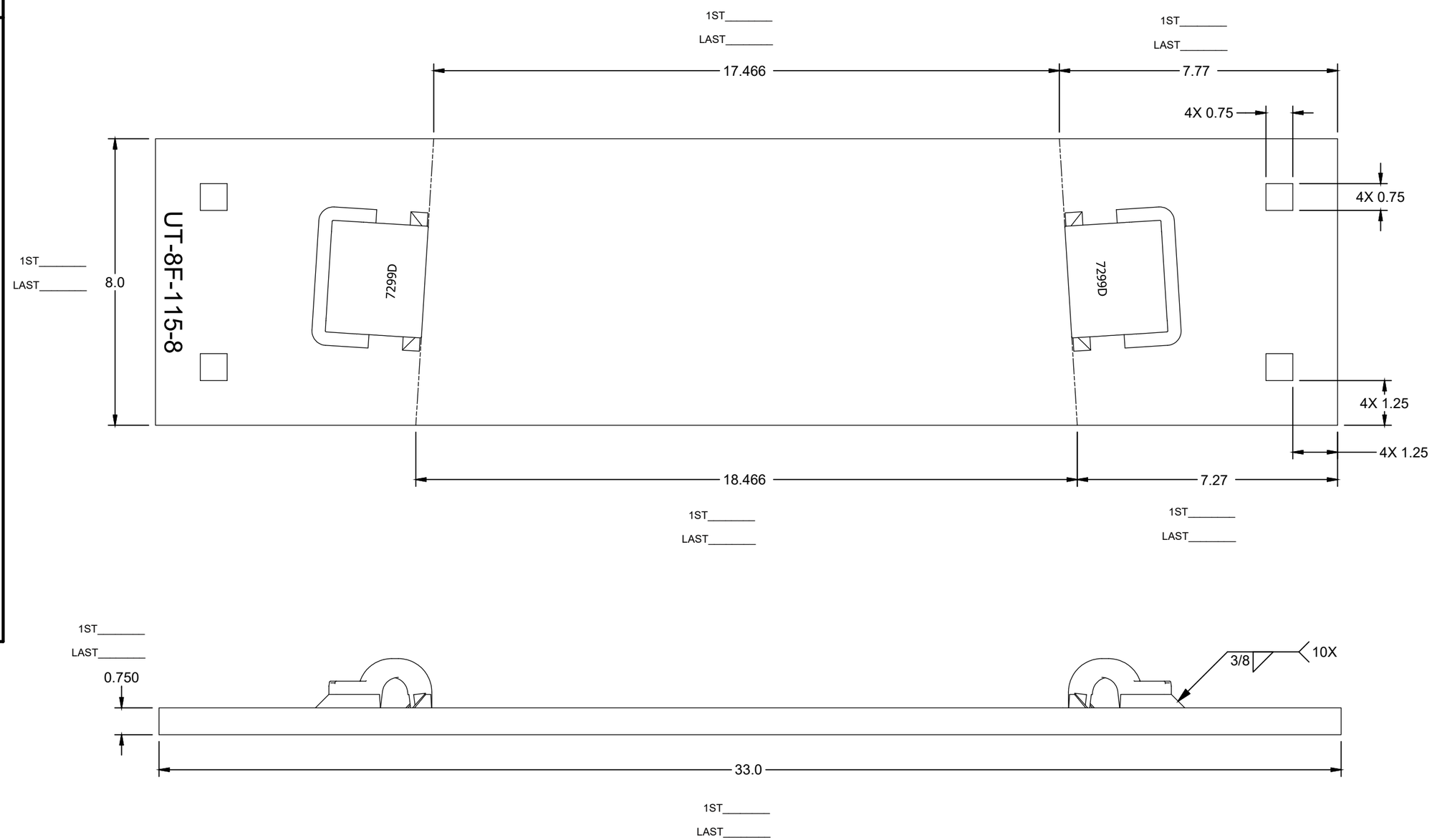

ASSEMBLY - BILL OF MATERIAL

ITEM	QTY	PART NUMBER	DESCRIPTION
1	1	RS075800A36	RAW STOCK_A36_0.750_8.000
2	2	PBN115REWS7299D	PBN_7299_DOMESTIC_FLAT
3	2	PN-PD-ECLIPD	E-CLIP_RH_DOMESTIC

UNLESS OTHERWISE SPECIFIED DIMENSIONS ARE IN INCHES

.X	.XX	.XXX	ANGLE
± .125	± .063	± .031	± 1/4°

DRAWN	S.RAKESH	8/21/2019
CHECK	S.KENT	8/28/2019
SHEET 1 OF 1	SIZE B	

C:\Unitrac\Plating-Frog\#08\FPA3767.idw

UNITRAC RAILROAD MATERIALS
PO BOX 7098
KNOXVILLE, TN 37921

TITLE
PLATE FROG RBMI_115RE_08_08_PAN_FLAT_SQ_AREA 623 03_MOD-D_DOMESTIC

IN MAS	DRAWING NO.	REV
08/28/2019	FPA3767	

THE DOCUMENT AND THE DATA DISCLOSED HERE IN OR HERE WITH IS NOT TO BE REPRODUCED, USED, OR DISCLOSED IN WHOLE OR IN PART TO ANYONE WITHOUT THE PERMISSION OF UNITRAC RAILROAD MATERIALS INC.

SIGN OFF BLOCK

INITIALS AND DATE ALLOW PROCESS CONTINUATION

CHECK MATERIAL RECEIVED AGAINST PRINT

SAW CUT ENDS MUST BE CUT SQUARE WITHIN 1/16"

RECORD ACTUAL DIMENSIONS FOR 1ST AND LAST PART.

S.O. # _____

	INITIALS	DATE
SAW		
MILL		
STAMPING/ETCHING		
DRILLING		
WELDING		
ASSEMBLY		
PUNCHING		

COMMENTS _____

IF ANY DIMENSION DOES NOT MEET TOLERANCES ON THIS DRAWING STOP PROCESS AND NOTIFY SUPERVISOR

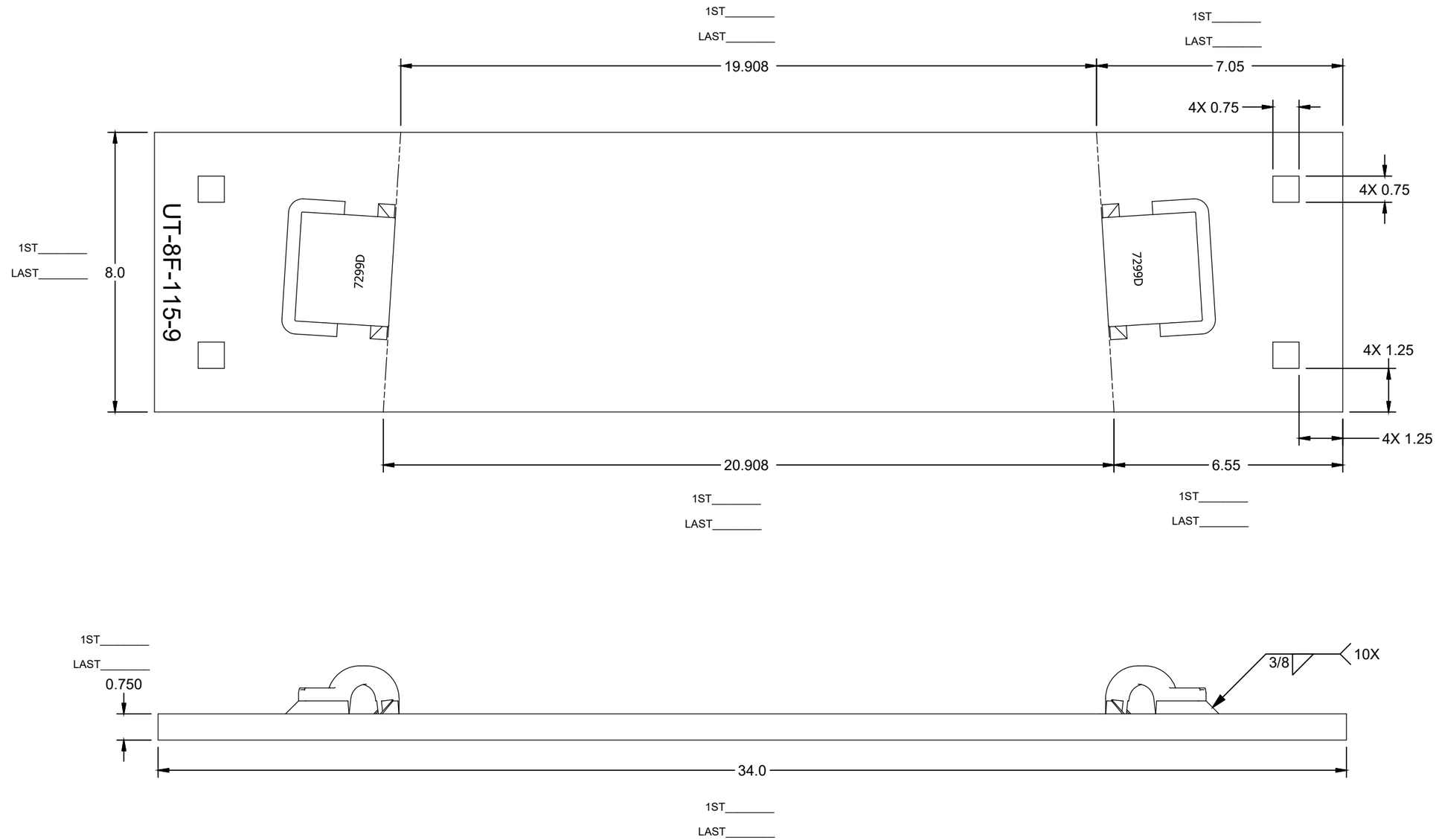

ASSEMBLY - BILL OF MATERIAL

ITEM	QTY	PART NUMBER	DESCRIPTION
1	1	RS075800A36	RAW STOCK_A36_0.750_8.000
2	2	PBN115REWS7299D	PBN_7299_DOMESTIC_FLAT
3	2	PN-PD-ECLIPD	E-CLIP_RH_DOMESTIC

UNLESS OTHERWISE SPECIFIED DIMENSIONS ARE IN INCHES

.X	.XX	.XXX	ANGLE
± .125	± .063	± .031	± 1/4°

DRAWN	S.RAKESH	8/21/2019
CHECK	S.KENT	8/28/2019
SHEET 1 OF 1	SIZE B	

C:\Unitrac\Plating-Frog\#08\FPA3768.idw

UNITRAC RAILROAD MATERIALS, INC.

PO BOX 7098
KNOXVILLE, TN 37921

TITLE
PLATE FROG RBMI_115RE_08_09_PAN_FLAT_SQ_AREA 623 03_MOD-D_DOMESTIC

IN MAS	DRAWING NO.	REV
08/28/2019	FPA3768	

THE DOCUMENT AND THE DATA DISCLOSED HERE IN OR HERE WITH IS NOT TO BE REPRODUCED, USED, OR DISCLOSED IN WHOLE OR IN PART TO ANYONE WITHOUT THE PERMISSION OF UNITRAC RAILROAD MATERIALS INC.

SIGN OFF BLOCK

INITIALS AND DATE ALLOW PROCESS CONTINUATION

CHECK MATERIAL RECEIVED AGAINST PRINT

SAW CUT ENDS MUST BE CUT SQUARE WITHIN 1/16"

RECORD ACTUAL DIMENSIONS FOR 1ST AND LAST PART.

S.O. # _____

	INITIALS	DATE
SAW		
MILL		
STAMPING/ETCHING		
DRILLING		
WELDING		
ASSEMBLY		
PUNCHING		

COMMENTS _____

IF ANY DIMENSION DOES NOT MEET TOLERANCES ON THIS DRAWING STOP PROCESS AND NOTIFY SUPERVISOR

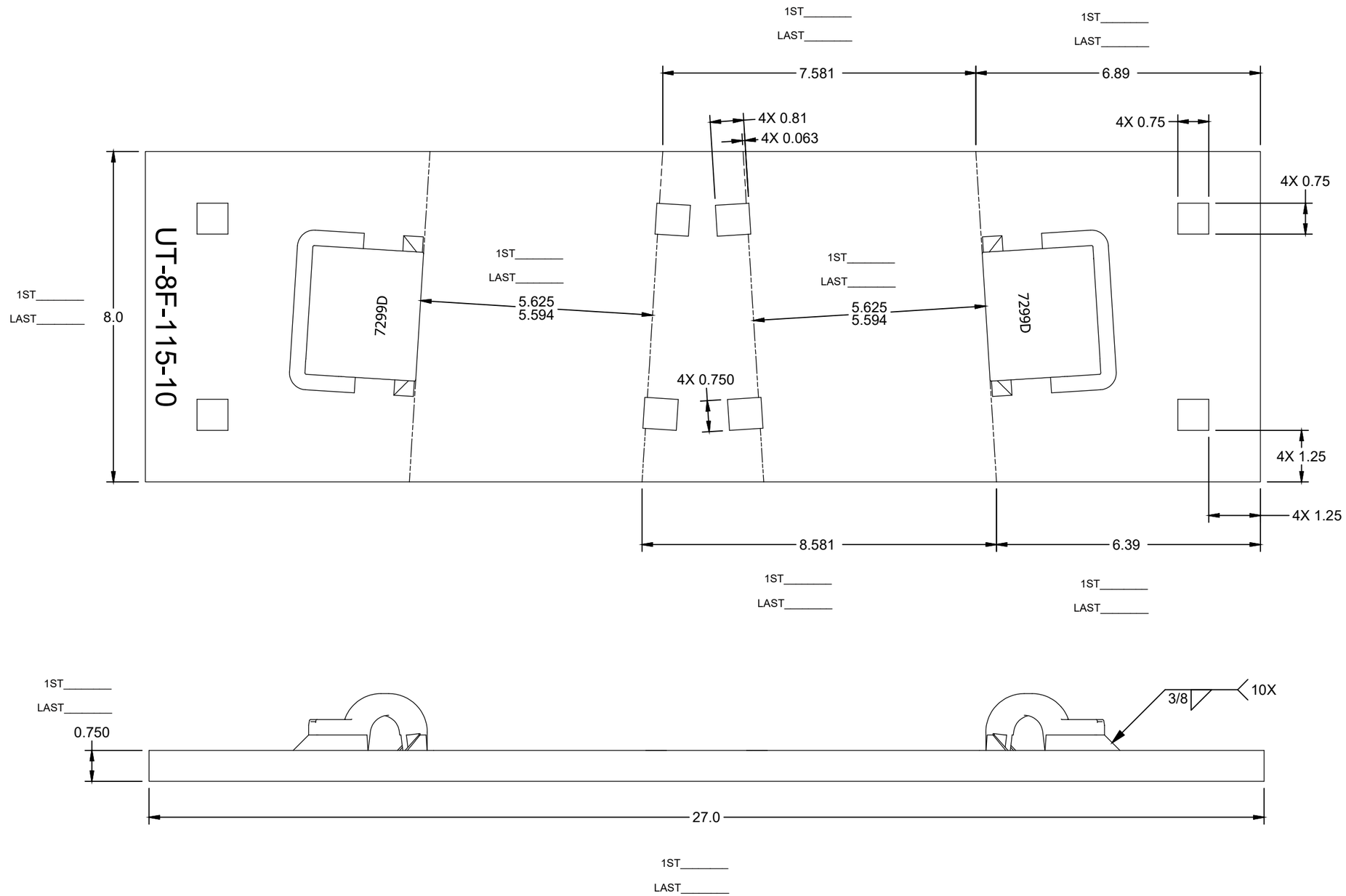

ASSEMBLY - BILL OF MATERIAL

ITEM	QTY	PART NUMBER	DESCRIPTION
1	1	RS075800A36	RAW STOCK_A36_0.750_8.000
2	2	PBN115REWS7299D	PBN_7299_DOMESTIC_FLAT
3	2	PN-PD-ECLIPD	E-CLIP_RH_DOMESTIC

UNLESS OTHERWISE SPECIFIED DIMENSIONS ARE IN INCHES

.X	.XX	.XXX	ANGLE
± .125	± .063	± .031	± 1/4°

C:\Unitrac\Plating-Frog\#08\FPA3769.idw

DRAWN	S.RAKESH	8/21/2019
CHECK	S.KENT	8/28/2019
SHEET	1 OF 1	SIZE B

UNITRAC RAILROAD MATERIALS, INC.

PO BOX 7098
KNOXVILLE, TN 37921

TITLE
PLATE FROG RBMI_115RE_08_10_PAN_FLAT_SQ_AREA 623 03_MOD-D_DOMESTIC

IN MAS	DRAWING NO.	REV
08/28/2019	FPA3769	

THE DOCUMENT AND THE DATA DISCLOSED HERE IN OR HERE WITH IS NOT TO BE REPRODUCED, USED, OR DISCLOSED IN WHOLE OR IN PART TO ANYONE WITHOUT THE PERMISSION OF UNITRAC RAILROAD MATERIALS INC.

SIGN OFF BLOCK

INITIALS AND DATE ALLOW PROCESS CONTINUATION

CHECK MATERIAL RECEIVED AGAINST PRINT

SAW CUT ENDS MUST BE CUT SQUARE WITHIN 1/16"

RECORD ACTUAL DIMENSIONS FOR 1ST AND LAST PART.

S.O. # _____

	INITIALS	DATE
SAW		
MILL		
STAMPING/ETCHING		
DRILLING		
WELDING		
ASSEMBLY		
PUNCHING		

COMMENTS _____

IF ANY DIMENSION DOES NOT MEET TOLERANCES ON THIS DRAWING STOP PROCESS AND NOTIFY SUPERVISOR

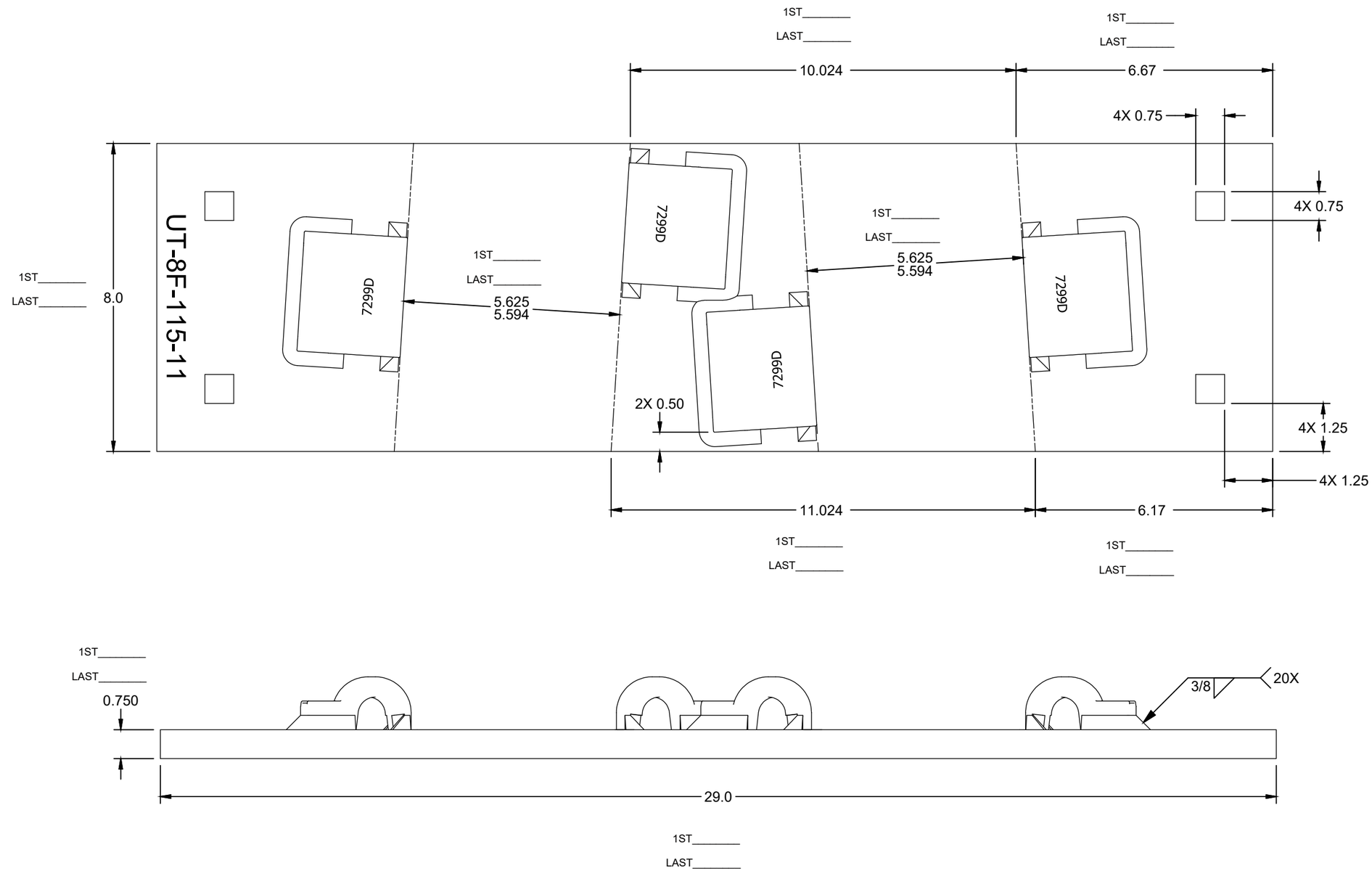

ASSEMBLY - BILL OF MATERIAL			
ITEM	QTY	PART NUMBER	DESCRIPTION
1	1	RS075800A36	RAW STOCK_A36_0.750_8.000
2	4	PBN115REWS7299D	PBN_7299_DOMESTIC_FLAT
3	4	PN-PD-ECLIPD	E-CLIP_RH_DOMESTIC

UNLESS OTHERWISE SPECIFIED DIMENSIONS ARE IN INCHES

.X	.XX	.XXX	ANGLE
± .125	± .063	± .031	± 1/4°

DRAWN	S.RAKESH	8/21/2019
CHECK	S.KENT	8/28/2019
SHEET 1 OF 1	SIZE B	

C:\Unitrac\Plating-Frog\#08\FPA3770.idw

UNITRAC RAILROAD MATERIALS, INC.

PO BOX 7098
KNOXVILLE, TN 37921

TITLE
PLATE FROG RBMI_115RE_08_11_PAN_FLAT_SQ_AREA 623 03_MOD-D_DOMESTIC

IN MAS	DRAWING NO.	REV
08/28/2019	FPA3770	

THE DOCUMENT AND THE DATA DISCLOSED HERE IN OR HERE WITH IS NOT TO BE REPRODUCED, USED, OR DISCLOSED IN WHOLE OR IN PART TO ANYONE WITHOUT THE PERMISSION OF UNITRAC RAILROAD MATERIALS INC.

SIGN OFF BLOCK

INITIALS AND DATE ALLOW PROCESS CONTINUATION

CHECK MATERIAL RECEIVED AGAINST PRINT

SAW CUT ENDS MUST BE CUT SQUARE WITHIN 1/16"

RECORD ACTUAL DIMENSIONS FOR 1ST AND LAST PART.

S.O. # _____

	INITIALS	DATE
SAW		
MILL		
STAMPING/ETCHING		
DRILLING		
WELDING		
ASSEMBLY		
PUNCHING		

COMMENTS _____

IF ANY DIMENSION DOES NOT MEET TOLERANCES ON THIS DRAWING STOP PROCESS AND NOTIFY SUPERVISOR

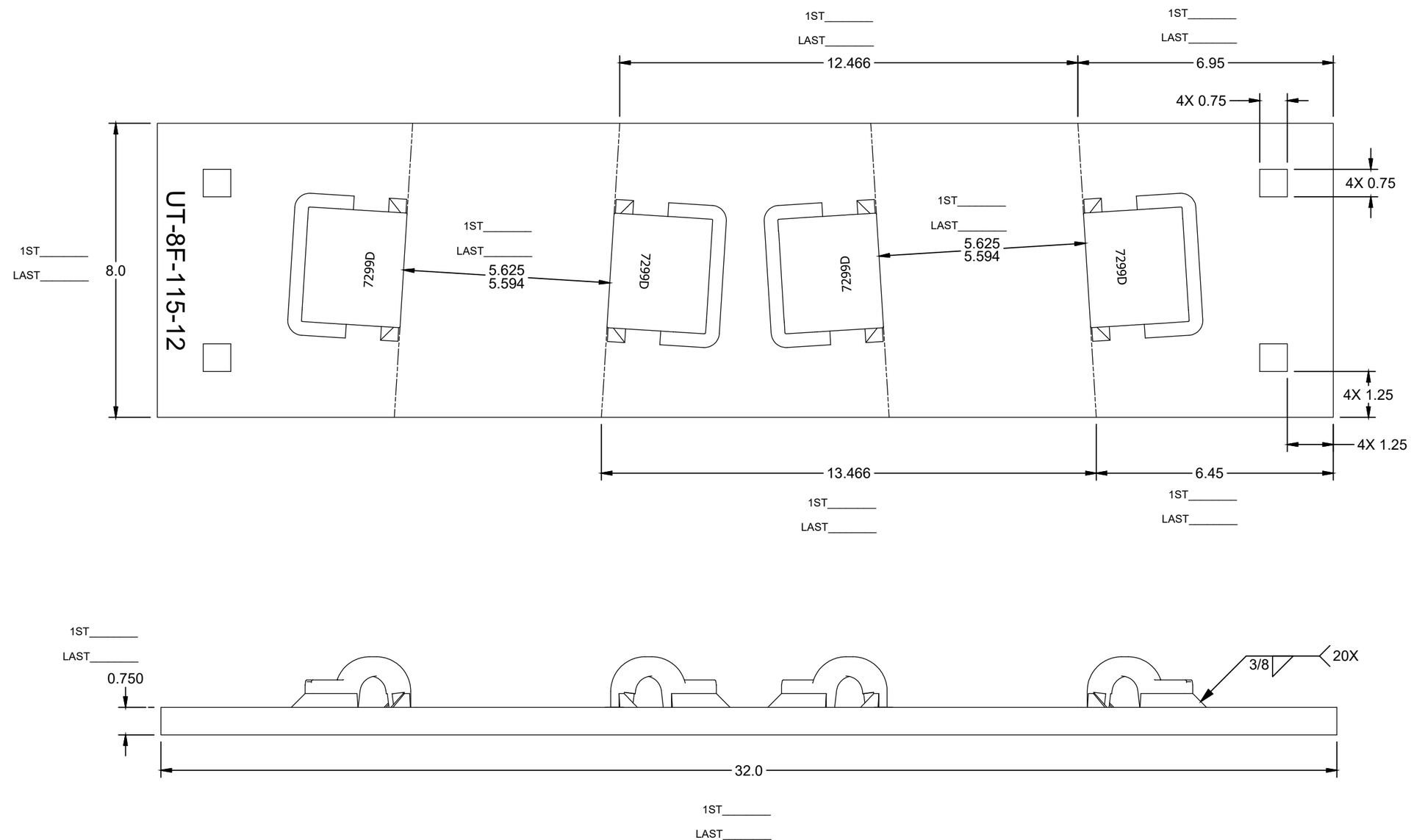

ASSEMBLY - BILL OF MATERIAL

ITEM	QTY	PART NUMBER	DESCRIPTION
1	1	RS075800A36	RAW STOCK_A36_0.750_8.000
2	4	PBN115REWS7299D	PBN_7299_DOMESTIC_FLAT
3	4	PN-PD-ECLIPD	E-CLIP_RH_DOMESTIC

UNLESS OTHERWISE SPECIFIED DIMENSIONS ARE IN INCHES

.X	.XX	.XXX	ANGLE
± .125	± .063	± .031	± 1/4°

C:\Unitrac\Plating-Frog\#08\FPA3771.idw

DRAWN	S.RAKESH	8/21/2019
CHECK	S.KENT	8/28/2019
SHEET	1 OF 1	SIZE B

UNITRAC RAILROAD MATERIALS, INC.
PO BOX 7098
KNOXVILLE, TN 37921

TITLE: PLATE FROG RBMI_115RE_08_12_PAN_FLAT_SQ_AREA 623 03_MOD-D_DOMESTIC

IN MAS	DRAWING NO.	REV
08/28/2019	FPA3771	

THE DOCUMENT AND THE DATA DISCLOSED HERE IN OR HERE WITH IS NOT TO BE REPRODUCED, USED, OR DISCLOSED IN WHOLE OR IN PART TO ANYONE WITHOUT THE PERMISSION OF UNITRAC RAILROAD MATERIALS INC.

SIGN OFF BLOCK

INITIALS AND DATE ALLOW PROCESS CONTINUATION

CHECK MATERIAL RECEIVED AGAINST PRINT

SAW CUT ENDS MUST BE CUT SQUARE WITHIN 1/16"

RECORD ACTUAL DIMENSIONS FOR 1ST AND LAST PART.

S.O. # _____

	INITIALS	DATE
SAW		
MILL		
STAMPING/ETCHING		
DRILLING		
WELDING		
ASSEMBLY		
PUNCHING		

COMMENTS _____

IF ANY DIMENSION DOES NOT MEET TOLERANCES ON THIS DRAWING STOP PROCESS AND NOTIFY SUPERVISOR

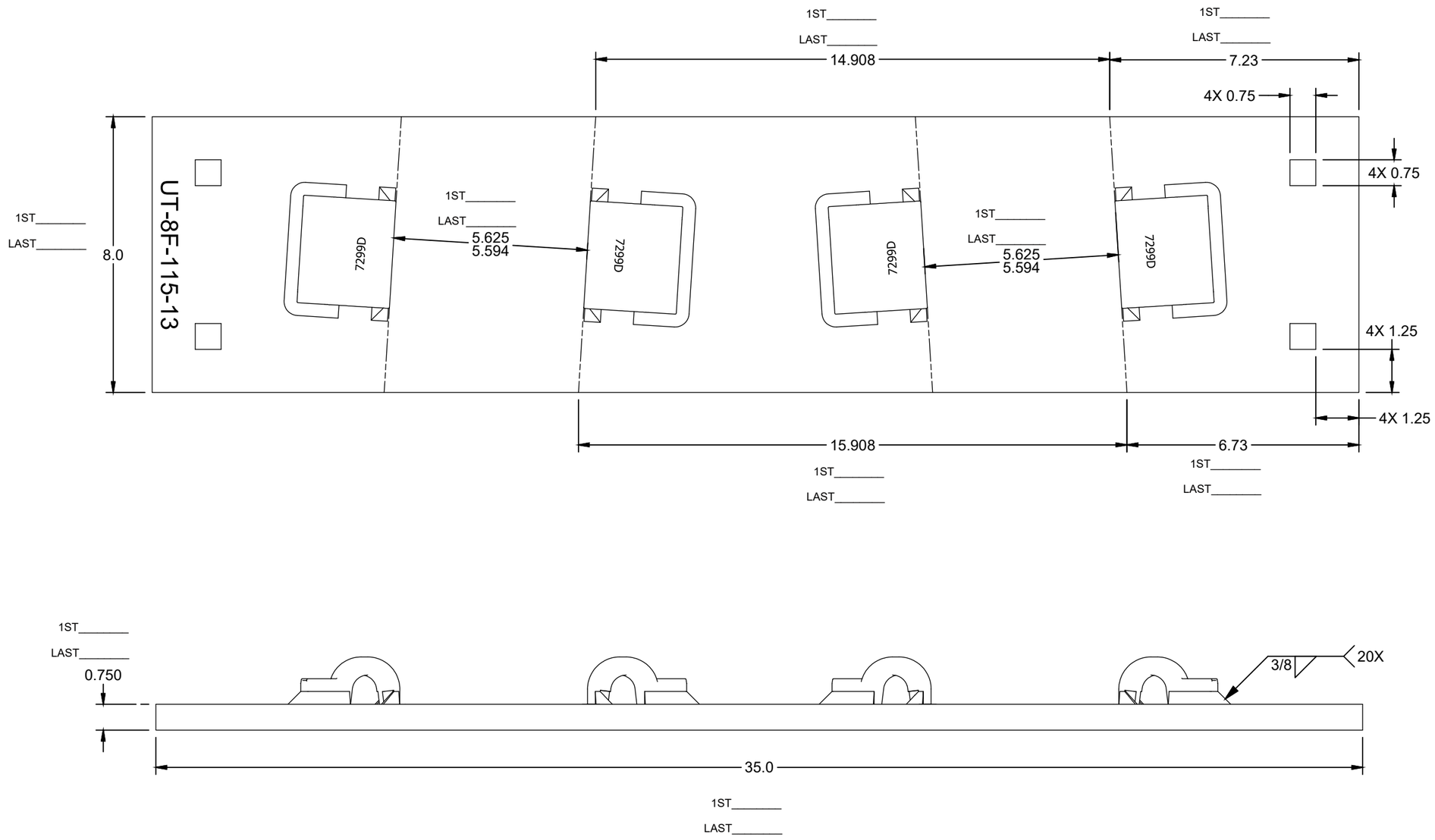

ASSEMBLY - BILL OF MATERIAL			
ITEM	QTY	PART NUMBER	DESCRIPTION
1	1	RS075800A36	RAW STOCK_A36_0.750_8.000
2	4	PBN115REWS7299D	PBN_7299_DOMESTIC_FLAT
3	4	PN-PD-ECLIPD	E-CLIP_RH_DOMESTIC

UNLESS OTHERWISE SPECIFIED DIMENSIONS ARE IN INCHES

.X	.XX	.XXX	ANGLE
± .125	± .063	± .031	± 1/4°

DRAWN	S.RAKESH	8/21/2019
CHECK	S.KENT	8/28/2019
SHEET 1 OF 1	SIZE B	

C:\Unitrac\Plating-Frog\#08\FPA3772.idw

UNITRAC RAILROAD MATERIALS, INC.

PO BOX 7098
KNOXVILLE, TN 37921

TITLE
PLATE FROG RBMI_115RE_08_13_PAN_FLAT_SQ_AREA 623 03_MOD-D_DOMESTIC

IN MAS	DRAWING NO.	REV
08/28/2019	FPA3772	

THE DOCUMENT AND THE DATA DISCLOSED HERE IN OR HERE WITH IS NOT TO BE REPRODUCED, USED, OR DISCLOSED IN WHOLE OR IN PART TO ANYONE WITHOUT THE PERMISSION OF UNITRAC RAILROAD MATERIALS.

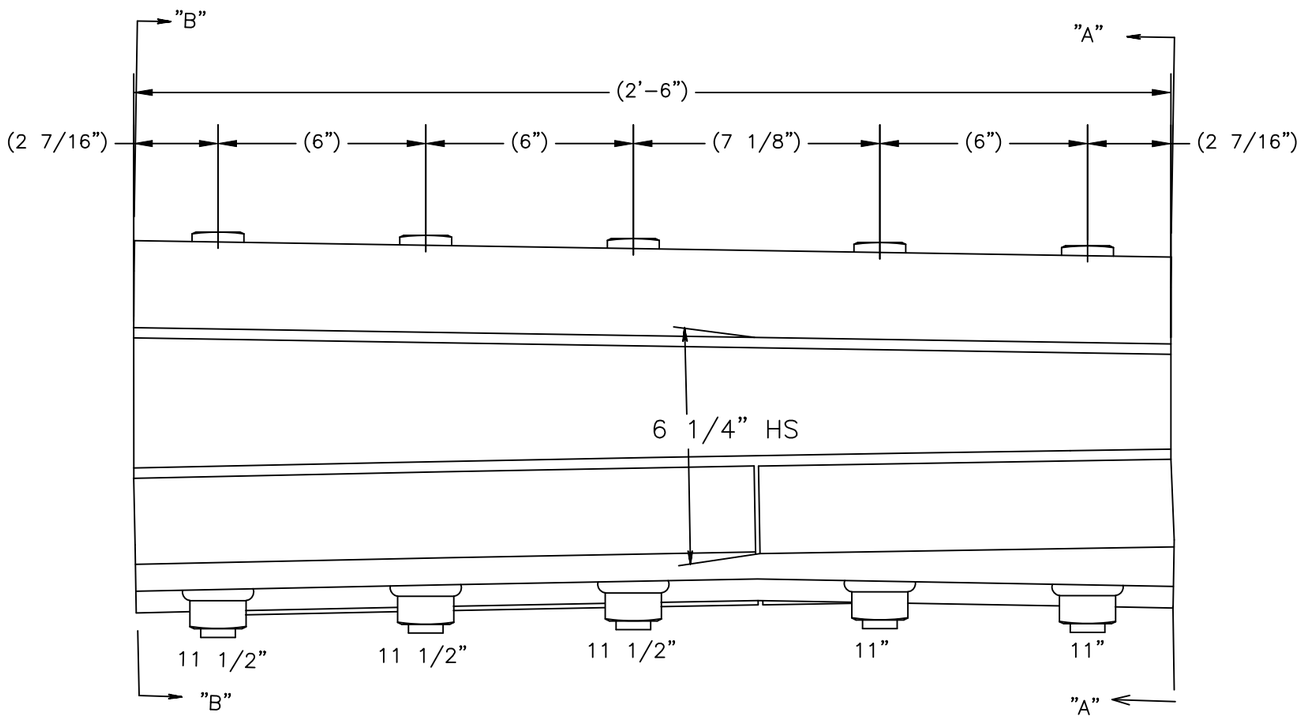

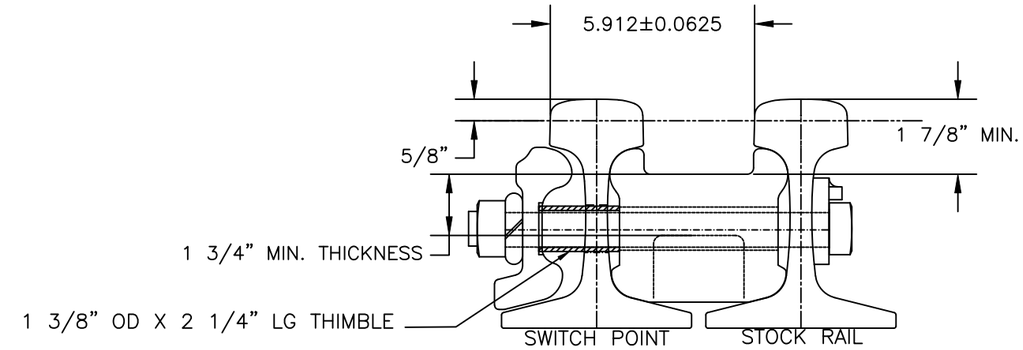

SECTION"A–A"

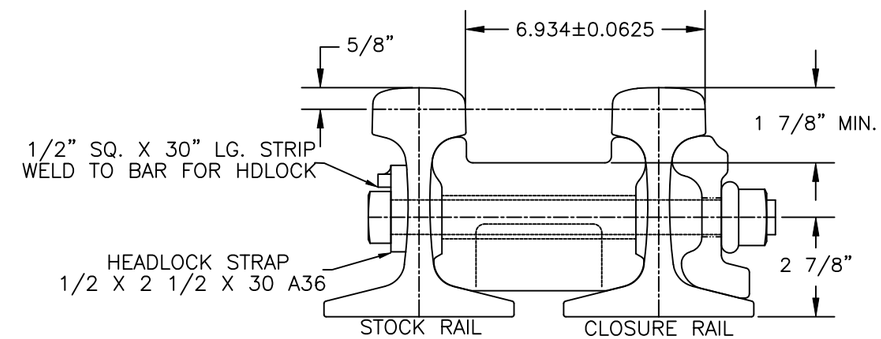

SECTION"B–B"

Parts List

ITEM	QTY	PART NUMBER	DESCRIPTION
1	1	HBB1033	HEEL BLOCK BAR_115RE_LH_5_16 6–19 6_AREA_DOMESTIC
2	1	HBC115RERAWD	HEEL BLOCK_115RE_NA_16 6_5_CAST_GRAD_AREA 112 03_DOMESTIC
3	1	HBN9000–11	HEEL BLOCK_THUMBLE_1.375
4	1	HBN–STRAPS	HEEL BLOCK STRAP_115/136RE_UNIV_5_AREA 112 03
5	5	LNP–DD	WASHER LOCK_1.000_.375
6	2	TB–G8SHP1100	BOLT SQ_1.000_11.000
7	3	TB–GPSHP1150	BOLT SQ_1.000_11.500

UNLESS OTHERWISE SPECIFIED DIMENSIONS ARE IN INCHES

.X	.XX	.XXX	ANGLE
± .125	± .063	± .031	± 1/4°

DRAWN	C.TAYLOR	6/19/2019
CHECK	S.KENT	6/19/2019
SHEET	1 OF 1	SIZE B

C:\UNITRAC\PURCHASED PARTS\CAST-SWITCH HEEL BLOCKS\HBNA1049

UNITRAC RAILROAD MATERIALS
PO BOX 7098
KNOXVILLE, TN 37921

TITLE: HEEL BLOCK ASSY_115RE_LH_16 6_5_CAST_GRAD_AREA 112_DOMESTIC

IN MAS	DRAWING NO.	REV
6/18/2019	HBNA1049	----

THE DOCUMENT AND THE DATA DISCLOSED HERE IN OR HERE WITH IS NOT TO BE REPRODUCED, USED, OR DISCLOSED IN WHOLE OR IN PART TO ANYONE WITHOUT THE PERMISSION OF UNITRAC RAILROAD MATERIALS.

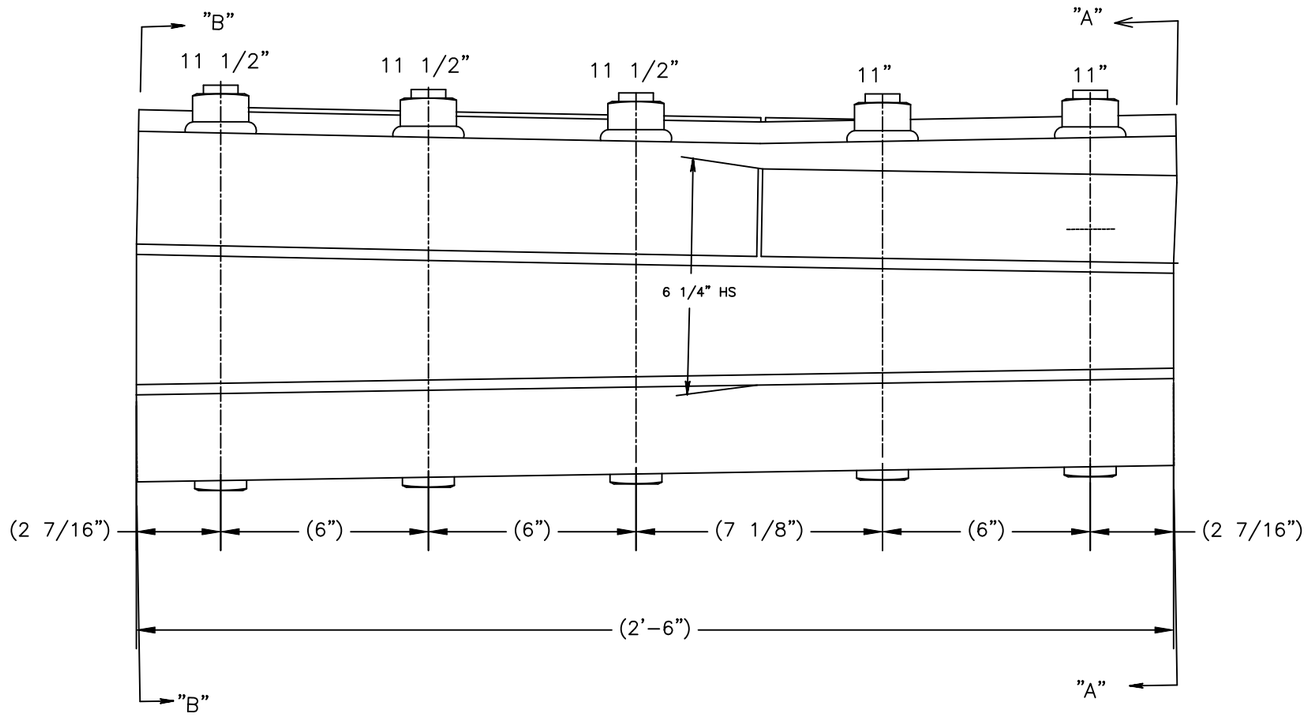

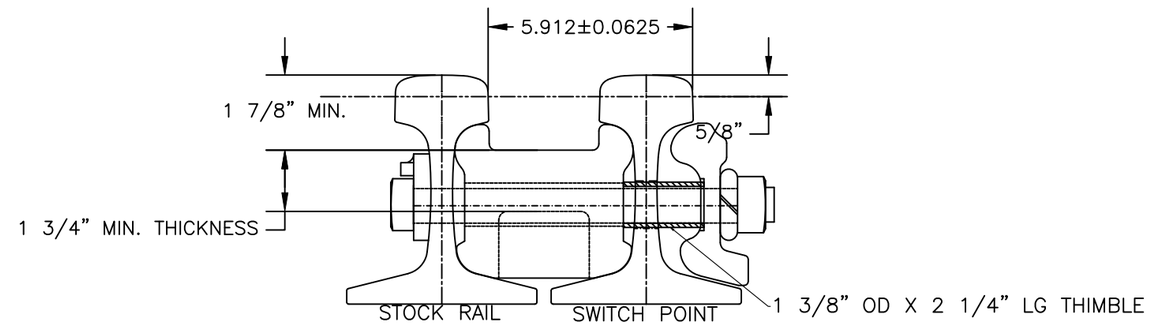

SECTION"A-A"

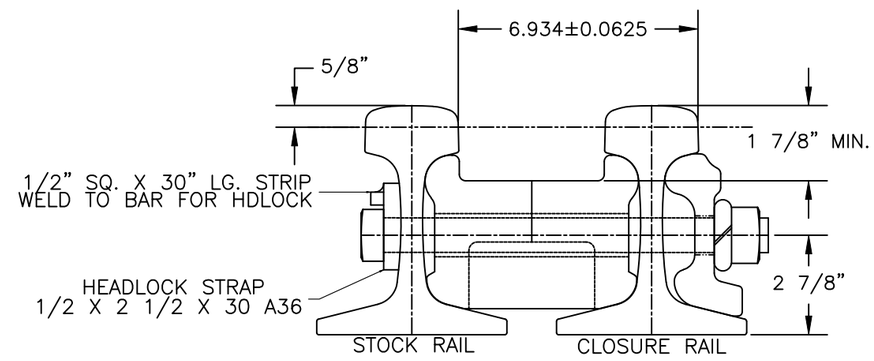

SECTION"B-B"

Parts List			
ITEM	QTY	PART NUMBER	DESCRIPTION
1	1	HBB1034	HEEL BLOCK BAR_115RE_RH_5_16 6-19 6_AREA_DOMESTIC
2	1	HBC115RERAWD	HEEL BLOCK_115RE_NA_16 6_5_CAST_GRAD_AREA 112 03_DOMESTIC
3	1	HBN9000-11	HEEL BLOCK_THUMBLE_1.375
4	1	HBN-STRAPS	HEEL BLOCK STRAP_115/136RE_UNIV_5_AREA 112 03
5	5	LNP-DD	WASHER LOCK_1.000_.375
6	2	TB-G8SHP1100	BOLT SQ_1.000_11.000
7	3	TB-GPSHP1150	BOLT SQ_1.000_11.500

UNLESS OTHERWISE SPECIFIED DIMENSIONS ARE IN INCHES

.X	.XX	.XXX	ANGLE
± .125	± .063	± .031	± 1/4°

DRAWN	C.TAYLOR	6/19/2019
CHECK	S.KENT	6/19/2019
SHEET 1 OF 1	SIZE B	

C:\UNITRAC\PURCHASED PARTS\CAST-SWITCH HEEL BLOCKS\HBNA1050

UNITRAC RAILROAD MATERIALS
PO BOX 7098
KNOXVILLE, TN 37921

TITLE: HEEL BLOCK ASSY_115RE_RH_16 6_5_CAST_GRAD_AREA 112_DOMESTIC

IN MAS	DRAWING NO.	REV
6/18/2019	HBNA1050	----

Submittal: 57
Revision:
Date Submitted: 2/12/2020
Response Due: 2/26/2020

kokosing
CONSTRUCTION COMPANY, INC.
HEAVY HIGHWAY DIVISION
1539 Lowell Street • Elyria, Ohio 44035
Phone 440-322-2685 • Fax 440-322-2710

Project: ODOT 3000(17) – Opportunity Corridor 3
Subject: GCRTA Track Materials

To: Chris Coppock, P.E.
GCRTA-Track Engineer
Email: Christopher.Coppock@gcrta.org

From: Mike Luyster, PE
Kokosing Construction Company, Inc.
Email: mrl@kokosing.biz

We Are Sending:	Submitted For:
☐ Shop Drawings	☒ Approval
☒ Product Data / Samples	☐ Acceptance
☐ Certifications / Test Results	☐ Record
☐ Quality Control Procedures	
☐ Means & Methods	**Sent Via:**
☐ As-Built Construction Drawings	☒ Attached (Electronic)
☐ Other:	☐ Attached (Hard Copy)

Submittal #	Spec	Revision	Description	Status
44			RBM Turnout Drawings	For Approval

Comments:

Please see the included material submittal for the track materials received from Rail Works for review/approval.

Please feel free to contact me for any questions/concerns regarding this submittal.

Signed: Mike Luyster

SUBMITTAL COVER SHEET

First Submittal [X] Date: 8/27/2019

Submittal No.: **002** Resubmitted [ ] Date:

Project: Opportunity Corridor
ODOT 173000

Contractor:
Address: RailWorks Track Services, Inc.
512 Twin Rail Dr. Minooka, IL 60447
PH / Fax: 815-290-3110 / 815-521-3344
Subcontractor

Shop Drawing Title: 115RE Rail

Submittal Description: 115RE Rail

[ ] Product Data [ ] Test [ ] Schedules [ ] Samples

Manufacturer:

REFERENCES:
Spec Section (s):
Spec Title:
Drawing Number (s):
Detail Number (s):

ADDITIONAL REMARKS
Date Required on Site:

CONTRACTOR'S APPROVAL
Date: 08.28.19 By: Brian Leuck

[X] Submitted product has been reviewed for Release to Architect/Engineer and
[X] Submitted product is as specified

[ ] Submitted product is equal to specified product.

RailWorks Track Services Hereby certifies that this submittal has been reviewed and verified to be in accordance with drawings and specifications as noted. Deviations, if applicable, are as noted.

Signed:

APPROVAL:

125 Windsor Drive Suite 122
Oak Brook, IL 60523
(630)-320-1372
nblakemore@lbfoster.com

August 27th, 2019

RailWorks Track Services
Attention: Brian Leuck
512 Twin Rail Drive, Ste 400
Minooka, IL 60447

RE: Purchase Order 00408102416 ON

Dear Mr. Leuck,

Included with this cover is our submittal for the material provided for the above referenced project material.

New 115RE Head Hardened Rail Drawing
New 115RE Head Hardened Rail Sample Mill Cert- Actual Mill Certs will be sent after Rail is shipped.
New 5/8” X 6” Track Spikes Drawing

Please note that we will hold all production and shipping scheduling until we receive submittal approval. If you need any additional information, or additional copies, please let me know.

Sincerely,

Nicholas Blakemore
Sales Representative

L.B. Foster Company

115-lb A.R.E.M.A. specifications

Drawing is not to scale

LBFoster Rail Products

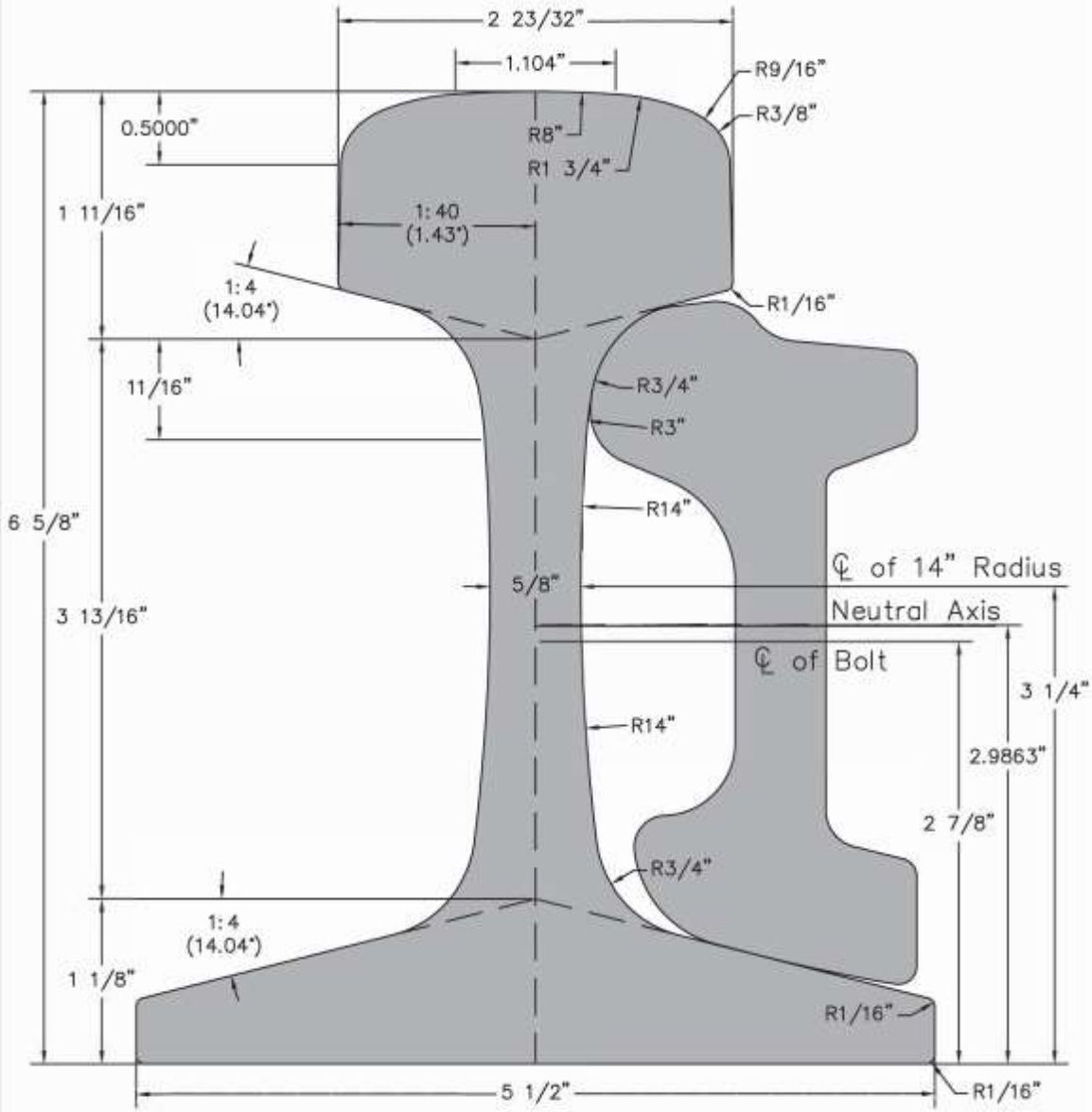

ANGLE BAR

24" length, 72 lbs. per pair. 36" length, 107 lbs. pair. 1" x 5 1/2" button head, oval neck track bolt with heavy square nut.

	39 FT	40 FT	80 FT
LBS/FT (Nominal)	17.9	17.9	17.9
Pairs			
Net Ton	1.3	1.3	.7
Mile of Track	270	264	132

RAIL (39 FT)

Area In ²		11.2171
Sec. Modulus In ³	Head	18.0
	Base	21.9
Mom. Inertia In ⁴		65.5
Lbs/Yd (Nominal)		114.3754
Track Feet/Net Ton		26.23
Net Tons/Track Mile		201.30

Steel Dynamics, Inc.
Long Products Group
Structural and Rail Division
2601 S. County Road 700 East
Columbia City, Indiana 46725
(260) 625-8100 (260) 625-8950 FAX

Quality Steel 100% EAF Melted and Manufactured in the USA

SAMPLE

CERTIFIED MILL TEST REPORT (RAIL)

Printed: **08 / 14 / 2019**
Produced: **08 / 08 / 2019**

PRODUCT INFORMATION

Section	115RE
Steel Type	AREMA HH
Heat Number	B167178
Condition(s)	Vacuum Degassed

SPECIFICATIONS

Standards	Grades
» AREMA	AREMA HH
NS	NS HH

SHIPMENT DETAILS

BOL # 0000560040

Length	pcs	Customer PO
80' 0"	2	4500011382

CHEMICAL ANALYSIS (weight percent)

C	Mn	P	S	Si	Cu	Ni	Cr	Mo	Sn	V	Nb/Cb	N	Al	Analysis Type
.85	.96	.009	.014	.41	.14	.05	.23	.02	.008	.003	.001	.0072	.003	Heat

Tensile Properties / Clean Steel Analysis ASTM E45 Method A

Test	Yield (fy) Strength ksi	Tensile (fu) Strength ksi	Elong. %	Strand	Macro Etch	Cat. A Sulfides	Cat. B Alumina	Cat. C Silicates	Cat. D Globular Oxides	Average	Surface Hardness BHN
1	131	185	12	6	OK	1	1	.5	.5	.75	386

Hardness At Depth

Position	BHN
1	387
2	374
3	389
4A	387
4B	389
5A	381
5B	385

Notes: **Rails supplied on this order have been fully ultrasonically tested and found to be in conformance with the specification to which they were supplied.**

I hereby certify that the content of this report are accurate and correct. All tests and operations performed by this material manufacturer are in compliance with the requirements of the material specifications and applicable purchaser designated requirements.

Signed: **Todd Bashford** Todd A Bashford
Quality Manager

Form F-6100-002-054 rev 5

Submittal: 061

Revision: 0
Date Submitted: 3/2/2020
Response Due By: 3/16/2020

kokosing CONSTRUCTION COMPANY, INC.
886 McKinley Ave.
Columbus, OH 43222
Phone: (614) 228-1029
Fax: (614) 228-7065

Project: 16051 - ODOT 173000 CUY IR 490/SR010 (OC3)
Description: GCRTA Materials: Pandrol Plates and E-Clips

To: Chris Coppock, P.E.
GCRTA – Track Engineer
Email: Christopher.Coppock@gcrta.org

From: Oliver Bluestone
Kokosing Construction Company, Inc.
Email: obluestone@kokosing.biz

Submittal Type:	**Submitted For:**
☐ Engineered Drawings	☒ Approval
☒ Shop Drawings	☐ Record
☐ Working Drawings	☐ Other
☐ CPM Schedule	
☐ Material Certifications / Test Results	**Sent Via:**
☐ Reports	☒ Attached (Electronic)
☐ Product Data/Samples	☐ Attached (Hard Copy)
☐ Other:	

Submittal #	Copies	Spec #	Rev. #	Description	Status
061	1		0	061 – **GCRTA Materials: Pandrol Plates and E-Clips**	For Approval

Comments:

Please see the included shop drawings received from Rail Works for review/approval.

Signed: _____

RAILWORKS® TRACK SERVICES

SUBMITTAL COVER SHEET

First Submittal [X] Date: 2/25/2020

Resubmitted [ ] Date:

Submittal No. 004

Project: Opportunity Corridor
ODOT 173000

Contractor: RailWorks Track Services, Inc.
512 Twin Rail Dr.
Minooka, IL. 60447
815.290.3111

Shop Drawing Title: Rolled Pandrol Plate

Submittal Description: Pandrol Plate

[ ] Product Data [ ] Test [ ] Schedules [ ] Samples

Manufacturer:

REFERENCES:

Spec Section(s): 34 11 36

Spec Title: Trackwork Fasteners

Drawing Number(s):

Detail Number(s):

ADDITIONAL REMARKS:

Date Required on Site:

CONTRACTORS APPROVAL:

Date: 02.25.20 By: Nithya Rajendran

[X] Submitted product has been reviewed for release to Architect/Engineer.

[X] Submitted product is as specified.

[ ] Submitted is equal to specified product.

RailWorks Track Services, Inc. hereby certifies that the that this submittal has been reviewed and verified with drawings and specifications as noted. Deviations, are as noted.

Signed: Nithya

OWNER APPROVAL:

A PANDROL BRAND RAIL FASTENING COMPONENT

PUNCHING PATTERN	SHEARED LENGTH	DESCRIPTION
P25	7"	7"x15 3/16" (6)11/16"SQ HOLES
P25M	7"	7"x15 3/16" (6)1"RD HOLES
P26	7 3/4"	7 3/4"x15 3/16" (6)11/16"SQ HOLES
P26M	7 3/4"	7 3/4"x15 3/16" (4)1"RD -(2)11/16"SQ
P29	7 3/4"	7 3/4"x15 3/16" (4)13/16"RD-(2)11/16"SQ HOLES
P30	7 3/4"	7 3/4"x15 3/16" (4)15/16"RD-(2)11/16"SQ HOLES
P31	7"	7"x15 3/16" (4)15/16"RD-(2)11/16"SQ HOLES
P37	7"	7"x15 3/16" (6)15/16"RD HOLES
P38	7"	7"x15 3/16" (6)1 1/16"RD HOLES
P45	10"	10"x15 3/16" (6)1"RD HOLES
P60	7 3/4"	7 3/4"x15 3/16" (4)1 5/32"RD-(2)11/16"SQ HOLES

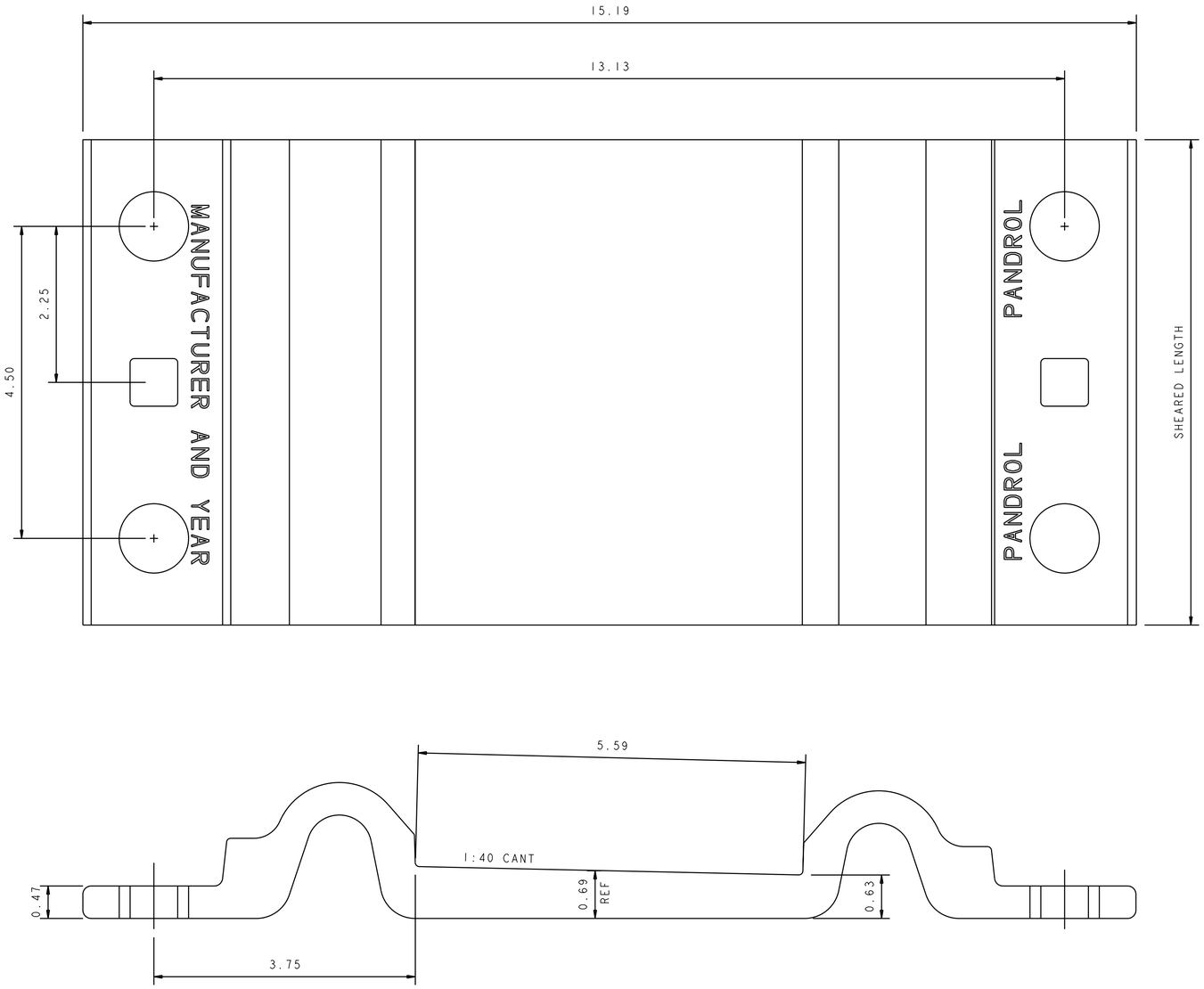

NOTES:

1. ALL HOLE MEASUREMENTS TO BE TAKEN FROM BOTTOM OF PLATE.
2. DRAWING SHOWS COMMONLY MANUFACTURED AND STOCKED SIZES. OTHER SIZES AVAILABLE ON REQUEST.
3. MANUFACTURING DIMENSIONS ARE REFERENCED ON DRAWING 2033.

© THIS DRAWING HAS COPYRIGHT **WHICH IS OWNED BY PANDROL** RAIL FASTENINGS LIMITED. NEITHER THIS DRAWING ITSELF NOR ARTICLE NOR COMPONENT ILLUSTRATED THEREIN MAY BE REPRODUCED IN WHOLE OR IN PART, IN ANY FORM WHATSOEVER WITHOUT PRIOR WRITTEN AUTHORITY FROM PANDROL RAIL FASTENINGS LIMITED. THIS DRAWING HAS BEEN DELIVERED ON THE UNDERSTANDING THAT IT IS NOT USED IN ANY WAY AGAINST THE INTERESTS OF PANDROL RAIL FASTENINGS LIMITED AND WILL BE RETURNED ON DEMAND. "PANDROL" IS A REGISTERED TRADE MARK. "PANDROL" BRAND "PR" CLIPS TYPE "e" CLIPS AND "PANDROL FASTCLIP" ARE SUPPLIED EXCLUSIVELY BY PANDROL RAIL FASTENINGS LIMITED, THEIR SUBSIDIARIES AND ASSOCIATES WORLDWIDE.

TECHNICAL INFORMATION

ALL DIMENSIONS IN	ORIGINAL SCALE
INCHES	FULL

GENERAL TOLERANCES UNLESS OTHERWISE STATED:

0 TO 25 ± | >50 ±
>25 TO 50 ± | ANGLES ±

MATERIAL/FINISH

DRAWN WITH REFERENCE TO BS308
IF IN DOUBT, ASK!
DO NOT SCALE

COPY STATUS

THIS COPY, ALTHOUGH CORRECT AT THE DATE OF ISSUE, WILL NOT BE KEPT UP TO DATE. PANDROL BRAND COMPONENTS ARE UNDER CONTINUOUS DEVELOPMENT. SPECIFIC VARIANTS USUALLY NEED TO BE DEVELOPED TO SUIT SPECIFIC APPLICATIONS AND COMPONENT PARTS WITHIN AN ASSEMBLY NEED TO BE MATCHED TO EACH OTHER TO ENSURE SUCCESSFUL PERFORMANCE. CUSTOMERS AND THEIR PROFESSIONAL ADVISERS INTENDING TO SPECIFY PANDROL BRAND ASSEMBLIES SHOULD REFER TO PANDROL TO CHECK THAT THE DRAWINGS USED AND THE COMPONENTS PROPOSED ARE STILL CURRENT AND CORRECT FOR THE INTENDED APPLICATION. MANUFACTURERS SHOULD CHECK THAT THE DRAWING NUMBER AND ISSUE CODE CORRESPONDS EXACTLY TO THE CODES ON THE PANDROL PURCHASE ORDER.

ISS	MOD.	ISS	MOD.	ISS	MOD.
8	1666	F	5417		
2	1619	F	2560		

ISSUE HISTORY IS AVAILABLE UPON REQUEST

ISSUE STATUS

UNTIL THIS DRAWING IS SIGNED APPROVED BY AN AUTHORISED SIGNATORY, THIS ISSUE MUST BE REGARDED AS **PROVISIONAL**, RELEASED FOR DISCUSSION AND THE DEVELOPMENT OF SAMPLES ONLY.

ISSUE CODE	DRAWN	DATE
G	JJM	27SEP05
	CHECKED: WHG	DATE: 07OCT05
	APPROVED: BC	DATE: 07OCT05

MODIFICATION No.	ORIGINAL DRAWN
5709	BY: JJM DATE: 10DEC93

PANDROL®
PANDROL USA, LP
501 SHARPTOWN ROAD
PO BOX 367, BRIDGEPORT
NEW JERSEY 08014, USA
TELEPHONE:(856) 467-3227
FACSIMILE:(856) 467-2994

TITLE

ROLLED STEEL TIE PLATE TO SUIT 5 1/2" BASE AREMA RAIL

DRAWING No. 6255

FILE REF. No.

SHEET 1 OF 1 A1

PANDROL
TRACK SYSTEMS
a DELACHAUX GROUP

November 21, 2014

Attn: To Whom it May Concern

Re: Pandrol Rolled Steel Tie Plates Available in High Carbon

Several years ago, the Class 1 freight railroads of North America agreed to update their common standards drawings to reflect that all rolled steel tie plates shall be produced in high carbon steel, as defined by AREMA Chapter 5, Section 1.1.3.1 Composition. AREMA defines high carbon tie plates as having a carbon content between 0.350 to 0.850 percent by weight. Previously low carbon steel had been the standard. AREMA defines low carbon tie plates as having a carbon content between 0.15 to 0.349 percent.

As the Class 1 freight railroads are by far the largest consumers of rolled tie steel plates, all Pandrol rolled tie steel plates are now rolled in high carbon. Low carbon steel rolled tie plates are no longer commercially available.

All future Pandrol rolled tie steel plates that are to be produced will be produced to the AREMA guidelines of high carbon tie plates. Pandrol is aware that current specifications for rolled tie plates may call for low carbon plates as defined by AREMA, however this is not an available product. The high carbon rolled steel tie plates will have a higher ultimate tensile strength and a greater fatigue limit over the low carbon rolled steel tie plates. Considering that high carbon rolled steel tie plates are widely used on Class 1 freight railroads without significant issue, they should be acceptable for use on tracks with equivalent or lesser axle load requirements.

Sincerely,

Scott Tripple
Manager, Track Projects
Pandrol USA

PANDROL

Pandrol USA, LP

501 Sharptown Road

P.O. Box 367

Bridgeport, NJ 08014

Phone: 856-467-3227

Fax: 856-467-2994

RAILWORKS® TRACK SERVICES

SUBMITTAL COVER SHEET

First Submittal [X] Date: 2/25/2020

Resubmitted [ ] Date:

Submittal No. 005

Project: Opportunity Corridor
ODOT 173000

Contractor: RailWorks Track Services, Inc.
512 Twin Rail Dr.
Minooka, IL. 60447
815.290.3111

Shop Drawing Title: Pandrol E-Clip

Submittal Description: E-Clips for Pandrol Plates

[ ] Product Data [ ] Test [ ] Schedules [ ] Samples

Manufacturer:

REFERENCES:

Spec Section(s): 34 11 36

Spec Title: Trackwork Fasteners

Drawing Number(s):

Detail Number(s):

ADDITIONAL REMARKS:

Date Required on Site:

CONTRACTORS APPROVAL:

Date: 02.25.20 By: Nithya Rajendran

[X] Submitted product has been reviewed for release to Architect/Engineer.

[X] Submitted product is as specified.

[ ] Submitted is equal to specified product.

RailWorks Track Services, Inc. hereby certifies that the that this submittal has been reviewed and verified with drawings and specifications as noted. Deviations, are as noted.

Signed: Nithya

OWNER APPROVAL:

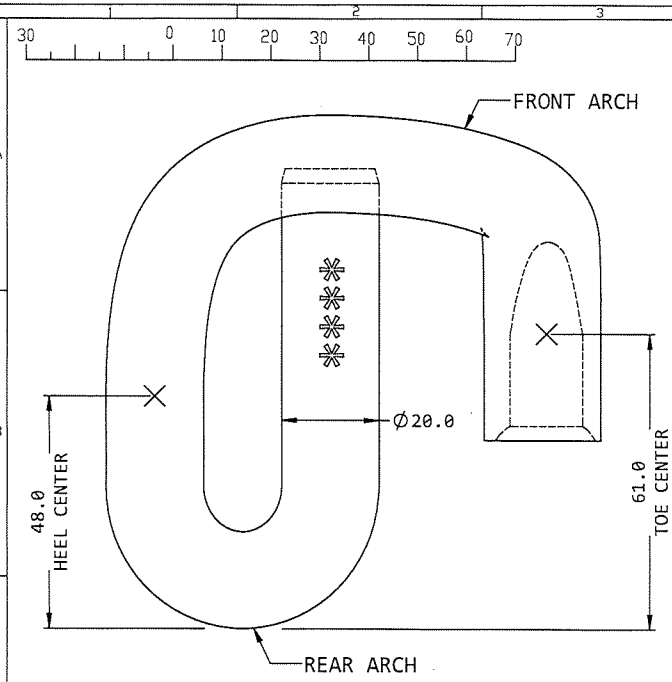

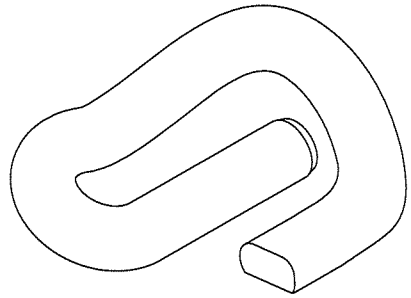

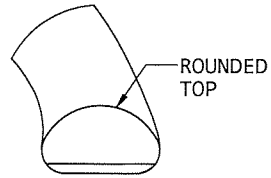

ALTERNATIVE
TOE SHAPE

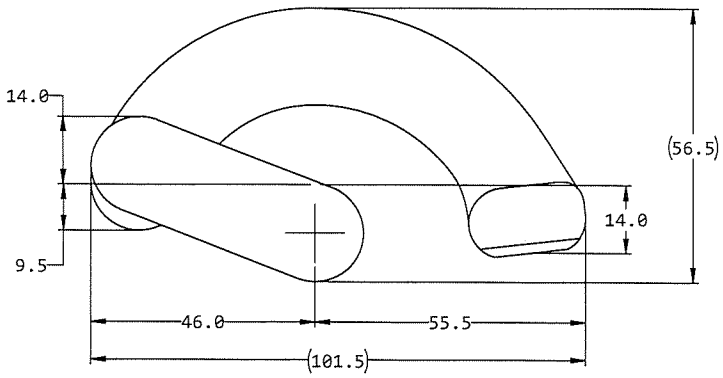

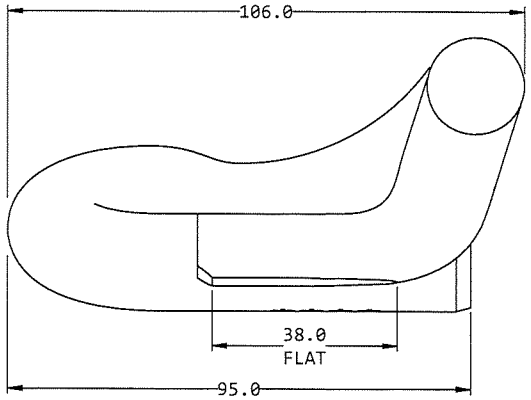

PANDROL RAILTECH
The Railway Division of the Delachaux Group

DRAWN WITH REFERENCE TO BS8888
IF IN DOUBT, ASK!
DO NOT SCALE.

COPY STATUS

THIS COPY, ALTHOUGH CORRECT AT THE DATE OF ISSUE, WILL NOT BE KEPT UP TO DATE. PANDROL BRAND COMPONENTS ARE UNDER CONTINUOUS DEVELOPMENT. SPECIFIC VARIANTS USUALLY NEED TO BE DEVELOPED TO SUIT SPECIFIC APPLICATIONS AND COMPONENT PARTS WITHIN AN ASSEMBLY NEED TO BE MATCHED TO EACH OTHER TO ENSURE SUCCESSFUL PERFORMANCE. CUSTOMERS AND THEIR PROFESSIONAL ADVISERS INTENDING TO SPECIFY PANDROL BRAND ASSEMBLIES SHOULD REFER TO PANDROL TO CHECK THAT THE DRAWINGS USED AND THE COMPONENTS PROPOSED ARE STILL CURRENT AND CORRECT FOR THE INTENDED APPLICATION. MANUFACTURERS SHOULD CHECK THAT THE DRAWING NUMBER AND ISSUE CODE CORRESPONDS EXACTLY TO THE CODES ON THE PANDROL PURCHASE ORDER.

ISSUE STATUS

UNTIL THIS DRAWING IS SIGNED APPROVED BY AN AUTHORISED SIGNATORY, THIS ISSUE MUST BE REGARDED AS PROVISIONAL RELEASED FOR DISCUSSION AND THE DEVELOPMENT OF SAMPLES ONLY.

ISSUE CODE			
F	REVISED BY	T.FINLEY	DATE 06/05/2016
	CHECKED BY	S.TRIPPLE	DATE 06/05/2016
	APPROVED BY	B.COATS	DATE 06/05/2016

IDI/ECR NUMBER	ORIGINAL DRAWN
11031	BY: T.FINLEY DATE: 06/05/2016

PANDROL
TRACK SYSTEMS
a DELACHAUX GROUP

501 SHARPTOWN ROAD, PO BOX 367,
BRIDGEPORT, NEW JERSEY 08014, USA.
TELEPHONE: (856) 467-3227
FACSIMILE: (856) 467-2994
E-MAIL: INFO@PANDROL.COM

TITLE
PANDROL RAIL CLIP TYPE e2055

ALL DIMENSIONS IN MILLIMETERS	ORIGINAL SCALE 1:1	~~GENERAL TOLERANCES UNLESS OTHERWISE STATED~~ TO ±, > ±, > TO ±, ANGLES ±	MATERIAL / FINISH Clip Steel

C	-	E	10208
D	8675	F	11031
ISS	ECR	ISS	ECR

ISSUE CODE HISTORY

DRAWING No. **4218**

FILE REF. No. 65201 | SHEET 1 OF 1 | A3

© THIS DRAWING HAS COPYRIGHT WHICH IS OWNED BY PANDROL LIMITED. NEITHER THIS DRAWING ITSELF NOR ARTICLE NOR COMPONENT ILLUSTRATED THEREIN MAY BE REPRODUCED IN WHOLE OR IN PART, IN ANY FORM WHATSOEVER WITHOUT PRIOR WRITTEN AUTHORITY FROM PANDROL LIMITED. THIS DRAWING HAS BEEN DELIVERED ON THE UNDERSTANDING THAT IT IS NOT USED IN ANY WAY AGAINST THE INTERESTS OF PANDROL LIMITED AND WILL BE RETURNED ON DEMAND. "PANDROL" IS A REGISTERED TRADE MARK. "PANDROL" BRAND "FIX" CLIPS, TYPE "E" CLIPS AND "PANDROL FASTCLIP" ARE SUPPLIED EXCLUSIVELY BY PANDROL LIMITED, THEIR SUBSIDIARIES AND ASSOCIATES WORLDWIDE.

DOCUMENT No.1040 ISS. E

Submittal: 063

Revision: 0
Date Submitted: 3/5/2020
Response Due By: 3/19/2020

kokosing CONSTRUCTION COMPANY, INC.
886 McKinley Ave.
Columbus, OH 43222
Phone: (614) 228-1029
Fax: (614) 228-7065

Project: 16051 - ODOT 173000 CUY IR 490/SR010 (OC3)
Description: GCRTA Material: Timber Crossing

To: Chris Coppock, P.E.
GCRTA – Track Engineer
Email: Christopher.coppock@gcrta.org

From: Oliver Bluestone
Kokosing Construction Company, Inc.
Email: obluestone@kokosing.biz

Submittal Type:	Submitted For:
☐ Engineered Drawings	☒ Approval
☒ Shop Drawings	☐ Record
☐ Working Drawings	☒ Other Verification
☐ CPM Schedule	
☐ Material Certifications / Test Results	**Sent Via:**
☐ Reports	☒ Attached (Electronic)
☐ Product Data/Samples	☐ Attached (Hard Copy)
☐ Other: Meeting Request	

Submittal #	Copies	Spec #	Rev. #	Description	Status
063	1		0	063 – GCRTA Material: Timber Crossing	For Approval

Comments:

Please see the included shop drawings from RailWorks for approval. Let me know if you have any questions or concerns regarding this submittal.

Signed: _____

RAILWORKS® TRACK SERVICES

SUBMITTAL COVER SHEET

First Submittal [X] Date: 3/3/2020

Resubmitted [ ] Date:

Submittal No. 006

Project: Opportunity Corridor
ODOT 173000

Contractor: RailWorks Track Services, Inc.
512 Twin Rail Dr.
Minooka, IL. 60447
815.290.3111

Shop Drawing Title: Solid Timber Panel Crossing

Submittal Description: Full Depth Crossing Panel

[ ] Product Data [ ] Test [ ] Schedules [ ] Samples

Manufacturer:

REFERENCES:

Spec Section(s):

Spec Title:

Drawing Number(s):

Detail Number(s):

ADDITIONAL REMARKS:

Date Required on Site:

CONTRACTORS APPROVAL:

Date: 03.03.20 By: Nithya Rajendran

[X] Submitted product has been reviewed for release to Architect/Engineer.

[X] Submitted product is as specified.

[ ] Submitted is equal to specified product.

RailWorks Track Services, Inc. hereby certifies that the
that this submittal has been reviewed and verified with drawings and specifications as noted. Deviations, are
as noted.

Signed: Nithya

OWNER APPROVAL:

8' length
TPC-1
REV 0

SOLID TIMBER PANEL CROSSING

TOP VIEW INSIDE GAUGE PANEL

WIDTH: 91 ½"

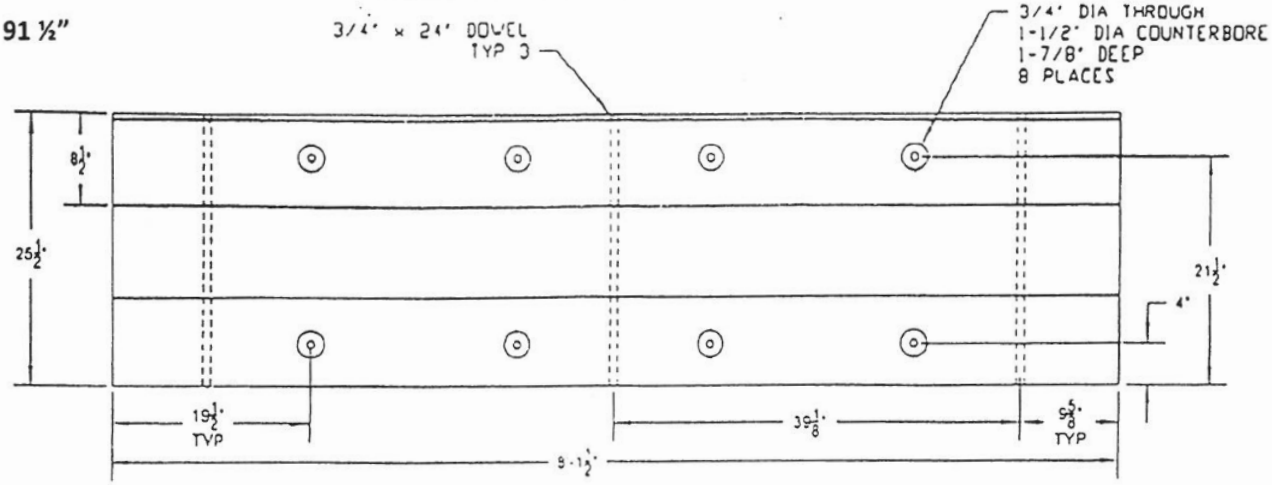

TOP VIEW OUTSIDE FIELD PANEL

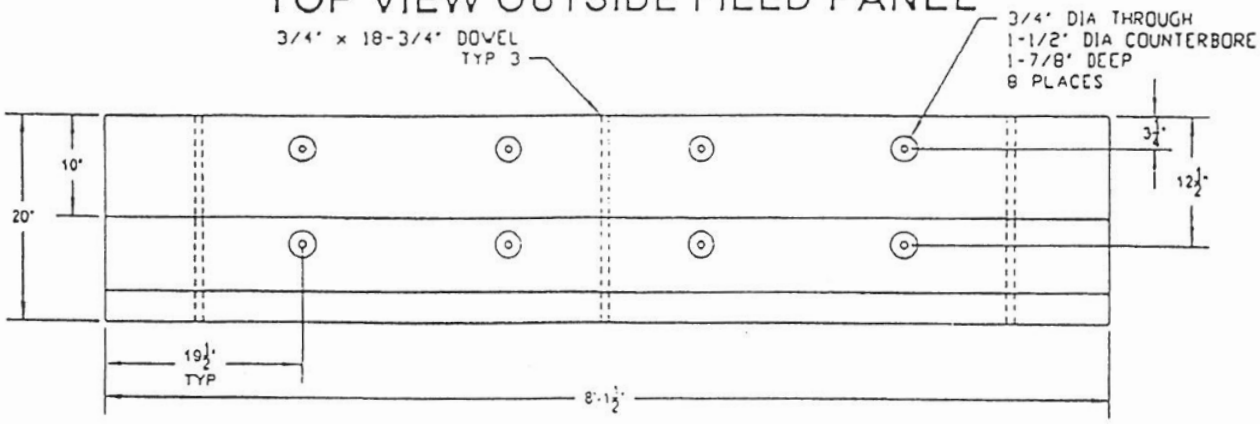

CROSS SECTION (TYPICAL)

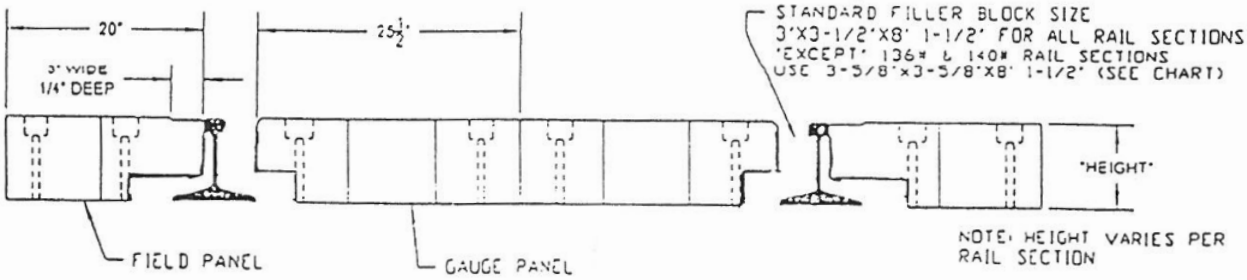

DAP DETAIL

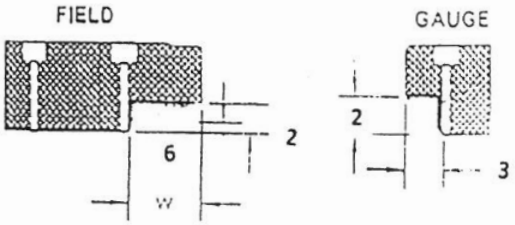

***8' Length, use 19' 3/16" counterboard spacing.**

APPROVED BY: _____ **EFFECTIVE DATE:** _____

Submittal: 072
Revision: 0
Date Submitted: 4/17/2020
Response Due By:

kokosing CONSTRUCTION COMPANY, INC.
886 McKinley Ave.
Columbus, OH 43222
Phone: (614) 228-1029
Fax: (614) 228-7065

Project: 16051 - ODOT 173000 CUY IR 490/SR010 (OC3)
Description: GCRTA Material - Ballast Source and Gradation

To: Chris Coppock, PE
GCRTA – Track Engineer
Email: Christopher.Coppock@gcrta.org

From: Oliver Bluestone
Kokosing Construction Company, Inc.
Email: obluestone@kokosing.biz

Submittal Type:	Submitted For:
☐ Engineered Drawings	☒ Approval
☐ Shop Drawings	☐ Record
☐ Working Drawings	☐ Other
☐ CPM Schedule	
☒ Material Certifications / Test Results	**Sent Via:**
☐ Reports	☒ Attached (Electronic)
☐ Product Data/Samples	☐ Attached (Hard Copy)
☐ Other:	

Submittal #	Copies	Spec #	Rev. #	Description	Status
072	1		0	072 – **GCRTA Material - Ballast Source and Gradation**	For Approval

Comments:

Please see the included ballast source and gradation report from RailWorks for review/approval.

Let me know if you have any questions or concerns regarding this submittal.

Signed: _____

RAILWORKS® TRACK SERVICES

SUBMITTAL COVER SHEET

First Submittal [X] Date: 3/30/2020

Resubmitted [ ] Date:

Submittal No. 008

Project: Opportunity Corridor
ODOT 173000

Contractor: RailWorks Track Services, Inc.
512 Twin Rail Dr.
Minooka, IL. 60447
815.290.3111

Shop Drawing Title:

Submittal Description: Ballast Source and Gradation Report - AREMA #4

[ ] Product Data [ ] Test [ ] Schedules [ ] Samples

Manufacturer:

REFERENCES:

Spec Section(s): 34 11 26

Spec Title: Rail

Drawing Number(s):

Detail Number(s):

ADDITIONAL REMARKS:

Date Required on Site:

CONTRACTORS APPROVAL:

Date: 03.30.20 By: Nithya Rajendran

[X] Submitted product has been reviewed for release to Architect/Engineer.

[X] Submitted product is as specified.

[ ] Submitted is equal to specified product.

RailWorks Track Services, Inc. hereby certifies that the
that this submittal has been reviewed and verified with drawings and specifications as noted. Deviations, are
as noted.

Signed: Nithya

OWNER APPROVAL:

Source: Ontario Trap Rock ~ Bruce Mines, ON

Typical Ballast Gradations

Sieve Designation	Mainline	Walkway
62.5mm (2.5")	100.0	---
53.0mm (2.0")	98.0	---
37.5mm (1.5")	65.2	100.0
25.0mm (1.0")	20.1	98.8
19.0mm (3/4")	8.4	84.6
16.0mm (5/8")	---	57.0
13.2mm (.625")	---	21.4
12.5mm (1/2")	5.0	7.0
9.5mm (3/8")	1.6	1.3
4.75mm (# 4)	1.3	1.1
75um (# 200)	0.5	0.5

Submittal: 077

Revision: 0
Date Submitted: 5/20/2020
Response Due By: 6/3/2020

kokosing CONSTRUCTION COMPANY, INC.
886 McKinley Ave.
Columbus, OH 43222
Phone: (614) 228-1029
Fax: (614) 228-7065

Project: 16051 - ODOT 173000 CUY IR 490/SR010 (OC3)
Description: GCRTA Material - Rail Ties

To: Chris Coppock, PE
GCRTA – Track Engineer
Email: Christopher.Coppock@gcrta.org

From: Oliver Bluestone
Kokosing Construction Company, Inc.
Email: obluestone@kokosing.biz

Submittal Type:	Submitted For:
☐ Engineered Drawings	☒ Approval
☐ Shop Drawings	☐ Record
☐ Working Drawings	☐ Other
☐ CPM Schedule	
☒ Material Certifications / Test Results	**Sent Via:**
☐ Reports	☒ Attached (Electronic)
☐ Product Data/Samples	☐ Attached (Hard Copy)
☐ Other:	

Submittal #	Copies	Spec #	Rev. #	Description	Status
077	1	AREMA	0	077 – GCRTA Material - Rail Ties	For Approval

Comments:

Please see attached material certification submittal received from Rail Works for approval.

Please let me know if you have any questions or concerns regarding this submittal.

Signed: _____

RAILWORKS® TRACK SERVICES

SUBMITTAL COVER SHEET

First Submittal [X] Date: 5/20/2020

Resubmitted [ ] Date:

Submittal No. 009

Project: Opportunity Corridor
ODOT 173000

Contractor: RailWorks Track Services, Inc.
512 Twin Rail Dr.
Minooka, IL. 60447
815.290.3111

Shop Drawing Title:

Submittal Description: Timber Tie Certificate of Compliance

[ ] Product Data [ ] Test [ ] Schedules [ ] Samples

Manufacturer:

REFERENCES:

Spec Section(s): 34 11 33

Spec Title: Ties

Drawing Number(s):

Detail Number(s):

ADDITIONAL REMARKS:

Date Required on Site:

CONTRACTORS APPROVAL:

Date: 05.20.20 By: Nithya Rajendran

[X] Submitted product has been reviewed for release to Architect/Engineer.

[X] Submitted product is as specified.

[ ] Submitted is equal to specified product.

RailWorks Track Services, Inc. hereby certifies that the
that this submittal has been reviewed and verified with drawings and specifications as noted. Deviations, are
as noted.

Signed: Nithya

OWNER APPROVAL:

Stella-JoneS Corporation

Park West One
Suite 500
1000 Cliff Mine Road
Pittsburgh, PA 15275

Phone: (412) 325-0202

CERTIFICATE OF COMPLIANCE

May 18th, 2020

WE HEREBY CERTIFY THAT THE STELLA-JONES WOOD TIES WILL BE MANUFACTURED IN ACCORDANCE WITH AREMA SPECIFICATIONS AND TREATED PER AWPA.

In Reference to: PO # 00408 102388 ON

Furnished to:

RAILWORKS TRACK SERVICES INC
4700 PROPECT AVE E
C/O KOKOSING CONSTRUCTION
CLEVELAND OH 44103

Job: 4080219220 - Kokosing – ODOT Cuyahoga Cnty

Additional Specifications for material furnished are below:

- *Ties manufactured per AREMA recommendations and treated per AWPA standards.*
- 100% End Plated
- Treated with P-2 Creosote American Wood Preserves Association to retention of 8 lbs/cu. ft. or refusal
- Species is 100% Oak
- Ties to be Kerfed

If you should need additional information, please feel free to call us at 1-800-272-8437.

Signed by: Jada Thompson
Jada Thompson
Title: Inside Sales Coordinator

Date: May 18th, 2020

Subscribed and sworn to before me this

18 Day of May 2020

Scott B Uzlik
Notary Public of Pennsylvania

My commission expires March 27, 2023

Commonwealth of Pennsylvania - Notary Seal
Scott B. Uzlik, Notary Public
Allegheny County
My commission expires March 27, 2023
Commission number 1348724
Member, Pennsylvania Association of Notaries

AN EQUAL OPPORTUNITY EMPLOYER

Submittal: 093

Revision: 0
Date Submitted: 7/29/2020
Response Due By: 8/12/2020

kokosing CONSTRUCTION COMPANY, INC.
886 McKinley Ave.
Columbus, OH 43222
Phone: (614) 228-1029
Fax: (614) 228-7065

Project: 16051 - ODOT 173000 CUY IR 490/SR010 (OC3)
Description: GCRTA Material: 36 E Switch Stand & Mechanical Switchman Buffer

To: Chris Coppock, P.E.
GCRTA – Track Engineer
Email: Christopher.Coppock@gcrta.org

From: Oliver Bluestone
Kokosing Construction Company, Inc.
Email: obluestone@kokosing.biz

Submittal Type:	Submitted For:
☐ Engineered Drawings	☒ Approval
☒ Shop Drawings	☐ Record
☐ Working Drawings	☐ Other
☐ CPM Schedule	
☐ Material Certifications / Test Results	**Sent Via:**
☐ Reports	☒ Attached (Electronic)
☐ Product Data/Samples	☐ Attached (Hard Copy)
☐ Other:	

Submittal #	Copies	Spec #	Rev. #	Description	Status
093	1		0	093 – **GCRTA Material: 36 E Switch Stand & Mechanical Switchman Buffer**	For Approval

Comments:

Please see the attached submittal from Rail Works for the 36 E Switch stand and Mechanical Switchman Buffer called for in BU17A.

Please let me know if you have any questions or concerns with this submittal.

Signed: _____

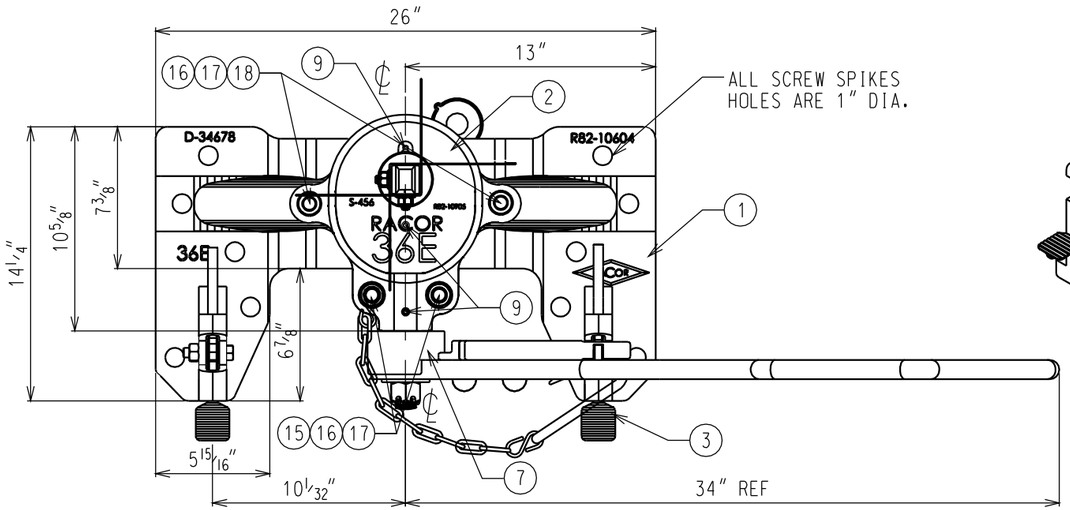

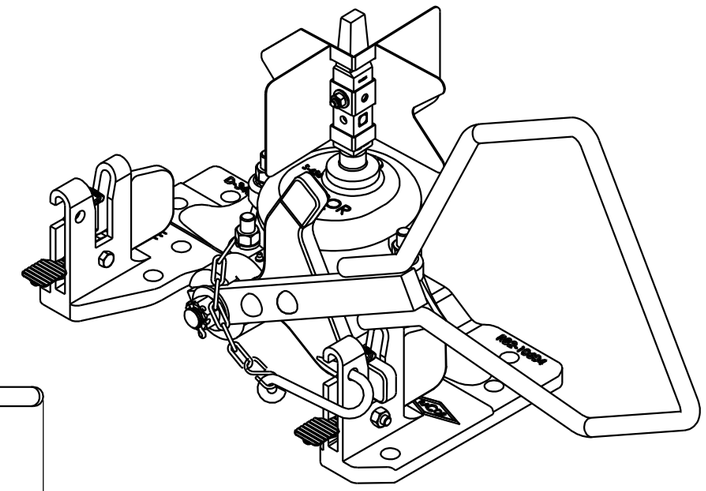

PLAN VIEW

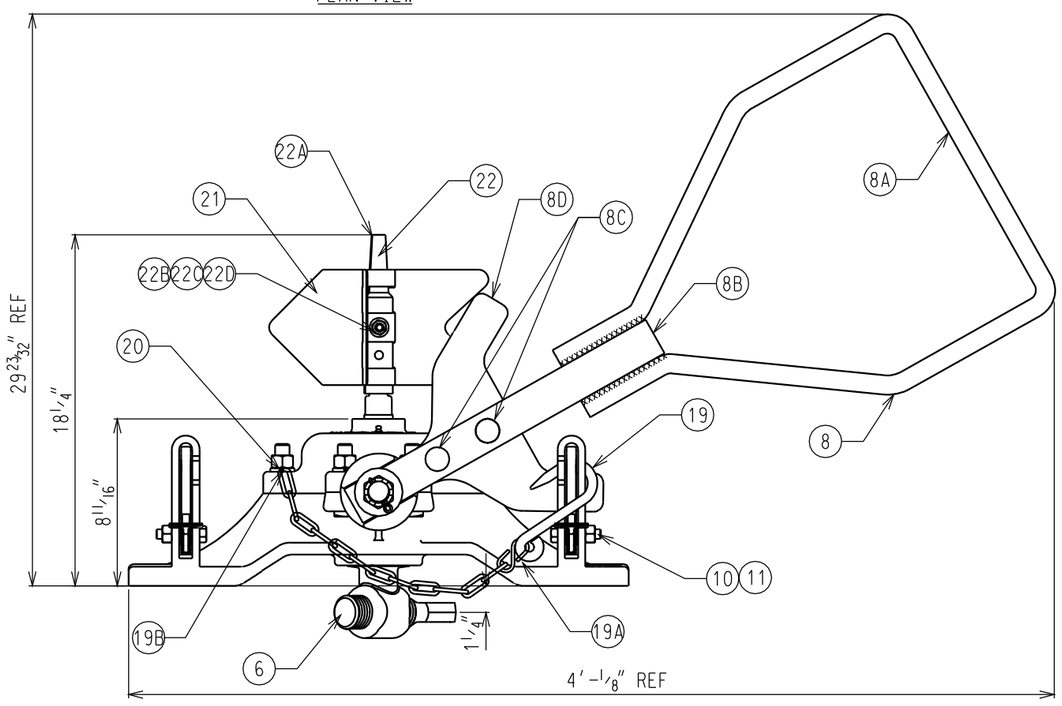

ELEVATION VIEW

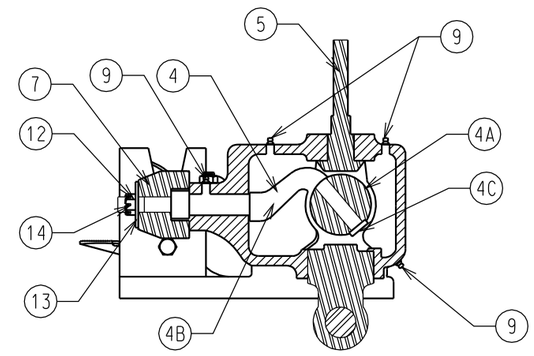

SECTION ON CENTER LINE
STAND HALF THROWN

Mechanical switchman buffer will replace this connecting rod

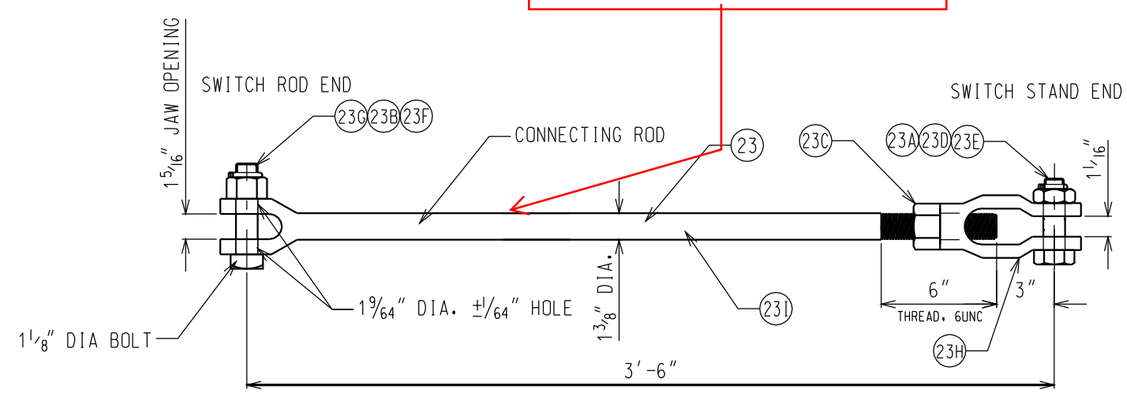

NOTES:
1. IT IS RECOMMENDED THAT SWITCH STAND BE INSPECTED AT LEAST ONCE A YEAR AND ADDED HIGH GRADE WHEEL BEARING AND AXLE GREASE CONFORMING TO ASTM D4950 CATEGORY GC AND LB TO GREASE FITTINGS EVERY FOUR MONTHS. MORE FREQUENT LUBRICATION MAY BE REQUIRED IN BUSY LOCATIONS.
2. RECOMMENDED TIE SPACING 22" +/- 1".
3. STAND IS TO BE PAINTED USING RUST PREVENTATIVE BLACK PAINT.

BILL OF MATERIAL

ITEM	PRODUCT No.	QTY	DESCRIPTION	DRAWING No.
1	R82-10608	1	36E/EH SWITCH STAND BASE MACHINED	R82-10608
2	R82-10650	1	36E SWITCH STAND COVER MACHINED	R82-10650
3	R82-10720	2	FOOT LATCH	R82-10720
4	R82-10666	1	CRANK AND BUSHING ASSEMBLY	R82-10666
4A	R82-10672	1	CRANK MACHINED	R82-10672
4B	R82-10671	1	CRANK BUSHING	R82-10671
4C	V35-40109	1	WASHER FLAT 3/4" X 1 5/8" O.D. X 1/4" THICK	
5	R86-00104	1	SWITCH STAND SPINDLE STANDARD HEIGHT	R86-00104
6	R82-10689	1	CRANK EYE, MACHINED, 1.750" DIA. THREADED.	R82-10689
7	R82-10095	1	ADAPTER HUB BLOCK	D-34629
8	R80-00058	1	36E/EH TRI-HANDLE ASSEMBLY	R80-00058
8A	R80-00052	1	TRI-HANDLE FOR 36 SWITCH STAND	R80-00052
8B	R80-00066	1	TRI-HANDLE SHAFT 1"X2"X18" LONG.	R80-00066
8C	R82-10096	1	YOKE FOR 36 SWITCH STAND.	R82-10096
8D	X99-01006	1	RIVET BUTTON 3/4" X 3" LONG	
9	X99-00327	4	GREASE FITTING 1608-B	
10	V99-20022	2	HEX CAP SCREW, 1/2"-13UNC, 2.25 LONG, HEX HEAD GR5	
11	V30-20030	2	ESNA NUT, 1/2"-13UNC HEAVY HEX, Gr5	
12	V30-70037	1	NUT SLOTTED HVY HEX 1 1/8" DIA.	
13	V35-70252	1	WASHER, FLAT 1 1/8" DIA.	
14	V45-00020	1	COTTER PIN 1/4" DIA. x 2" LONG	
15	V10-41020	2	SQ. HEAD BOLT 3/4" X 3 1/4" LONG	
16	V30-40030	4	SECURITY NUT 3/4"-10	
17	V35-40213	4	SPRING WASHER 3/4"	
18	V10-41043	2	SQ. HEAD BOLT 3/4" X 4 3/4" LONG	
19	B99-70455	1	LOCK HOOK & CHAIN ASSEMBLY FOR 36E & EH SWITCH STAND	B99-70455
19A	X99-70355	1	HOOK AND CHAIN ASSEMBLY FOR 36 SWITCH STAND	X99-70355
19B	R82-11090	1	STANDARD S-HOOK OPEN ENDS	
20	V35-40112	1	FLAT WASHER 3/4"	
21	R88-19511	1	TARGET RED & WHITE INTERLOCK REFLECTORIZED	C-2945
22	R82-10926	1	LAMP TIP ASSEMBLY FOR 36E SWITCH STAND	S-676-1
22A	R82-10076	1	LAMP TIP FOR 36E SWITCH STAND	R82-10076
22B	V10-11200	2	BOLT SQ 3/8"-16UNC-2A X 2" LONG	
22C	V35-10014	2	WASHER FLAT 3/8"	
22D	V35-10030	2	NUT ESNA HEAVY HEX 3/8"-16UNC-2B	
23	R81-00113	1	CONNECTING ROD, 1 5/16" JAW OPENING, BOLT 1 1/8", 3'-6" LONG	ASSEM-5
23A	V99-73036	1	BOLT SHOULDER HEX 1 1/8" DIA., HOLE @ 3 9/32" BELOW HEAD	V99-73036
23B	V30-70010	1	NUT, HVY HEX 1 1/8" DIA.	
23C	V30-90010	1	NUT HVY HEX 1 3/8" DIA.	
23D	V30-60019	1	NUT, JAM HEAVY HEX, 1" DIA.	
23E	V45-00016	1	COTTER PIN, 1/4" X 1 1/2"	
23F	V45-00018	1	COTTER PIN, 1/4" X 1 3/4"	
23G	V10-73201	1	BOLT, SQ. TURNED 1 1/8" DIA., HOLE @ 4 1/8" BELOW HEAD	
23H	R82-10049	1	CNRD PART CLEVIS GL-1872, MACHINED & DRILLED	R82-10049
23I	R82-10018	1	ROD CONNECTING 1 5/16" JAW 4'1" LONG	GL-2015

voestalpine Nortrak

This drawing and the objects represented in it are the exclusive property of voestalpine Nortrak. Reproduction, copying or distribution of this drawing or of the objects is not permitted without our written consent. This drawing may not be used to call for tenders and may not be made available for review by parties other than the recipient.

©2012, VAE NORTRAK ASSOCIATED COMPANIES

REFERENCES:

RACOR 36-E SWITCH STAND
w/RED/WHITE REFLECTORIZED INTERLOCK TARGET
STANDARD HEIGHT VERSION w/3'-6" CONN. ROD

DRAWN BY: MAK	SCALE: 3"=1'-0"	1st PRED.:	
CHECKED BY: DJW	WEIGHT: (LBS.) 235	2nd PRED.:	
APPROVED BY: DJW	CUSTOMER CODE	R36-36017	REV
DATE: MAR 09/2012		SHEET 1 OF 1	

THIS DRAWING AND INFORMATION IS THE PROPERTY OF VOSSLOH
IT MAY NOT BE REPRODUCED, REDRAWN, OR DISTRIBUTED BY OTHERS WITHOUT WRITTEN PERMISSION.

PRELIMINARY DRAWING

REVISIONS			
REV	BY	* DESCRIPTION *	DATE
A	CB	PRELIMINARY DRAWING	XX/XX/XX

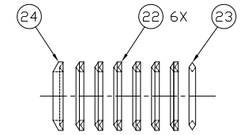

V-RING KITS STACK-UP
EXPLODED VIEW

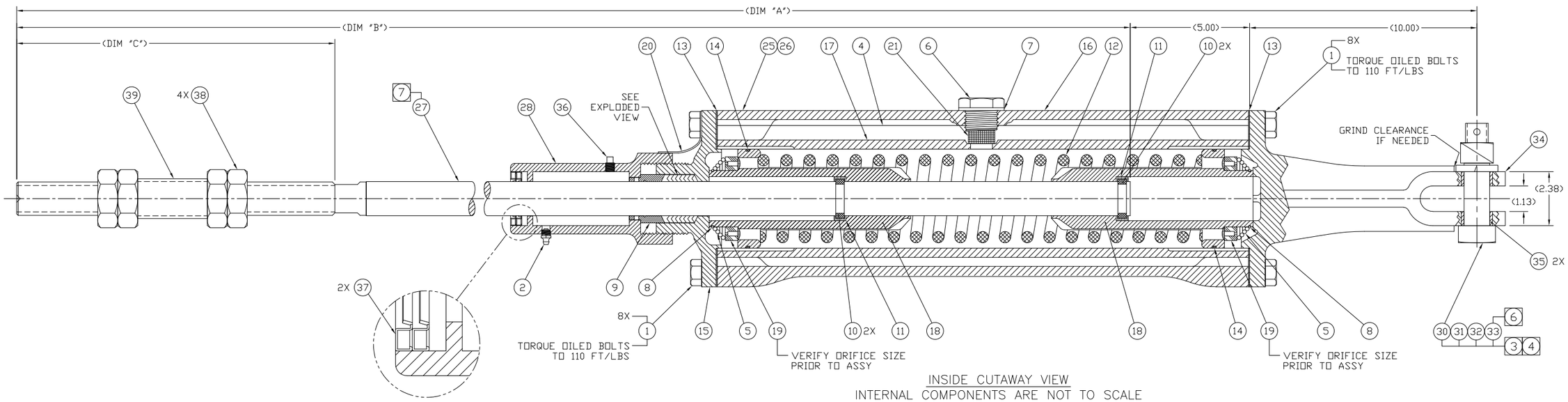

INSIDE CUTAWAY VIEW
INTERNAL COMPONENTS ARE NOT TO SCALE

TABULATION CHART				
ASSY PART NO.	DIM "A" (OAL)	DIM "B"	DIM "C"	ITEM 27 PART NO. & DESCRIPTION
MSB71001A-02	(89.13")	(74.13")	(14.00")	BSH02-043, 74 1/8" LG X 14" THDS

8. WEIGHT APPROX. 245 LBS.

(6) [7] COVER SHAFT AND SHAFT THREADS WITH PLASTIC NETTING FOR SHIPPING.

(5) [6] BEND COTTER PIN ENOUGH FOR SHIPPING ONLY OR ZIP TIE/WIRE TO BOLT HOLE.

(4) 5. FINISH: PRIME AND PAINT EXTERIOR OF BUFFER PARTS BLACK AS PER JSPEC-01-001 & JSPEC-01-002, EXCEPT THDS, SURFACES THAT CONTACT GASKETS, OIL, GREASE AND ITEMS INDICATED BY NOTES 3 & 4.

(3) [4] FINISH: APPLY RUST VETO, TO ITEMS INDICATED, PER JSPEC-01-023.

(2) [3] DO NOT PAINT ITEMS INDICATED.

(1) 2. TEST AS PER JF-1088.

1. ASSEMBLE AS PER DRAWING. ALL ITEMS WITH ** ARE PART OF THE STANDARD PARTS KIT MSB01001K-02

NOTES AND SEQUENCE OF PROCEDURES:

	NO.	PART #	REQ'D	DESCRIPTION / MATERIAL / APPROX SIZE
**	21	SA4-83-001	1	OIL STRAINER
**	20	SA4-82-001	1	RETAINER, PACKING NUT
**	19	SA4-79-001	2	VALVE
**	18	SA4-78-001	2	PISTON
**	17	SA4-77-001	1	CYLINDER
**	16	SA4-76-001	1	HOUSING
**	15	SA4-75-001	1	FRONT CAP
**	14	SA4-69-001	2	PISTON RING, 4-5/8" BORE
**	13	SA4-312-001	2	GASKET, LEAD
**	12	SA4-201-001	1	MAIN SPRING
**	11	SA4-107-001	2	PISTON ROD SHOULDER
**	10	SA4-106-001	4	SHOULDER RETAINER (1 HALF)
**	9	SA4-104-001	1	BUSHING, PACKING NUT
**	8	SA4-103-001	2	VALVE SPRING RETAINER
**	7	SA4-102-001	1	GASKET, FIBER, FOR FILLER PLUG
**	6	SA4-101-001	1	FILLER PLUG
**	5	SA4-100-001	2	VALVE SPRING, CONICAL
**	4	LUB10-000	13.5	OIL, VORTEX 60 (MEASURED IN PINTS)
**	3	LUB09-001	10	GREASE, NOT SHOWN (MEASURED IN OZ.)
**	2	HDF4001-100	1	GREASE FITTING, 1/8", STRAIGHT
**	1	HB20340-100	16	BOLT, 5/8-11 X 1-3/4" LG., HEX HD., FULLY THD'D, GR.5

	NO.	PART #	REQ'D	DESCRIPTION / MATERIAL / APPROX SIZE
	39	PT001-001	1	PIPE THIMBLE, 1-3/4" OD X 3-1/16" LG
	38	HN20093-100	4	NUT, 1-1/2 - 6 HVY. HEX JAM
	37	SEL06-002	2	OIL SEAL (LIP)
	36	HPF3061-100	1	1/8" NPTF PIPE PLUG, SQ. HD.
	35	SA4-196-001	2	BUSHING, BACK CAP, 1-3/8" OD X 1-9/64" ID X 5/8" LG
	34	SA4-294-001	1	BACK CAP, 10" LG, FOR 1-3/8" OD BUSHING
	33	HCP2007-100	1	COTTER PIN, 1/4" X 1-3/4" (BACKCAP & CLEVIS)
	32	HWL2052-100	1	LOCKWASHER, 1-1/8", SPLIT, MED DUTY
	31	HN20100-100	1	NUT, 1-8 HVY SQ (CLEVIS)
	30	SB8-1-004	1	SHOULDER BOLT, 1" THD X 1.125" SHD X 4-1/8" LG
	29			
	28	SA4-81-001	1	PISTON ROD PROTECTOR (LONG PACKING NUT)
	27	SEE TAB CHART	1	BUFFER SHAFT, SEE TAB CHART FOR LENGTH X THDS
**	26	SEL25-000	A/R	3M WEATHER STRIP ADHESIVE, YELLOW OR BLACK
**	25	NP003-001	1	NAME (SERIAL NUMBER) PLATE
**	24	VRG03-003	1	FEMALE V-RING ADAPTER FOR 1-1/2" SHAFT, MOLY COATED
**	23	VRG03-002	1	MALE V-RING ADAPTER FOR 1-1/2" SHAFT, MOLY COATED
**	22	VRG03-001	6	V-RING FOR 1-1/2" SHAFT, MOLY COATED

CUSTOMER:			DRAWN BY: CHUCK BARDLSEY
CUSTOMER # RTA	O.E.M. #	DATE 06/19/2020	PLAN CHECK TOBIN SPOHR
USED ON:	NEXT ASSY:	ITEM #:	FILING CHECK CHUCK BARDLSEY
FILENAME: MSB71XXXA-01.dwg		OLD PART # / OLD FILENAME XC-4945-76	APPROVED BY TOBIN SPOHR

vossloh North America
Vossloh Signaling, Inc.
12799 LOMA RICA DRIVE
GRASS VALLEY, CA 95945
(P) 530.272.8194 (F) 530.272.8303
WWW.VOSSLOH-SIGNALING.COM

TOLERANCE
X/XX=±1/32
.XX =±.01
.XXX=±.005
XX°=±1°
XX.X°=±0.5°

MECHANICAL SWITCHMAN BUFFER
VARIOUS LENGTHS, 10" EXTENDED BACKCAP
W/ PIPE THIMBLE, FOR 36D/36E SWITCH STAND

DWG. NO. MSB71XXXA-02
SHEET NO. 1 of 1